CMOS 4-BIT MICROCONTROLLER

TMP47P201VP

The 47P201V is the system evaluation LSI of 47C101/201 with 16K bits one-time PROM. The 47P201V programs / verifies using an adapter socket to connect with PROM programmer, as it is in TMM27256AD.
In addition, the 47P201V and the 47C101/201 are pin compatible. The 47P201V operates as the same as the 47C101/201 by programming to the internal PROM.

PART No.	ROM	RAM	PACKAGE	ADAPTER SOCKET
TMP47P201VP	OTP 2048 × 8-bit	128 × 4-bit	DIP16-P-300-2.54A	BM1187

PIN ASSIGNMENT (TOP VIEW)

DIP16-P-300-2.54A

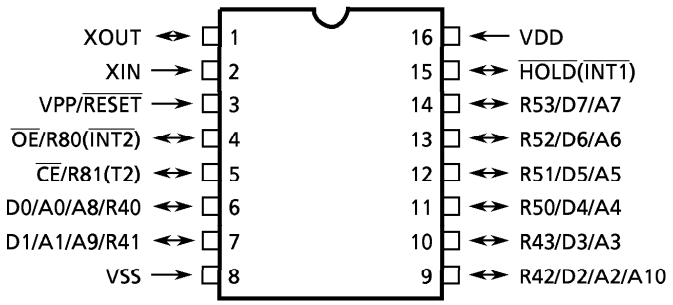

DIP16-P-300-2.54A

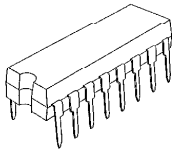

TMP47P201VP

PIN FUNCTION

The 47P201V has MCU mode and PROM mode.

(1) MCU mode

The 47C101/201 and the 47P201V are pin compatible.

(2) PROM mode

PIN NAME	INPUT / OUTPUT	FUNCTIONS	PIN NAME (MCU mode)
D0 / A0 / A8	I/O	Data inputs/outputs or Address inputs	R40
D1 / A1 / A9			R41
D2 / A2 / A10			R42
D3 / A3			R43
D4 / A4			R50
D5 / A5			R51
D6 / A6			R52
D7 / A7			R53
$\overline{OE}$	Input	Output Enable input	R80
$\overline{CE}$		Chip Enable input	R81
VPP	Power supply	+ 12.5 V / 5 V (Program supply voltage)	$\overline{RESET}$
VCC		+ 5 V	VDD
VSS		0 V	VSS
$\overline{HOLD}$	Input	PROM mode setting pin. Be fixed to low level.	$\overline{HOLD}$
XIN	Input	Input the clock from the external oscillator.	
XOUT	Input	PROM control input	

OPERATIONAL DESCRIPTION

The following is an explanation of hardware configuration and operation in relation to the 47P201V. The 47P201V is the same as the 47C101/201 except that an OTP is used instead of a built-in mask ROM.

1. OPERATION mode

The 47P201V has an MCU mode and a PROM mode.

1.1 MCU mode

The MCU mode is set by attaching a resonator between the XIN and XOUT pins. Operation in the MCU mode is the same as for the 47C101/201. In the 47P201V, RC oscillation is impossible.

1.1.1 Program Memory

The program storage area is the same as for the 47C201. Don't use the addresses 400 to $7FF_H$ when using the 47P101V to check 47C101 operation.

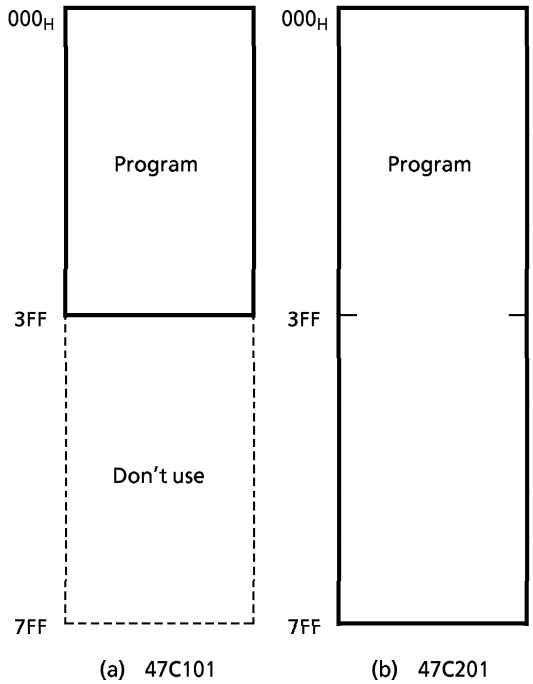

Figure 1-1. Program Area

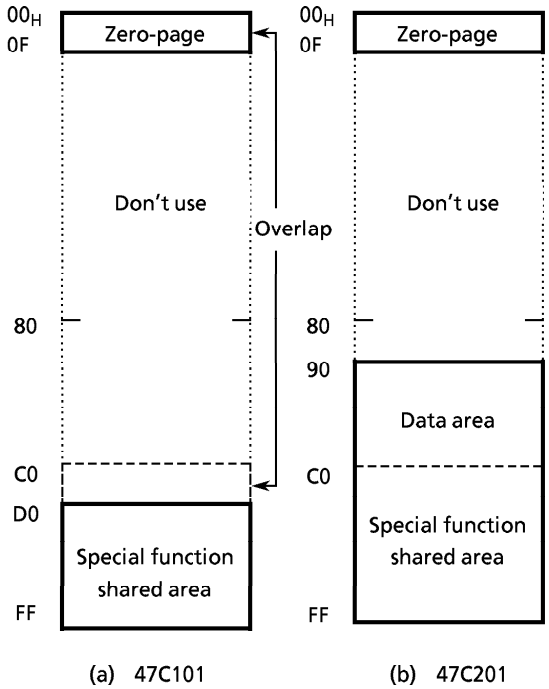

Figure 1-2. RAM Address Assignment

1.1.2 Data Memory

The 47P201V has 128×4-bit of data memory (RAM). When the 47P201V is used as the 47C101/201 evaluator, programming should be performed assuming that the RAM is assigned to address 00 to $0F_H$ and D0 to FF_H for 47C101, and 00 to $0F_H$ and 90 to FF_H for 47C201 as show in Figure 1-2. When the BM4721A (emulator) is used as the 47C101/201 evaluator, it is same.

Further, zero-page (addresses 00 to $0F_H$) and special function shared area (stack location 0-3) are overlapped on the 47C101.

1.1.3 Input/Output Circuitry

(1) Control pins
This is the same as I/O code FA of the 47C101/201. In the 47P201V, RC oscillator is impossible. Connecting the resonator or inputting the extrernal clcok to XIN pin are required when using as evaluator of I/O code FD, FE.

(2) I/O Ports
The input/output circuit of the 47P201V is the same as I/O code FA or FD of the 47C101/201. External resistance, for example, is required when using as evaluator of other I/O codes (FB, FE).

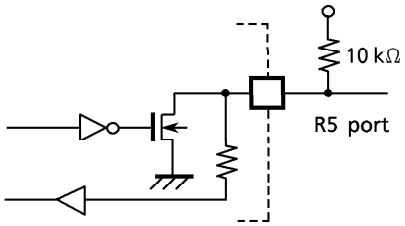

Figure 1-3. I/O code and external circuitry

1.2 PROM mode

The 47P201V enters PROM mode by sending external clock signal from XIN pin when XOUT pin is at low level. In PROM mode, programs can be written or verified using a general-purpose PROM writer with an adapter socket (BM1187) being attached.

With the 47P201V, the PROM address input and data input/output use the same port. PROM mode control signal (XOUT) is used for switching between two functions. XOUT pin becomes control signal input after PROM mode is completed.

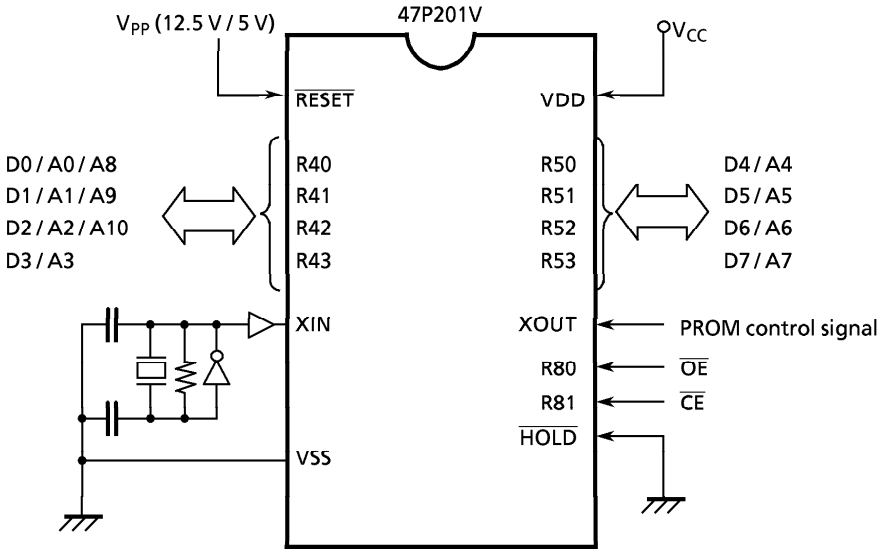

Figure 1-4. Setting for PROM mode

1.2.1 Program Writing

When writing a program, set a ROM type to "27256A" (programming voltage : 12.5 V) . Since the 47P201V has a 2048 × 8-bit internal PROM (000 to $7FF_H$) , set a stop address of a PROM writer to "$7FF_H$" . For a general-purpose PROM writer, use the writer which does not have or can release an electric signature mode.

Note. When the data written to OTP is same as the data of PROM programmer, there is the possibility that the security writing can not be executed, which is depended on the types of PROM programmers.
In this case, set the data of PROM programmer to "00" and execute the security writing after writing the data to OTP.

1.2.2 High Speed Programming Mode

The program time can be greatly decreased by using this high speed programming mode. The device is set up in the high speed programming mode when the programming voltage (+ 12.5 V) is applied to the V_{PP} terminal with V_{CC} = 6 V and $\overline{CE}$ = V_{IH}.

The programming is achieved by applying a single low level 1ms pulse the $\overline{CE}$ input after addresses and data are stable. Then the programmed data is verified by using Program Verify Mode.

If the programmed data is not correct, another program pulse of 1ms is applied and then programmed data is verified. This should be repeated until the program operates correctly (max. 25 times).

After correctly programming the selected address, one additional program pulse with pulse width 3 times that needed for programming is applied.

When programming has been completed, the data in all addresses should be verified with V_{CC} = V_{PP} = 5 V.

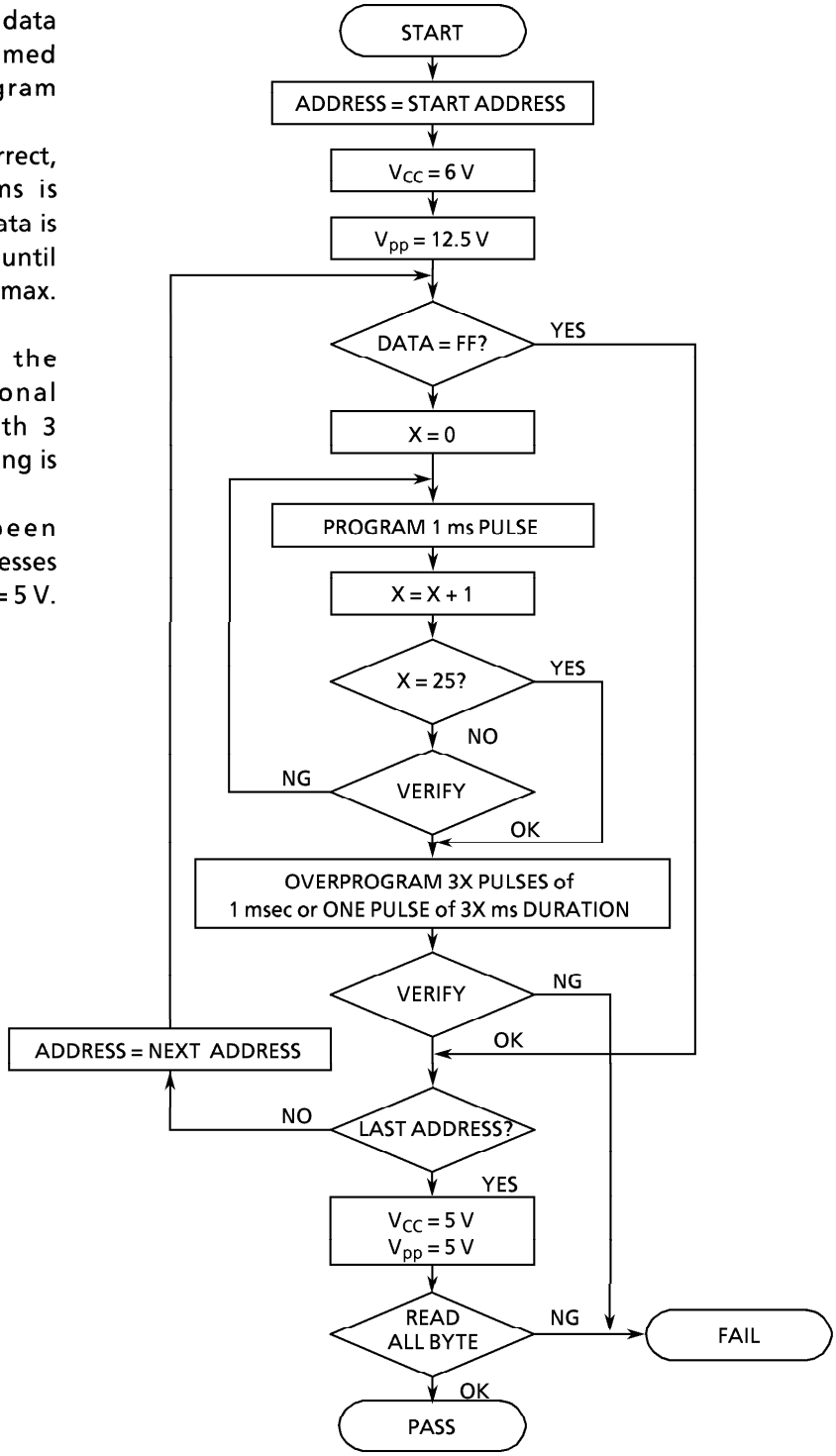

Figure 1-4. FLOW CHART

ELECTRICAL CHARACTERISTICS

ABSOLUTE MAXIMUM RATINGS (V_{SS} = 0 V)

PARAMETER	SYMBOL	PINS	RATING	UNIT
Supply Voltage	V_{DD}		– 0.3 to 6.5	V
Program Voltage	V_{PP}	$\overline{RESET}$/VPP	– 0.3 to 13.0	V
Input Voltage	V_{IN}		– 0.3 to V_{DD} + 0.3	V
Output Voltage	V_{OUT}		– 0.3 to V_{DD} + 0.3	V
Output Current (Per 1 pin)	I_{OUT1}	Port R4	30	mA
	I_{OUT2}	Ports R5, R8, $\overline{HOLD}$	3.2	
Output Current (Total)	ΣI_{OUT1}	Port R4	60	mA
Power Dissipation [T_{opr} = 70 °C]	PD		300	mW
Soldering Temperature (time)	T_{sld}		260 (10 s)	°C
Storage Temperature	T_{stg}		– 55 to 125	°C
Operating Temperature	T_{opr}		– 30 to 70	°C

RECOMMENDED OPERATING CONDITIONS (V_{SS} = 0 V, T_{opr} = – 30 to 70 °C)

PARAMETER	SYMBOL	PINS	CONDITIONS	Min.	Max.	UNIT
Supply Voltage	V_{DD}		fc = 6.0 MHz	4.5	5.5	V
			fc = 4.2 MHz	2.7		
			HOLD mode	2.0		
Input High Voltage	V_{IH1}	Except Hysteresis Input	In the normal operating area	V_{DD} × 0.7	V_{DD}	V
	V_{IH2}	Hysteresis Input		V_{DD} × 0.75		
	V_{IH3}		In the HOLD mode	V_{DD} × 0.9		
Input Low Voltage	V_{IL1}	Except Hysteresis Input	In the normal operating area	0	V_{DD} × 0.3	V
	V_{IL2}	Hysteresis Input			V_{DD} × 0.25	
	V_{IL3}		In the HOLD mode		V_{DD} × 0.1	
Clock Frequency	fc	XIN, XOUT	V_{DD} = 4.5 to 5.5 V	0.4	6.0	MHz
			V_{DD} = 2.7 to 5.5 V		4.2	

D.C. CHARACTERISTICS (V_{SS} = 0 V, T_{opr} = − 30 to 70 °C)

PARAMETER	SYMBOL	PINS	CONDITIONS	Min.	Typ.	Max.	UNIT
Hysteresis Voltage	V_{HS}	Hysteresis Input		–	0.7	–	V
Input Current	I_{IN1}	$\overline{RESET}$, $\overline{HOLD}$	V_{DD} = 5.5 V, V_{IN} = 5.5 V / 0 V	–	–	± 2	μA
	I_{IN2}	Open drain output ports					
Input Resistance	R_{IN}	$\overline{RESET}$		100	220	450	KΩ
Output Leakage Current	I_{LO}	Open drain output ports	V_{DD} = 5.5 V, V_{OUT} = 5.5 V	–	–	2	μA
Output Low Voltage	V_{OL}	Except XOUT and port R4	V_{DD} = 4.5 V, I_{OL} = 1.6 mA	–	–	0.4	V
Output Low Current	I_{OL1}	Port R4	V_{DD} = 4.5 V, V_{OL} = 1.0 V	–	20	–	mA
Supply Current (in the Normal operating mode)	I_{DD}		V_{DD} = 5.5 V, fc = 4 MHz	–	2	4	mA
			V_{DD} = 3.0 V, fc = 4 MHz	–	1	2	
			V_{DD} = 3.0 V, fc = 400 kHz	–	0.5	1	
Supply Current (in the HOLD operating mode)	I_{DDH}		V_{DD} = 5.5 V	–	0.5	10	μA

Note 1. Typ. values show those at T_{opr} = 25 °C, V_{DD} = 5 V.
Note 2. Input Current I_{IN1} : The current through resistor is not included.
Note 3. Supply Current : V_{IN} = 5.3 V / 0.2 V (V_{DD} = 5.5 V) or 2.8 V / 0.2 V (V_{DD} = 3.0 V)

A.C. CHARACTERISTICS

(V_{SS} = 0 V, T_{opr} = – 30 to 70 °C)

PARAMETER	SYMBOL	CONDITIONS		Min.	Typ.	Max.	UNIT
Instruction Cycle Time	t_{cy}		VDD = 4.5 to 5.5 V	1.3	–	20	μs
			VDD = 2.7 to 5.5 V	1.9			
High level Clock pulse Width	t_{WCH}	For external clock operation		80	–	–	ns
Low level Clock pulse Width	t_{WCL}						

RECOMMENDED OSCILLATING CONDITIONS

(V_{SS} = 0 V, V_{DD} = 2.7 to 5.5 V, T_{opr} = – 30 to 70 °C)

Recommended oscillating conditions of the 47P201V are equal to the 47C101/201's but RC oscillation is impossible.

DC/AC CHARACTERISTICS

(V_{SS} = 0 V)

(1) Read Operation

PARAMETER	SYMBOL	CONDITION	Min.	Typ.	Max.	UNIT
Output Level High Voltage	V_{IH4}		V_{CC} × 0.7	–	V_{CC}	V
Output Level Low Voltage	V_{IL4}		0	–	V_{CC} × 0.3	V
Supply Voltage	V_{CC}		4.75	–	6.0	V
Programming Voltage	V_{PP}					
Address Set-up Time	t_{ASU}		350	–	–	ns
Address Access Time	t_{ACC}	V_{CC} = 5.0 ± 0.25 V	–	–	300	ns

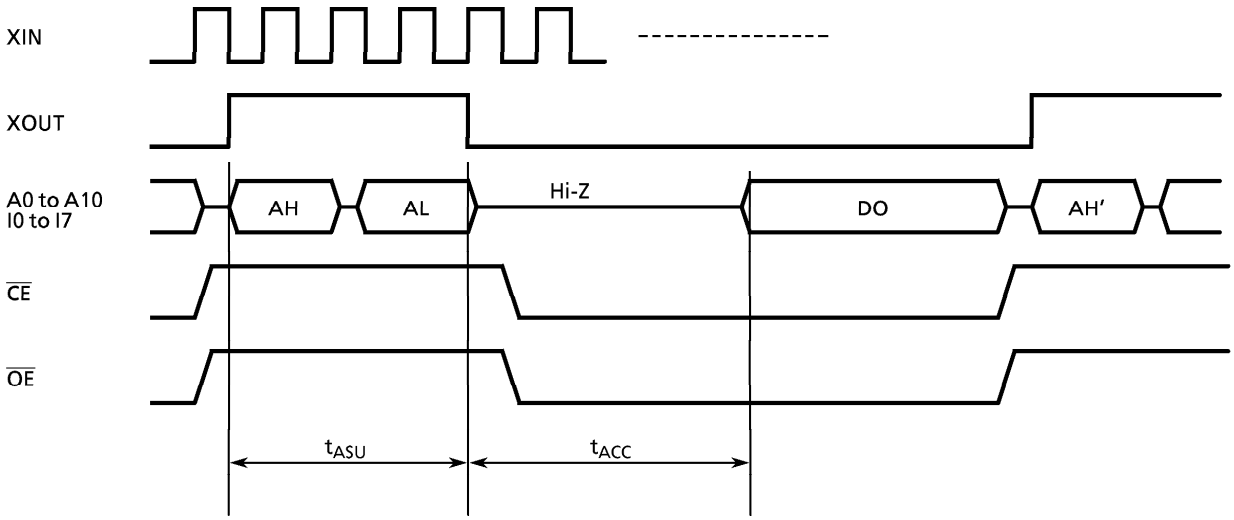

(2) High Speed Programming Operation

PARAMETER	SYBOL	CONDITION	Min.	Typ.	Max.	UNIT
Input High Voltage	V_{IH4}		$V_{CC} \times 0.7$	–	V_{CC}	V
Input Low Voltage	V_{IL4}		0	–	$V_{CC} \times 0.3$	V
Supply Voltage	V_{CC}		4.75	–	6.0	V
V_{PP} Power Supply Voltage	V_{PP}		12.00	12.50	13.00	V
Programming Pulse Width	t_{PW}	$V_{CC} = 6.0 \pm 0.25$ V	0.95	1.0	1.05	ms

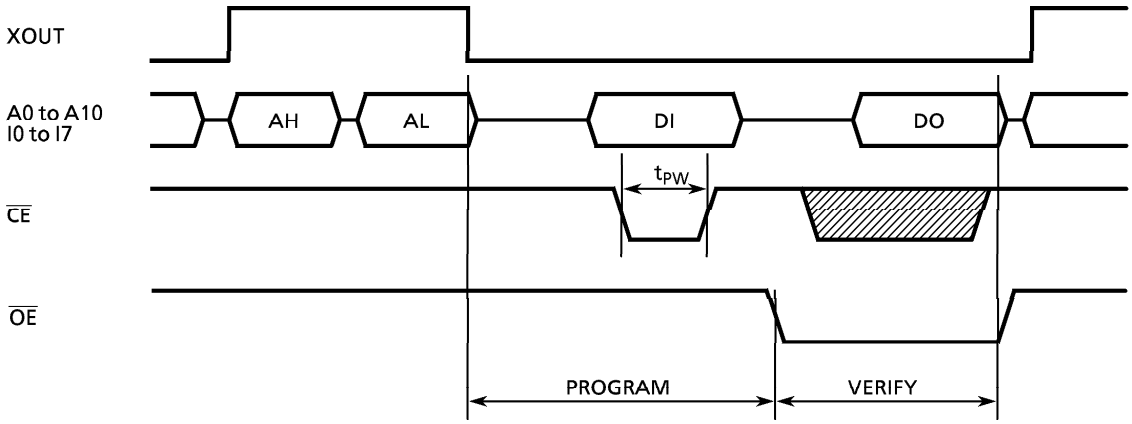

(Note) DO ; Data output (I0 to I7), AL ; Address input (A0 to A7)
DI ; Data input (I0 to I7), AH ; Address input (A8 to A10)

Note. There are some PROMprogrammer types which cannot program OTP.
In TMP47P201V, VPP pin is also used as RESET pin. To set a mode, REST/VPP pin must be set to "low" during 1 ms and more after the rising of power-on and the rising of VDD electrical power.

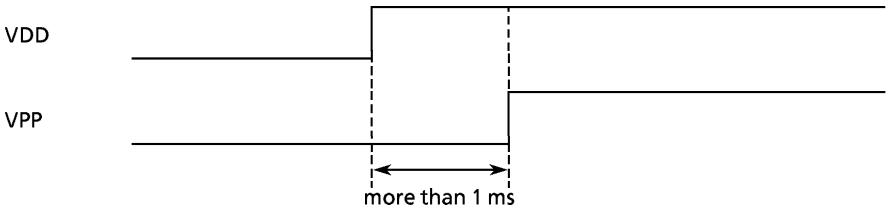

Recommende EPROM programmer

TYPE	
R4945	(ADVANTEST)
UNISITE	(DATA I/O)
AF – 9706	(ANDO)
PECKER – 11	(AVAL DATA)