HA13536F

Three-Phase Brushless DC Motor Driver IC

HITACHI

ADE-207-111B (Z)
3rd Edition
July 1996

Description

The HA13536F is a 3-phase brushless DC motor driver IC with digital speed control. It is being developed for direct drive of the spindle motor of 5 V floppy disk drives with a height of 3/4" or less. It has the following functions and features.

Functions

- 1.0 A per phase, 3-phase drive circuit (current driver)
- Digital speed control circuit
- FG Amp
- Index circuit
- Current limiter circuit
- Over-temperature shutdown circuit (OTSD)

Features

- Low saturation voltage, typically 1.15 V (at 0.7 A)
- Soft switching drive circuit
- No need for an output snubber circuit

Hitachi semiconductor

Pin Arrangement

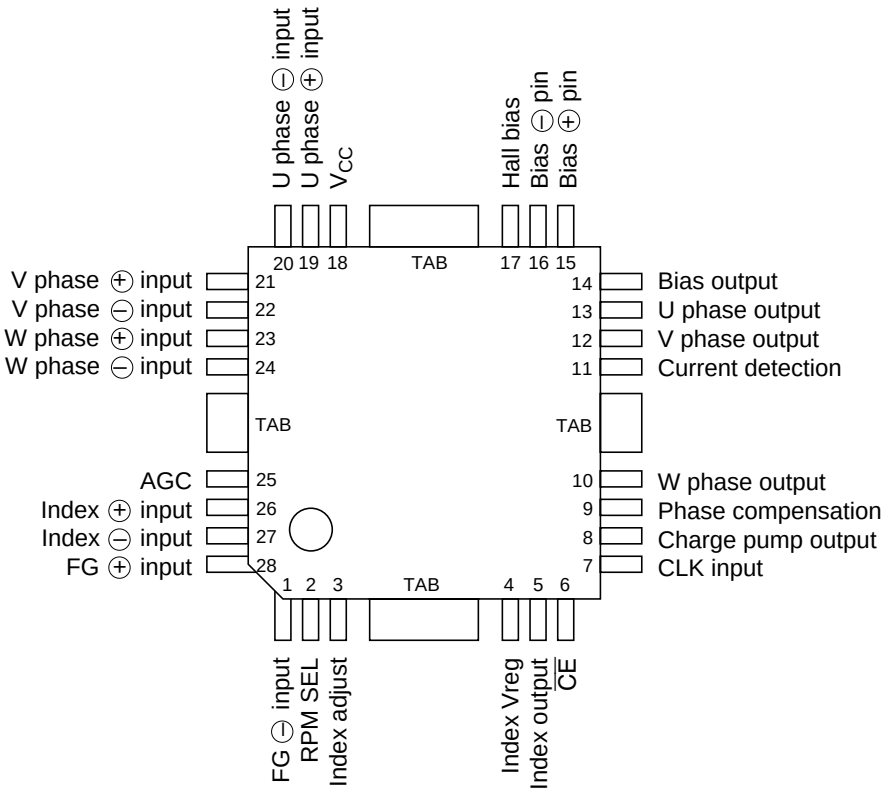

(Top view)

Block Diagram

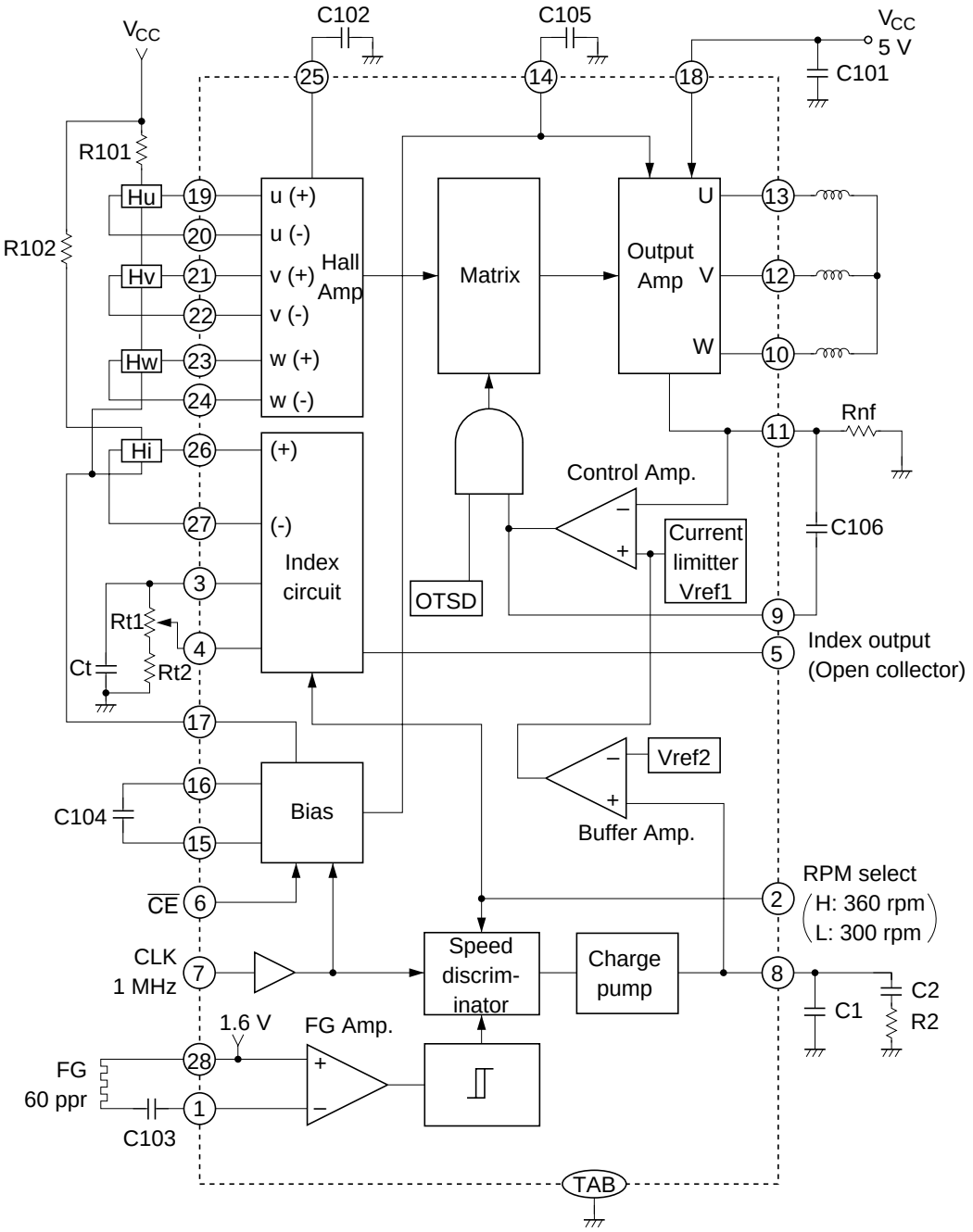

Note : Pin arrangement is preliminary specification.

Pin Function

Pin Number	Pin Name	Function	Pin Voltage
1	FG (–) input	FG Amp. (–) input terminal	
2	RPMSEL	Change terminal for motor rotation speed “L” → 300 rpm, “H” → 360 rpm	V_{TH} = 1.4 V Typ
3	Index adjustment	Terminal to set up burst time of index circuit	0 V Min, 1.2 V Max
4	Index Vreg	Output terminal for fixed voltage of index circuit	1.5 V Typ
5	Index output	Index output terminal (Open collector)	V_{OL} = 0.14 V Typ (@I_O = 2 mA)
6	$\overline{CE}$	Chip enable terminal “L”: enable, “H”: disable	V_{TH} = 1.4 V Typ
7	CLK input	CLK input terminal	V_{TH} = 1.4 V Typ
8	C-PUMP output	Speed error Integration and Phase compensation of speed control	
9	Phase compensation	To prevent the parastic oscillation of output, insert the capacitor between pin 9 and pin 11.	
10	W phase output	W phase output	
11	Current detection	Output current detection and terminal which is connected with phase compensation capacitor for carrent control.	
12	V phase output	V phase output	
13	U phase output	U phase output	
14	Bias output	Bias output terminal	
15	Bias (+) pin	Bias (+) pin terminal	
16	Bias (–) pin	Bias (–) pin terminal	
17	Hall bias	Hall bias terminal $\overline{CE}$ = “L” → Bias, $\overline{CE}$ = “H” → High impedance	2.2 V Typ (@I = 10 mA)
18	V_{CC}	Power supply	4.25 V Min, 6.5 V Max
19	U phase (+) input	U phase (+) input terminal	2.0 V Min, V_{CC} – 0.5 V Max
20	U phase (–) input	U phase (–) input terminal	2.0 V Min, V_{CC} – 0.5 V Max
21	V phase (+) input	V phase (+) input terminal	2.0 V Min, V_{CC} – 0.5 V Max
22	V phase (–) input	V phase (–) input terminal	2.0 V Min, V_{CC} – 0.5 V Max
23	W phase (+) input	W phase (+) input terminal	2.0 V Min, V_{CC} – 0.5 V Max
24	W phase (–) input	W phase (–) input terminal	2.0 V Min, V_{CC} – 0.5 V Max
25	AGC	Hall amp output wave form adjustment terminal (Insert capacitor C102 between GND)	

Pin Function (cont)

Pin Number	Pin Name	Function	Pin Voltage
26	Index (+) input	Index amp (+) input terminal	1.4 V Min, V_{CC} – 0.5 V Max
27	Index (–) input	Index amp (–) input terminal	1.4 V Min, V_{CC} – 0.5 V Max
28	FG (+) input	FG amp (+) input terminal	DC bias 1.6 V Typ

External Parts

Part Number	Recommended Value	Purpose	Notes
R2	—	Integration constant	1
R101	—	Hall bias	
R102	—	Index hall bias	
Rnf	—	Current detection and limitation	2
Rt1	0 to 50 kΩ	Index burst adjustment	3
Rt2	100 kΩ	Index pulse width setting	
C1, C2	—	Integration constants	1
C101	≥ 0.1 µF	Power supply bypass	4
C102	0.1 µF	AGC filter	5
C103	0.47 µF	FG amp. coupling	5
C104	0.1 µF	Bias	
C105	≥ 0.1 µF	Bias	7
C106	0.1 µF	Phase compensation	4
Ct	0.1 µF	Index setting	3, 6

Notes: 1. Determine the integration constants from the following formulas:

$$\omega_O \leq \frac{2\pi f_{FG}}{20} \quad \text{(rad/s)}$$

$$R2 = \frac{1}{9.55} \frac{J\omega_O N_O \cdot Rnf}{K_T Gctl\ Icp} \quad (\Omega)$$

$$C1 = \frac{1}{\sqrt{10}} \frac{1}{\omega_O R2} \quad \text{(F)}$$

$$C2 = 10C1 \quad \text{(F)}$$

In the above formulas:

ω_O = Time constant of servo loop

f_{FG} = FG frequency in Hz

N_O = Motor speed in rpm

J = Motor moment of inertia in kg•cm•s^2

K_T = Motor torque constant in kg•cm/A

Rnf = Current detection in Ω

Gctl = Control amp gain (see Electrical Characteristics)

Icp = Charge pump output current (see Electrical Characteristics)

2. The current limiter operates according to the following formula:

$$I_{OMAX} = \frac{Vref1}{Rnf} \quad (A)$$

where Vref1 is the current limiter reference voltage (see Electrical Characteristics)

3. The burst time t1 is defined as follows:

$t1 \approx -Ct \times Rt1' \times \ln(1 - Vth1(L) / Vreg)$ (RPM select input low)

$t1 \approx -Ct \times Rt1' \times \ln(1 - Vth1(H) / Vreg)$ (RPM select input high)

where Rt1' is resistance value inter 3 to 4 pin.

4. Place as close to the IC as possible.
5. Determine C102 and C103 according to the following formulas:

$$C102 \geq \frac{200}{N_O P} \quad (\mu F)$$

$$C103 \geq \frac{100}{f_{FG}} \quad (\mu F)$$

where

P = Number of motor poles

6. The index pulse width t2 is determined as follows:

$t2 \approx -Ct \times Rt2' \times \ln(Vth1 / Vth2)$

where Vth2 is the threshold voltage (see Electrical Characteristics).

Rt2' : Rt1 (max) + Rt2

7. If the circuit is affected by noise, a large capacitance value should be set.

Timing Waveforms

Hall Amp Input vs. Output Voltage and Current

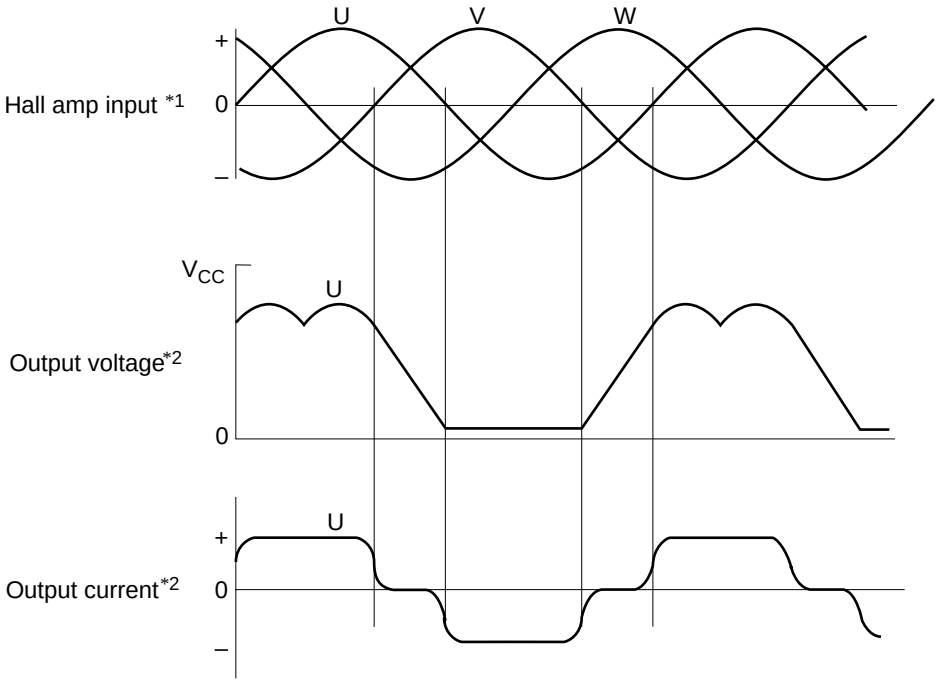

Notes: 1. The input waveforms to the hall amp should be sine waves with a third harmonic content of less than 20%.
2. Only the U phase output is shown.

Index Amp Input vs. Output

- Application 1

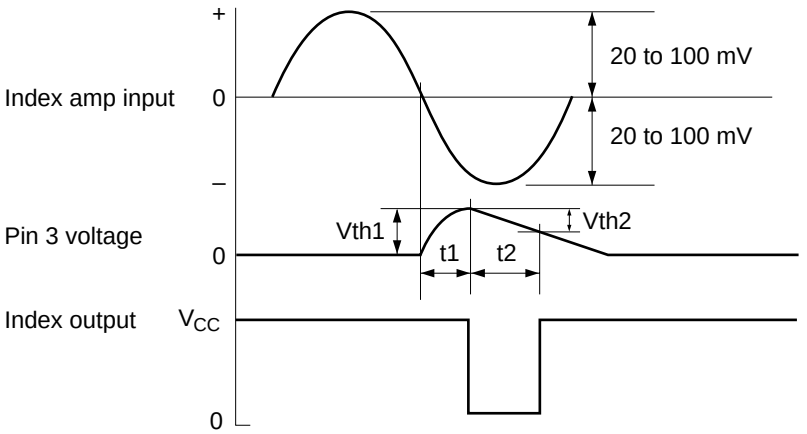

- Application 2

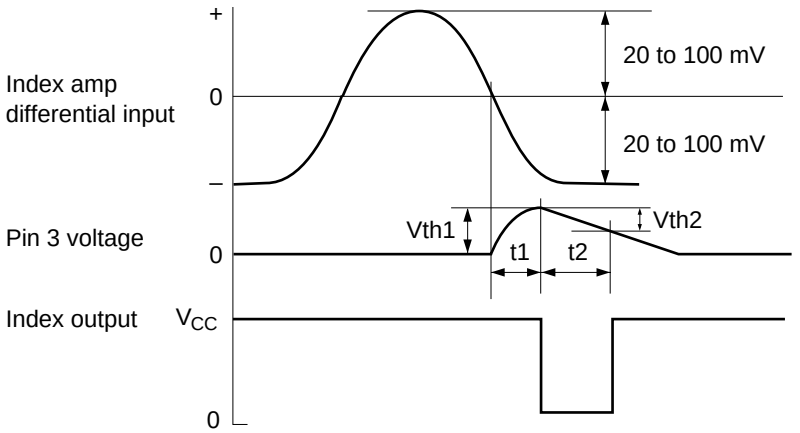

Absolute Maximum Ratings (Ta = 25°C)

Item	Symbol	Value	Unit	Notes
Power supply voltage	V_{CC}	7	V	1
Input voltage	Vin	0 to V_{CC} + 0.3	V	2
Peak output current	I_{OP}	1.0	A	
Normal output current	I_O	0.7	A	
Power dissipation	P_T	1.5	W	3
Junction temperature	Tj	+150	°C	1
Storage temperature range	Tstg	–55 to +125	°C	

Notes: 1. The operating ranges is:
V_{CC} = 4.25 to 6.5 V
Tjopr = 0 to +125°C
2. Applied to the $\overline{CE}$, CLK, and RPM SEL pins.
3. Permissible value when Tpin = 113°C and thermal resistance is as follows:
$\theta_{j-pin} \leq 25$°C/W
$\theta_{j-a1} \leq 55$°C/W (when mounted on a metal substrade)
$\theta_{j-a2} \leq 80$°C/W (when mounted on a glass epoxy substrade)

Electrical Characteristics (Ta = 25°C, V_{CC} = 5 V)

Item		Symbol	Min	Typ	Max	Unit	Test conditions	Pin Nos.	Notes
Quiscent current		I_{CCO}	—	—	0.45	mA	$\overline{CE}$ = H, V_{CC} = 6.5 V	18	
		I_{CC}	—	9	13	mA	$\overline{CE}$ = L, V_{CC} = 6.5 V		
Logic input	Input current (6 pin)	I_{I1}	–80	—	2	µA	$\overline{VCE}$ = 0 to 6.5 V	2, 6, 7	
	Input current (2 pin)	I_{I2}	–2	—	100	µA	V_{RPM} = 5.5 V		
	Input current (7 pin)	I_{I3}	–2	—	450	µA	V_{CLK} = 5.5 V		
	Input low voltage	V_{IL}	0	—	0.8	V			
	Input high voltage	V_{IH}	2.0	—	5.5	V			
Logic output	Output low voltage	V_{OL}	—	—	0.4	V	I_O = 2 mA	5	
	Leakage current	I_{OH}	—	—	±10	µA	V_{CE} = 7.0 V		
Hall amp	Input resistance	Rhi	7	10	13	kΩ		19 to 24	
	Common-mode input voltage range	V_H	2.0	—	V_{CC} – 0.5	V			
	Differential input voltage range	Vh	30	—	160	mV_{PP}			
Output amp	Leakage current	$I_{CER(H)}$	0	—	5	mA	V_O = 7.0 V	10, 12, 13	
		$I_{CER(L)}$	—	—	±100	µA	V_O = 0 V		
	Saturation voltage	Vsat1	—	1.15	1.65	V	I_O = 0.7 A		1
		Vsat2	—	0.6	0.85	V	I_O = 0.35 A		
FG amp and detector	Input voltage range	Vfg	2	—	20	mV_{PP}		1, 28	
	Noise margin	nd	—	—	0.5	mV_{PP}	Differential Noise		
		nc	—	—	0.5	V	COMMON Noise		

Electrical Characteristics (Ta = 25°C, V_{CC} = 5 V) (cont)

Item		Symbol	Min	Typ	Max	Unit	Test conditions	Pin Nos.	Notes
Speed discriminator and charge pump	Number of counts	N	—	1666.5	—	—	PRMSEL = L		
			—	1388.5	—	—	PRMSEL = H		
	Operating frequency	f_{CLK}	0.9	1.0	1.1	MHz		7	
	Leakage current	Ioff	—	—	±50	nA	V8 = 0.8 V	8	
	Output current	Icp+	7	10	13	µA	Speed reduction full scale		
		Icp–	–7	–10	–13	µA	Acceleration full scale		
Current control	Threshold voltage	Vref2	0.55	0.63	0.71	V		8	2
	Voltage gain	Gctl	–12	–10	–8	dB		11	
	Current limitter voltage	Vref1	157	175	193	mV	R_{NF} = 0.47 Ω		
Index circuit	Input voltage (common)	Vindex	1.4	—	V_{CC} – 0.5	V		26, 27	3
	Input voltage (different)	Vindex	40	—	300	mVpp			
	Hysteresis	hys	—	14	—	mV			
	Input current		—	—	±2	µA		3	
	Threshold voltage	Vth1	0.60 × Vreg	0.64 × Vreg	0.68 × Vreg	V	RPM select = L		
			0.54 × Vreg	0.58 × Vreg	0.62 × Vreg	V	RPM select = H		
	Ct discharge threshold voltage	Vth2	0.50 × Vreg	0.54 × Vreg	0.58 × Vreg	V	RPMSEL = L	3	3
			0.44 × Vreg	0.48 × Vreg	0.52 × Vreg	V	RPMSEL = H		
	Bias	Vreg	1.3	1.5	1.7	V	I_O = –0.2 mA	4	
Hall bias	Output voltage	Vhb	1.9	2.2	2.5	V	Ih = 10 mA, $\overline{CE}$ = L	17	

Electrical Characteristics (Ta = 25°C, V_{CC} = 5 V) (cont)

Item		Symbol	Min	Typ	Max	Unit	Test conditions	Pin Nos.	Notes
Hall bias	Leakage current	Ihof	—	—	±10	µA	$\overline{CE}$ = H, Vhb = 7.0 V	17	
OTSD	Operating temperature	Tsd	125	150	—	°C			4

Notes: 1. Total of sink and source.
2. See figure 1. Gctl = ΔVrnf/ΔVcp.
3. Refer to the timing chart.
4. Design parameter only (No test).

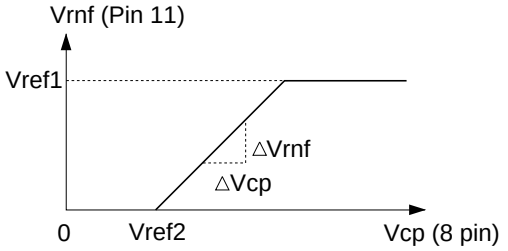

Figure 1

Reference Data

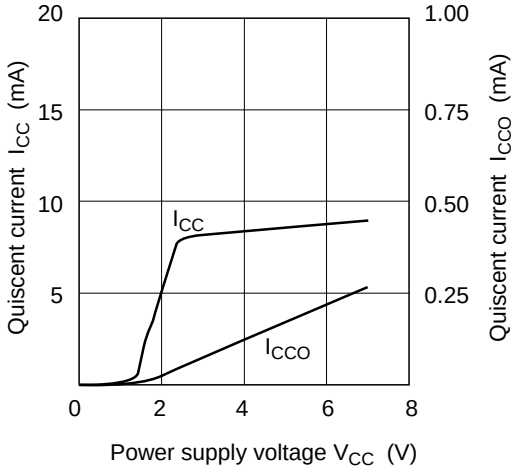

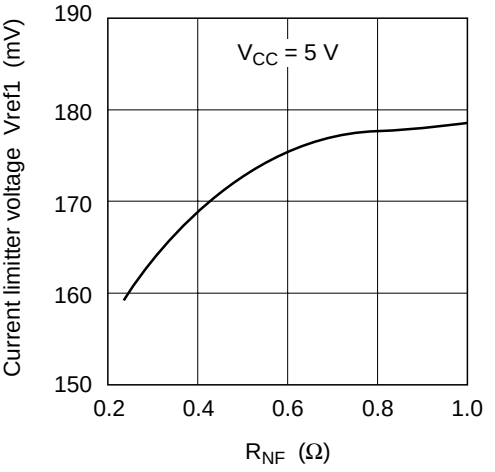

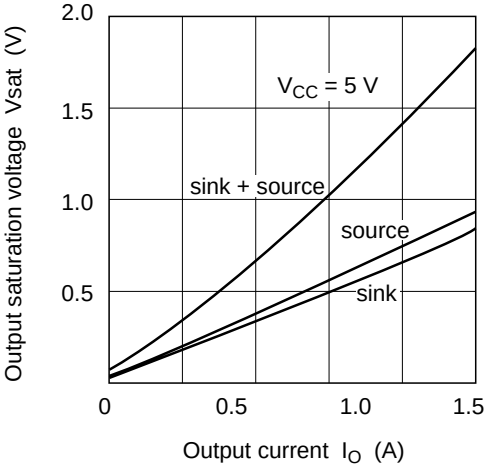

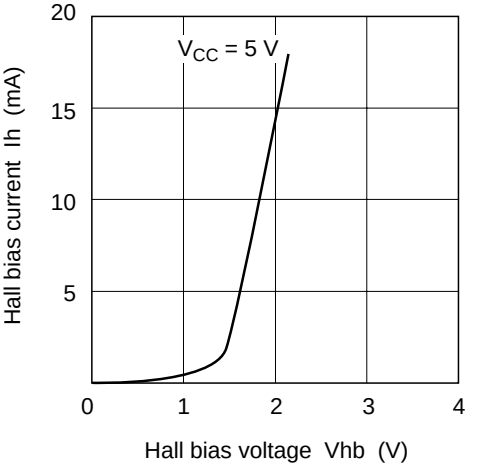

Mount Waveform Characteristics

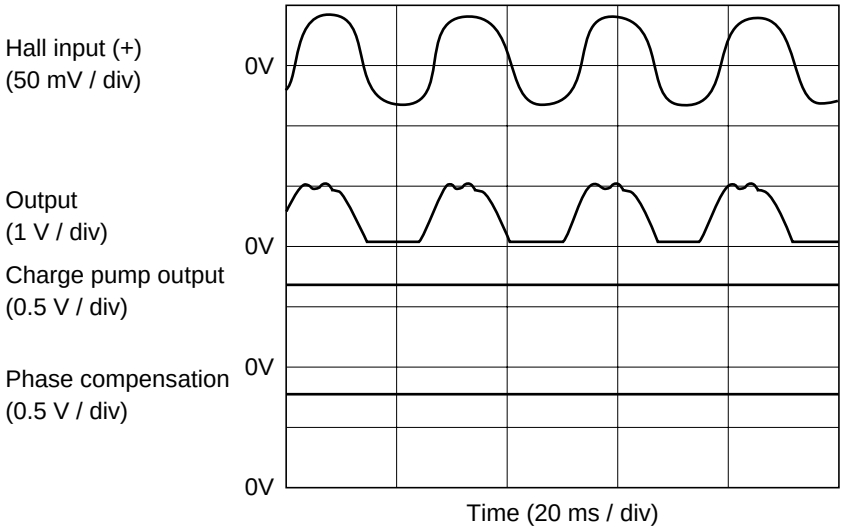

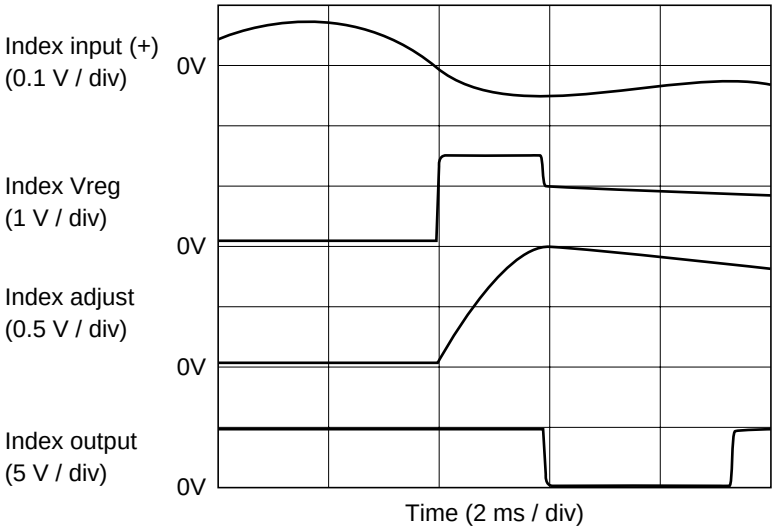

Package Dimensions

Unit: mm

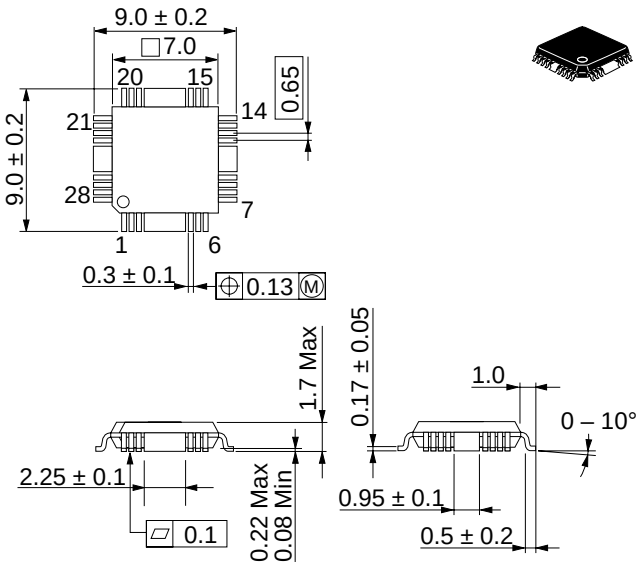

Hitachi code	FP-28T
EIAJ code	—
JEDEC code	—

Cautions

1. Hitachi neither warrants nor grants licenses of any rights of Hitachi's or any third party's patent, copyright, trademark, or other intellectual property rights for information contained in this document. Hitachi bears no responsibility for problems that may arise with third party's rights, including intellectual property rights, in connection with use of the information contained in this document.
2. Products and product specifications may be subject to change without notice. Confirm that you have received the latest product standards or specifications before final design, purchase or use.
3. Hitachi makes every attempt to ensure that its products are of high quality and reliability. However, contact Hitachi's sales office before using the product in an application that demands especially high quality and reliability or where its failure or malfunction may directly threaten human life or cause risk of bodily injury, such as aerospace, aeronautics, nuclear power, combustion control, transportation, traffic, safety equipment or medical equipment for life support.
4. Design your application so that the product is used within the ranges guaranteed by Hitachi particularly for maximum rating, operating supply voltage range, heat radiation characteristics, installation conditions and other characteristics. Hitachi bears no responsibility for failure or damage when used beyond the guaranteed ranges. Even within the guaranteed ranges, consider normally foreseeable failure rates or failure modes in semiconductor devices and employ systemic measures such as fail-safes, so that the equipment incorporating Hitachi product does not cause bodily injury, fire or other consequential damage due to operation of the Hitachi product.
5. This product is not designed to be radiation resistant.
6. No one is permitted to reproduce or duplicate, in any form, the whole or part of this document without written approval from Hitachi.
7. Contact Hitachi's sales office for any questions regarding this document or Hitachi semiconductor products.

HITACHI

Hitachi, Ltd.
Semiconductor & Integrated Circuits.
Nippon Bldg., 2-6-2, Ohte-machi, Chiyoda-ku, Tokyo 100-0004, Japan
Tel: Tokyo (03) 3270-2111 Fax: (03) 3270-5109

URL
NorthAmerica : http:semiconductor.hitachi.com/
Europe : http://www.hitachi-eu.com/hel/ecg
Asia (Singapore) : http://www.has.hitachi.com.sg/grp3/sicd/index.htm
Asia (Taiwan) : http://www.hitachi.com.tw/E/Product/SICD_Frame.htm
Asia (HongKong) : http://www.hitachi.com.hk/eng/bo/grp3/index.htm
Japan : http://www.hitachi.co.jp/Sicd/indx.htm

For further information write to:

Hitachi Semiconductor (America) Inc.
179 East Tasman Drive,
San Jose,CA 95134
Tel: <1> (408) 433-1990
Fax: <1>(408) 433-0223

Hitachi Europe GmbH
Electronic components Group
Dornacher Stra§e 3
D-85622 Feldkirchen, Munich
Germany
Tel: <49> (89) 9 9180-0
Fax: <49> (89) 9 29 30 00

Hitachi Europe Ltd.
Electronic Components Group.
Whitebrook Park
Lower Cookham Road
Maidenhead
Berkshire SL6 8YA, United Kingdom
Tel: <44> (1628) 585000
Fax: <44> (1628) 778322

Hitachi Asia Pte. Ltd.
16 Collyer Quay #20-00
Hitachi Tower
Singapore 049318
Tel: 535-2100
Fax: 535-1533

Hitachi Asia Ltd.
Taipei Branch Office
3F, Hung Kuo Building. No.167,
Tun-Hwa North Road, Taipei (105)
Tel: <886> (2) 2718-3666
Fax: <886> (2) 2718-8180

Hitachi Asia (Hong Kong) Ltd.
Group III (Electronic Components)
7/F., North Tower, World Finance Centre,
Harbour City, Canton Road, Tsim Sha Tsui,
Kowloon, Hong Kong
Tel: <852> (2) 735 9218
Fax: <852> (2) 730 0281
Telex: 40815 HITEC HX

Copyright ' Hitachi, Ltd., 1999. All rights reserved. Printed in Japan.