# NTD3055-094

# Power MOSFET
# 12 Amps, 60 Volts
## N–Channel DPAK

Designed for low voltage, high speed switching applications in power supplies, converters and power motor controls and bridge circuits.

**Features**

- Lower $R_{DS(on)}$
- Lower $V_{DS(on)}$
- Lower and Tighter $V_{SD}$
- Lower Diode Reverse Recovery Time
- Lower Reverse Recovery Stored Charge

**Typical Applications**

- Power Supplies
- Converters
- Power Motor Controls
- Bridge Circuits

**MAXIMUM RATINGS** ($T_J$ = 25°C unless otherwise noted)

| Rating | Symbol | Value | Unit |
|---|---|---|---|
| Drain–to–Source Voltage | $V_{DSS}$ | 60 | Vdc |
| Drain–to–Gate Voltage ($R_{GS}$ = 10 MΩ) | $V_{DGR}$ | 60 | Vdc |
| Gate–to–Source Voltage<br>– Continuous<br>– Non–Repetitive ($t_p \leq 10$ ms) | <br>$V_{GS}$<br>$V_{GS}$ | <br>±20<br>±30 | Vdc |
| Drain Current<br>– Continuous @ $T_A$ = 25°C<br>– Continuous @ $T_A$ = 100°C<br>– Single Pulse ($t_p \leq 10$ µs) | <br>$I_D$<br>$I_D$<br>$I_{DM}$ | <br>12<br>10<br>45 | <br>Adc<br><br>Apk |
| Total Power Dissipation @ $T_A$ = 25°C<br>Derate above 25°C<br>Total Power Dissipation @ $T_A$ = 25°C (Note 1)<br>Total Power Dissipation @ $T_A$ = 25°C (Note 2) | $P_D$ | 48<br>0.32<br>2.1<br>1.5 | W<br>W/°C<br>W<br>W |
| Operating and Storage Temperature Range | $T_J$, $T_{stg}$ | –55 to +175 | °C |
| Single Pulse Drain–to–Source Avalanche Energy – Starting $T_J$ = 25°C<br>($V_{DD}$ = 25 Vdc, $V_{GS}$ = 10 Vdc, L = 1.0 mH<br>$I_{L(pk)}$ = 11 A, $V_{DS}$ = 60 Vdc) | $E_{AS}$ | 61 | mJ |
| Thermal Resistance<br>– Junction–to–Case<br>– Junction–to–Ambient (Note 1)<br>– Junction–to–Ambient (Note 2) | <br>$R_{\theta JC}$<br>$R_{\theta JA}$<br>$R_{\theta JA}$ | <br>3.13<br>71.4<br>100 | <br>°C/W |
| Maximum Lead Temperature for Soldering Purposes, 1/8″ from case for 10 seconds | $T_L$ | 260 | °C |

1. When surface mounted to an FR4 board using 1″ pad size, (Cu Area 1.127 in$^2$).
2. When surface mounted to an FR4 board using the minimum recommended pad size, (Cu Area 0.412 in$^2$).

ON Semiconductor™

http://onsemi.com

**12 AMPERES**
**60 VOLTS**
**$R_{DS(on)}$ = 94 mΩ**

**N–Channel**

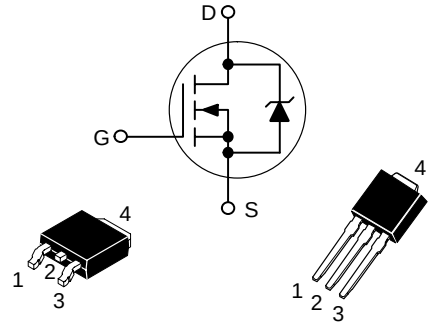


**CASE 369A DPAK (Bent Lead) STYLE 2**

**CASE 369 DPAK (Straight Lead) STYLE 2**

NTD3055–094 = Device Code
Y = Year
WW = Work Week

**MARKING DIAGRAMS & PIN ASSIGNMENTS**

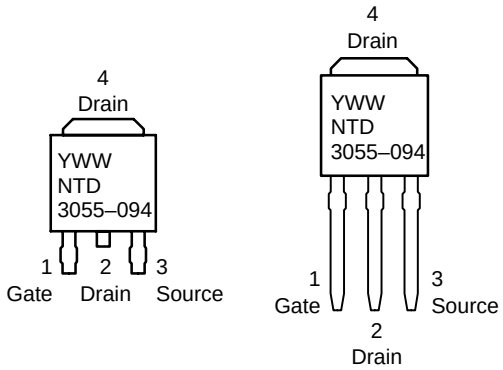


**ORDERING INFORMATION**

| Device | Package | Shipping |
|---|---|---|
| NTD3055–094 | DPAK | 75 Units/Rail |
| NTD3055–094–1 | DPAK Straight Lead | 75 Units/Rail |
| NTD3055–094T4 | DPAK | 2500/Tape & Reel |



September, 2001 – Rev. 2
Publication Order Number:
NTD3055–094/D

**ELECTRICAL CHARACTERISTICS** ($T_J$ = 25°C unless otherwise noted)

| Characteristic | | Symbol | Min | Typ | Max | Unit |
|---|---|---|---|---|---|---|
| **OFF CHARACTERISTICS** | | | | | | |
| Drain–to–Source Breakdown Voltage (Note 3)<br>($V_{GS}$ = 0 Vdc, $I_D$ = 250 μAdc)<br>Temperature Coefficient (Positive) | | $V_{(BR)DSS}$ | <br>60<br>– | <br>68<br>54.4 | <br>–<br>– | Vdc<br><br>mV/°C |
| Zero Gate Voltage Drain Current<br>($V_{DS}$ = 60 Vdc, $V_{GS}$ = 0 Vdc)<br>($V_{DS}$ = 60 Vdc, $V_{GS}$ = 0 Vdc, $T_J$ = 150°C) | | $I_{DSS}$ | <br>–<br>– | <br>–<br>– | <br>1.0<br>10 | μAdc |
| Gate–Body Leakage Current ($V_{GS}$ = ±20 Vdc, $V_{DS}$ = 0 Vdc) | | $I_{GSS}$ | – | – | ±100 | nAdc |
| **ON CHARACTERISTICS** (Note 3) | | | | | | |
| Gate Threshold Voltage (Note 3)<br>($V_{DS}$ = $V_{GS}$, $I_D$ = 250 μAdc)<br>Threshold Temperature Coefficient (Negative) | | $V_{GS(th)}$ | <br>2.0<br>– | <br>2.9<br>6.3 | <br>4.0<br>– | Vdc<br><br>mV/°C |
| Static Drain–to–Source On–Resistance (Note 3)<br>($V_{GS}$ = 10 Vdc, $I_D$ = 6.0 Adc) | | $R_{DS(on)}$ | <br>– | <br>84 | <br>94 | mOhm |
| Static Drain–to–Source On–Voltage (Note 3)<br>($V_{GS}$ = 10 Vdc, $I_D$ = 12 Adc)<br>($V_{GS}$ = 10 Vdc, $I_D$ = 6.0 Adc, $T_J$ = 150°C) | | $V_{DS(on)}$ | <br>–<br>– | <br>0.85<br>0.77 | <br>1.35<br>– | Vdc |
| Forward Transconductance (Note 3) ($V_{DS}$ = 7.0 Vdc, $I_D$ = 6.0 Adc) | | $g_{FS}$ | – | 6.7 | – | mhos |
| **DYNAMIC CHARACTERISTICS** | | | | | | |
| Input Capacitance | ($V_{DS}$ = 25 Vdc, $V_{GS}$ = 0 Vdc, f = 1.0 MHz) | $C_{iss}$ | – | 323 | 450 | pF |
| Output Capacitance | | $C_{oss}$ | – | 107 | 150 | |
| Transfer Capacitance | | $C_{rss}$ | – | 34 | 70 | |
| **SWITCHING CHARACTERISTICS** (Note 4) | | | | | | |
| Turn–On Delay Time | ($V_{DD}$ = 48 Vdc, $I_D$ = 12 Adc, $V_{GS}$ = 10 Vdc, $R_G$ = 9.1 Ω) (Note 3) | $t_{d(on)}$ | – | 7.7 | 15 | ns |
| Rise Time | | $t_r$ | – | 32.3 | 70 | |
| Turn–Off Delay Time | | $t_{d(off)}$ | – | 25.2 | 50 | |
| Fall Time | | $t_f$ | – | 23.9 | 50 | |
| Gate Charge | ($V_{DS}$ = 48 Vdc, $I_D$ = 12 Adc, $V_{GS}$ = 10 Vdc) (Note 3) | $Q_T$ | – | 10.9 | 20 | nC |
| | | $Q_1$ | – | 3.1 | – | |
| | | $Q_2$ | – | 4.2 | – | |
| **SOURCE−DRAIN DIODE CHARACTERISTICS** | | | | | | |
| Forward On–Voltage | ($I_S$ = 12 Adc, $V_{GS}$ = 0 Vdc) (Note 3)<br>($I_S$ = 12 Adc, $V_{GS}$ = 0 Vdc, $T_J$ = 150°C) | $V_{SD}$ | –<br>– | 0.94<br>0.82 | 1.15<br>– | Vdc |
| Reverse Recovery Time | ($I_S$ = 12 Adc, $V_{GS}$ = 0 Vdc, $dI_S/dt$ = 100 A/μs) (Note 3) | $t_{rr}$ | – | 33.1 | – | ns |
| | | $t_a$ | – | 24 | – | |
| | | $t_b$ | – | 8.9 | – | |
| Reverse Recovery Stored Charge | | $Q_{RR}$ | – | 0.047 | – | μC |

3. Pulse Test: Pulse Width ≤ 300 μs, Duty Cycle ≤ 2%.
4. Switching characteristics are independent of operating junction temperatures.

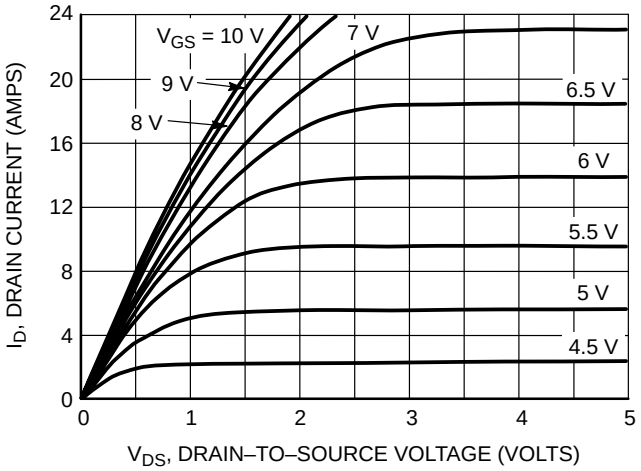


**Figure 1. On–Region Characteristics**

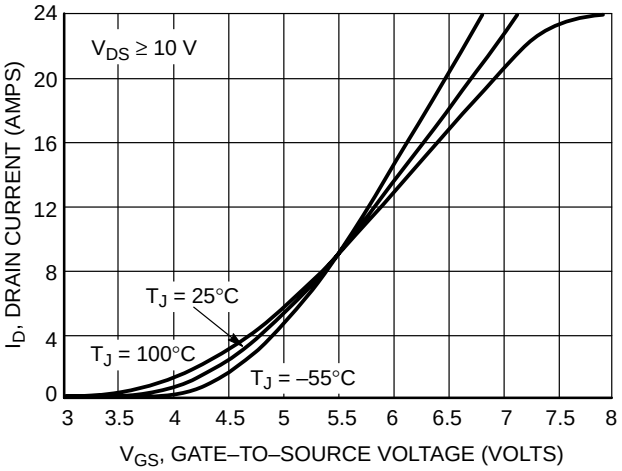


**Figure 2. Transfer Characteristics**

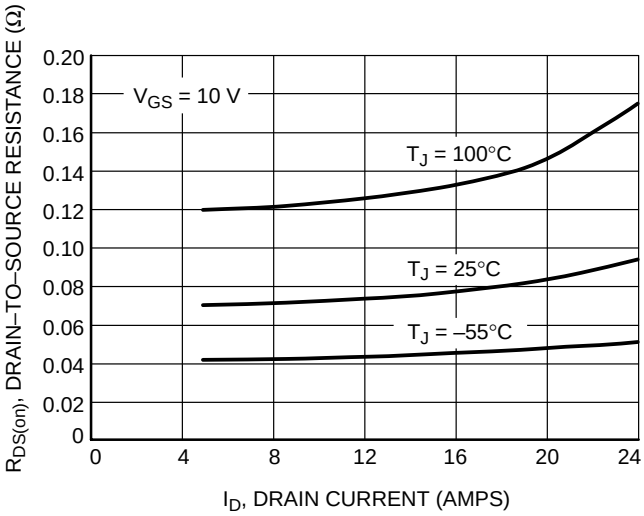


**Figure 3. On–Resistance versus Gate–to–Source Voltage**

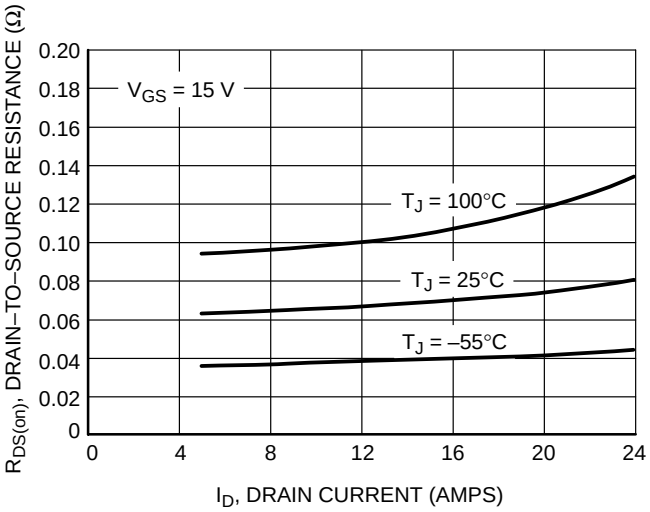


**Figure 4. On–Resistance versus Drain Current and Gate Voltage**

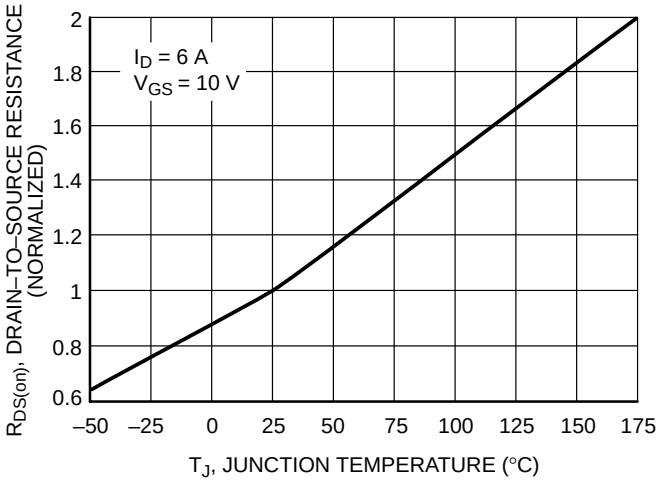


**Figure 5. On–Resistance Variation with Temperature**

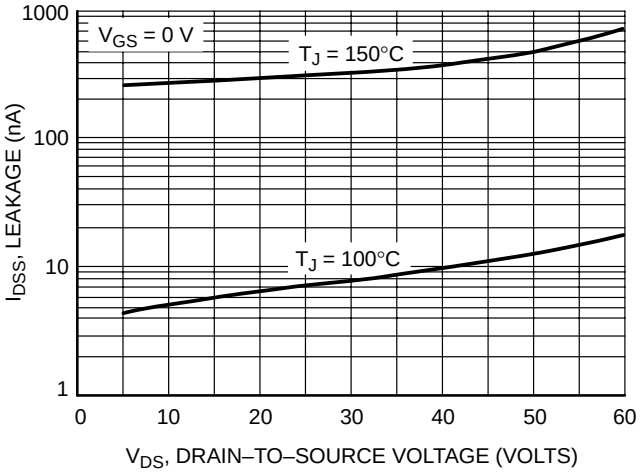


**Figure 6. Drain–to–Source Leakage Current versus Voltage**

## POWER MOSFET SWITCHING

Switching behavior is most easily modeled and predicted by recognizing that the power MOSFET is charge controlled. The lengths of various switching intervals (Δt) are determined by how fast the FET input capacitance can be charged by current from the generator.

The published capacitance data is difficult to use for calculating rise and fall because drain–gate capacitance varies greatly with applied voltage. Accordingly, gate charge data is used. In most cases, a satisfactory estimate of average input current ($I_{G(AV)}$) can be made from a rudimentary analysis of the drive circuit so that

$t = Q/I_{G(AV)}$

During the rise and fall time interval when switching a resistive load, $V_{GS}$ remains virtually constant at a level known as the plateau voltage, $V_{SGP}$. Therefore, rise and fall times may be approximated by the following:

$t_r = Q_2 \times R_G/(V_{GG} - V_{GSP})$
$t_f = Q_2 \times R_G/V_{GSP}$

where

$V_{GG}$ = the gate drive voltage, which varies from zero to $V_{GG}$
$R_G$ = the gate drive resistance
and $Q_2$ and $V_{GSP}$ are read from the gate charge curve.

During the turn–on and turn–off delay times, gate current is not constant. The simplest calculation uses appropriate values from the capacitance curves in a standard equation for voltage change in an RC network. The equations are:

$t_{d(on)} = R_G\, C_{iss}\, \text{In}\, [V_{GG}/(V_{GG} - V_{GSP})]$
$t_{d(off)} = R_G\, C_{iss}\, \text{In}\, (V_{GG}/V_{GSP})$

The capacitance ($C_{iss}$) is read from the capacitance curve at a voltage corresponding to the off–state condition when calculating $t_{d(on)}$ and is read at a voltage corresponding to the on–state when calculating $t_{d(off)}$.

At high switching speeds, parasitic circuit elements complicate the analysis. The inductance of the MOSFET source lead, inside the package and in the circuit wiring which is common to both the drain and gate current paths, produces a voltage at the source which reduces the gate drive current. The voltage is determined by Ldi/dt, but since di/dt is a function of drain current, the mathematical solution is complex. The MOSFET output capacitance also complicates the mathematics. And finally, MOSFETs have finite internal gate resistance which effectively adds to the resistance of the driving source, but the internal resistance is difficult to measure and, consequently, is not specified.

The resistive switching time variation versus gate resistance (Figure 9) shows how typical switching performance is affected by the parasitic circuit elements. If the parasitics were not present, the slope of the curves would maintain a value of unity regardless of the switching speed. The circuit used to obtain the data is constructed to minimize common inductance in the drain and gate circuit loops and is believed readily achievable with board mounted components. Most power electronic loads are inductive; the data in the figure is taken with a resistive load, which approximates an optimally snubbed inductive load. Power MOSFETs may be safely operated into an inductive load; however, snubbing reduces switching losses.

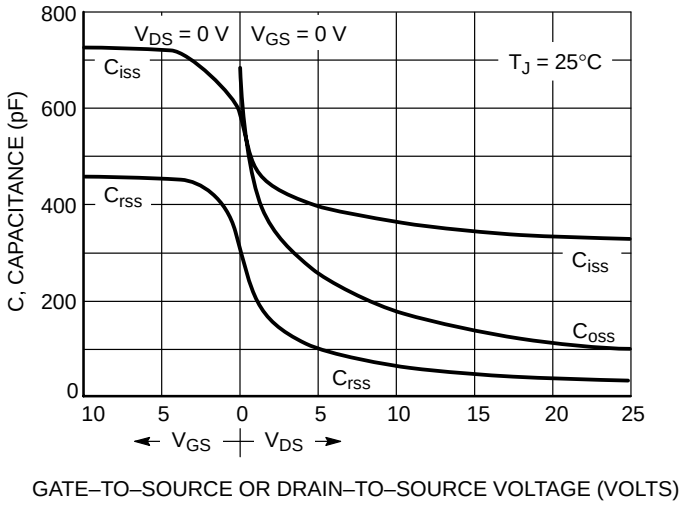


**Figure 7. Capacitance Variation**

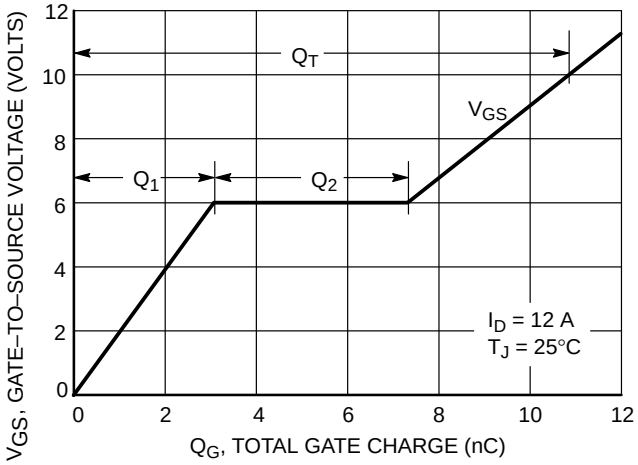


**Figure 8. Gate–To–Source and Drain–To–Source Voltage versus Total Charge**

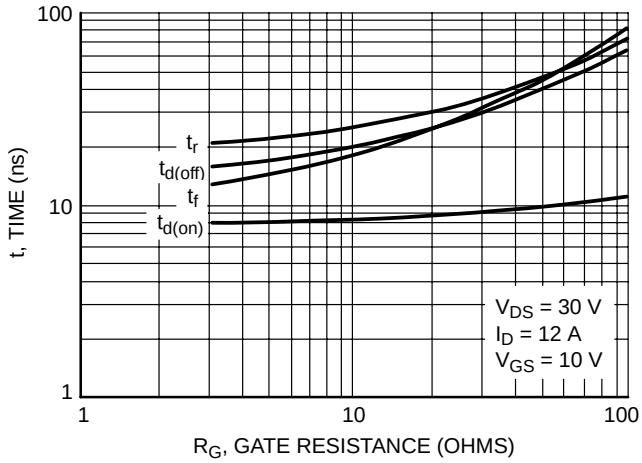


**Figure 9. Resistive Switching Time Variation versus Gate Resistance**

## DRAIN–TO–SOURCE DIODE CHARACTERISTICS

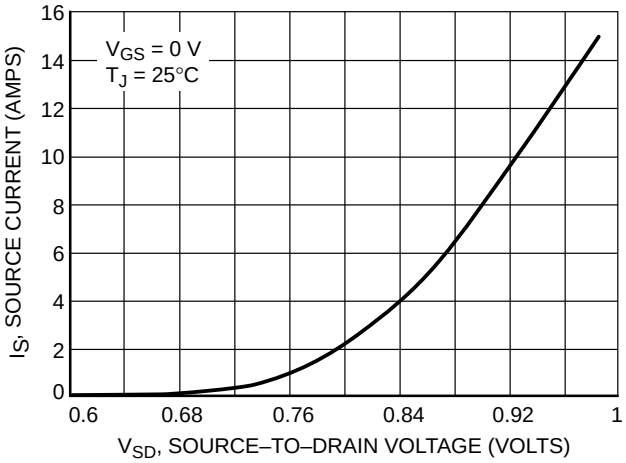


**Figure 10. Diode Forward Voltage versus Current**

## SAFE OPERATING AREA

The Forward Biased Safe Operating Area curves define the maximum simultaneous drain–to–source voltage and drain current that a transistor can handle safely when it is forward biased. Curves are based upon maximum peak junction temperature and a case temperature ($T_C$) of 25°C. Peak repetitive pulsed power limits are determined by using the thermal response data in conjunction with the procedures discussed in AN569, “Transient Thermal Resistance – General Data and Its Use.”

Switching between the off–state and the on–state may traverse any load line provided neither rated peak current ($I_{DM}$) nor rated voltage ($V_{DSS}$) is exceeded and the transition time ($t_r$,$t_f$) do not exceed 10 µs. In addition the total power averaged over a complete switching cycle must not exceed $(T_{J(MAX)} – T_C)/(R_{\theta JC})$.

A Power MOSFET designated E–FET can be safely used in switching circuits with unclamped inductive loads. For reliable operation, the stored energy from circuit inductance dissipated in the transistor while in avalanche must be less than the rated limit and adjusted for operating conditions differing from those specified. Although industry practice is to rate in terms of energy, avalanche energy capability is not a constant. The energy rating decreases non–linearly with an increase of peak current in avalanche and peak junction temperature.

Although many E–FETs can withstand the stress of drain–to–source avalanche at currents up to rated pulsed current ($I_{DM}$), the energy rating is specified at rated continuous current ($I_D$), in accordance with industry custom. The energy rating must be derated for temperature as shown in the accompanying graph (Figure 12). Maximum energy at currents below rated continuous $I_D$ can safely be assumed to equal the values indicated.

## SAFE OPERATING AREA

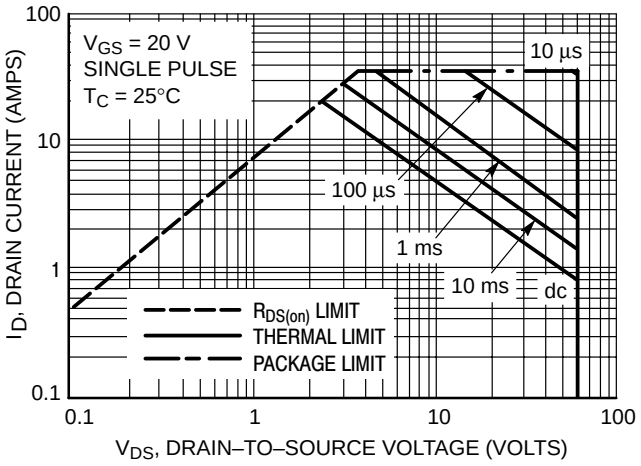


**Figure 11. Maximum Rated Forward Biased Safe Operating Area**

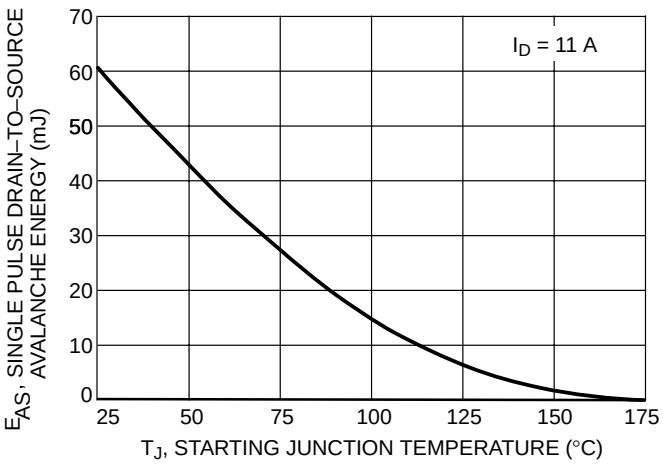


**Figure 12. Maximum Avalanche Energy versus Starting Junction Temperature**

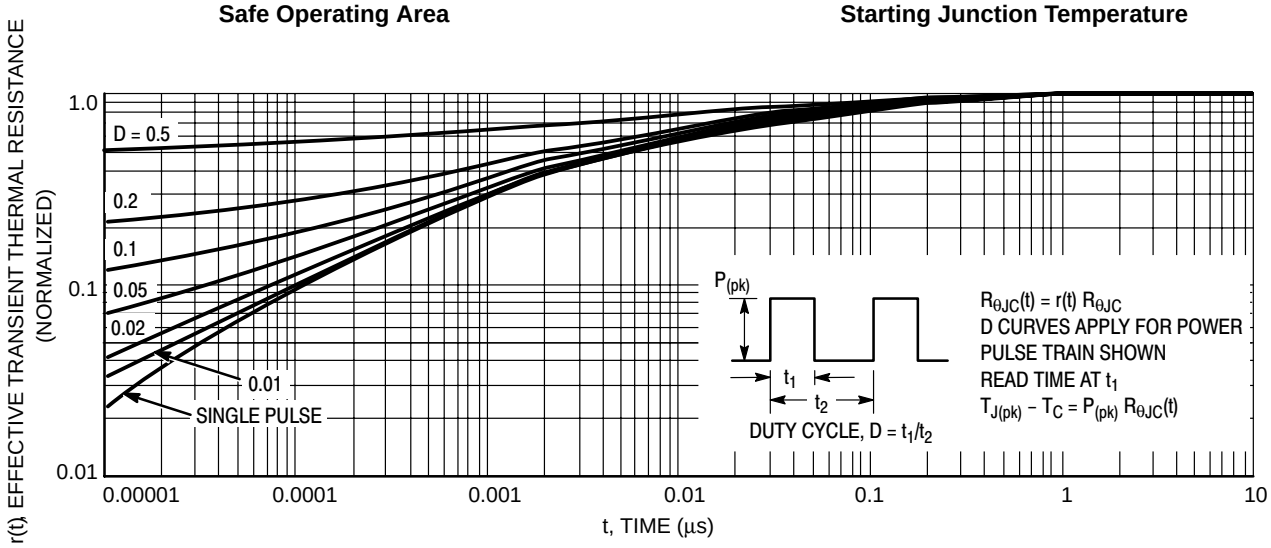


**Figure 13. Thermal Response**

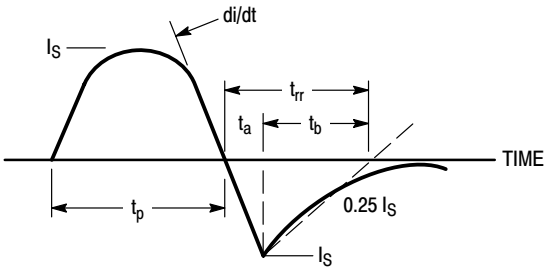


**Figure 14. Diode Reverse Recovery Waveform**

## PACKAGE DIMENSIONS

**DPAK**
CASE 369A–13
ISSUE AA

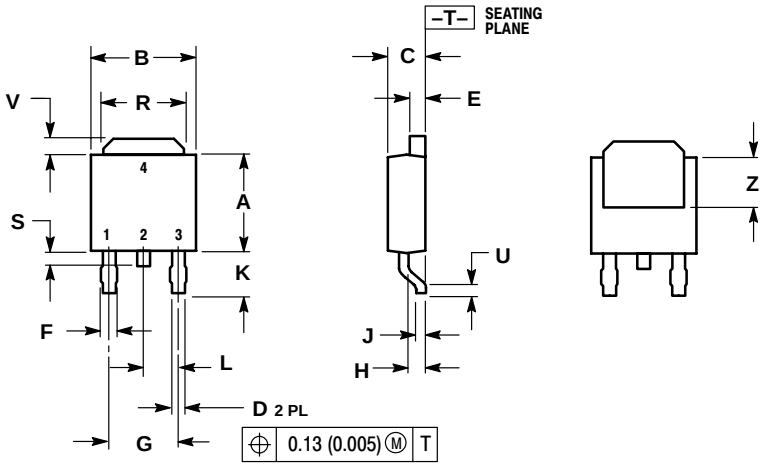


NOTES:
1. DIMENSIONING AND TOLERANCING PER ANSI Y14.5M, 1982.
2. CONTROLLING DIMENSION: INCH.

| DIM | INCHES MIN | INCHES MAX | MILLIMETERS MIN | MILLIMETERS MAX |
|---|---|---|---|---|
| A | 0.235 | 0.250 | 5.97 | 6.35 |
| B | 0.250 | 0.265 | 6.35 | 6.73 |
| C | 0.086 | 0.094 | 2.19 | 2.38 |
| D | 0.027 | 0.035 | 0.69 | 0.88 |
| E | 0.033 | 0.040 | 0.84 | 1.01 |
| F | 0.037 | 0.047 | 0.94 | 1.19 |
| G | 0.180 BSC | | 4.58 BSC | |
| H | 0.034 | 0.040 | 0.87 | 1.01 |
| J | 0.018 | 0.023 | 0.46 | 0.58 |
| K | 0.102 | 0.114 | 2.60 | 2.89 |
| L | 0.090 BSC | | 2.29 BSC | |
| R | 0.175 | 0.215 | 4.45 | 5.46 |
| S | 0.020 | 0.050 | 0.51 | 1.27 |
| U | 0.020 | --- | 0.51 | --- |
| V | 0.030 | 0.050 | 0.77 | 1.27 |
| Z | 0.138 | --- | 3.51 | --- |

STYLE 2:
PIN 1. GATE
2. DRAIN
3. SOURCE
4. DRAIN

**DPAK**
CASE 369–07
ISSUE M

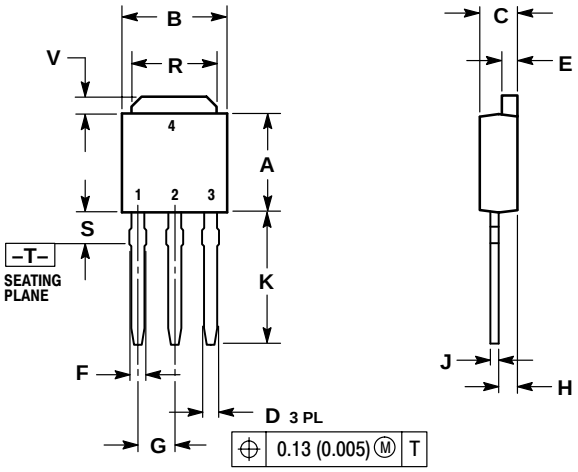


NOTES:
1. DIMENSIONING AND TOLERANCING PER ANSI Y14.5M, 1982.
2. CONTROLLING DIMENSION: INCH.

| DIM | INCHES MIN | INCHES MAX | MILLIMETERS MIN | MILLIMETERS MAX |
|---|---|---|---|---|
| A | 0.235 | 0.250 | 5.97 | 6.35 |
| B | 0.250 | 0.265 | 6.35 | 6.73 |
| C | 0.086 | 0.094 | 2.19 | 2.38 |
| D | 0.027 | 0.035 | 0.69 | 0.88 |
| E | 0.033 | 0.040 | 0.84 | 1.01 |
| F | 0.037 | 0.047 | 0.94 | 1.19 |
| G | 0.090 BSC | | 2.29 BSC | |
| H | 0.034 | 0.040 | 0.87 | 1.01 |
| J | 0.018 | 0.023 | 0.46 | 0.58 |
| K | 0.350 | 0.380 | 8.89 | 9.65 |
| R | 0.175 | 0.215 | 4.45 | 5.46 |
| S | 0.050 | 0.090 | 1.27 | 2.28 |
| V | 0.030 | 0.050 | 0.77 | 1.27 |

STYLE 2:
PIN 1. GATE
2. DRAIN
3. SOURCE
4. DRAIN

## PUBLICATION ORDERING INFORMATION

**Literature Fulfillment**:
Literature Distribution Center for ON Semiconductor
P.O. Box 5163, Denver, Colorado 80217 USA
**Phone**: 303–675–2175 or 800–344–3860 Toll Free USA/Canada
**Fax**: 303–675–2176 or 800–344–3867 Toll Free USA/Canada
**Email**: ONlit@hibbertco.com

**N. American Technical Support**: 800–282–9855 Toll Free USA/Canada

**JAPAN**: ON Semiconductor, Japan Customer Focus Center
4–32–1 Nishi–Gotanda, Shinagawa–ku, Tokyo, Japan 141–0031
**Phone**: 81–3–5740–2700
**Email**: r14525@onsemi.com

**ON Semiconductor Website**: http://onsemi.com

For additional information, please contact your local
Sales Representative.