SSM SOLID STATE MICROWAVE

THOMSON-CSF COMPONENTS CORPORATION
Montgomeryville, PA 18936 ■ (215) 362-8500 ■ TWX 510-661-7299

SD1410-3

800 MHz COMMUNICATIONS TRANSISTOR

DESCRIPTION

The SD1410-3 is an NPN Silicon Epitaxial Planar Transistor that is designed for amplifier/multiplier applications in the 806-866 MHz mobile range. This transistor is wired common base for optimum gain and efficiency over the frequency range.

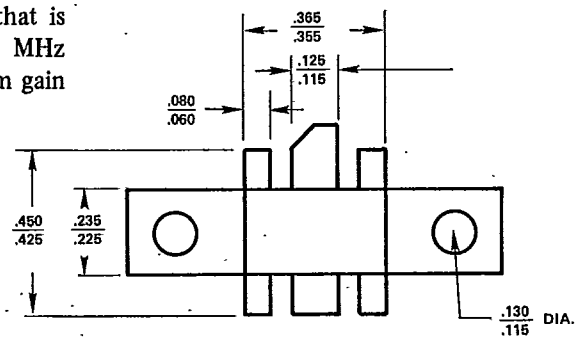

FEATURES

- Greater than 8.0 dB gain at 6.0 W output @ 836 MHz
- Common base configuration
- High power gain and stability over the frequency range
- Input matched for flat response
- Infinite VSWR at rated conditions

ABSOLUTE MAX. RATING

V_{CBO}	:	Collector-Base Voltage	36.0 V
V_{CEO}	:	Collector-Emitter Voltage	16.0 V
V_{EBO}	:	Emitter-Base Voltage	4.0 V
I_c	:	Collector Current (max.)	5.0 A
PT.	:	Total Device Dissipation @ 25°C	28.0 W
ϕ_{jc}	:	Thermal Resistance	6.8° C/W
T_j	:	Junction Temperature	200° C
T_s	:	Storage Temperature	–65°C to +200°C

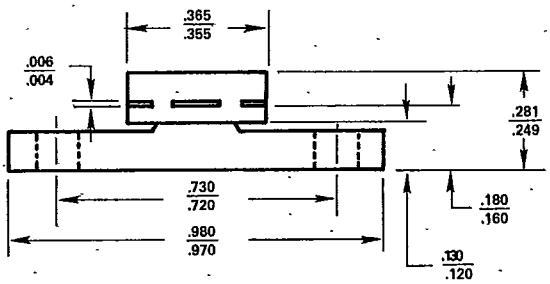

.230 6LFL

ELECTRICAL CHARACTERISTICS

Characteristics	Symbol	Test Conditions	Min.	Typ.	Max.	Unit
Collector-Emitter Breakdown Voltage*	BV_{CEO}	I_c = 50 mA, I_b = 0	16.0	–	–	Vdc
Collector-Emitter Breakdown Voltage*	BV_{CES}	I_c = 50 mA, V_{be} = 0	36.0	–	–	Vdc
Emitter-Base Breakdown Voltage	BV_{EBO}	I_e = 10 mA, I_c = 0	4.0	–	–	Vdc
Collector Cut Off Current	I_{CES}	V_{ce} = 15 V, V_{be} = 0	–	–	10.0	mA
DC Current Gain	h_{FE}	V_{ce} = 6 V, I_c = 1 A	20.0	–	–	–

*Pulsed through 25 MH Inductor

RF CHARACTERISTICS: SMALL SIGNAL

Output Capacitance – Fo - 1.0 MHz	C_{ob}	V_{cb} = 12.5 V, I_c = 0	–	16.0	–	pF

RF CHARACTERISTICS: LARGE SIGNAL

Power Output	P_o	fo - 836 MHz, V_{ce} = 12.5 V	6.0	–	–	W
Power Gain	P_g	fo - 836 MHz, V_{ce} = 12.5 V	8.0	–	–	dB
Input Impedance @ 6.0 Watts	Z_s	fo - 836 MHz, V_{ce} = 12.5 V	(2.8 – J 9.7)	(Typ.)	–	ohms
Output Impedance @ 6.0 Watts	Z_{cl}	fo - 836 MHz, V_{ce} = 12.5 V	(2.1 – J 1.3)	(Typ.)	–	ohms

SD- - - 14103-X

THOMSON-CSF