SOLID STATE MICROWAVE

THOMSON-CSF COMPONENTS CORPORATION
Montgomeryville, PA 18936 ■ (215) 362-8500 ■ TWX 510-661-7299

SD1418

800 MHz COMMUNICATIONS TRANSISTOR

DESCRIPTION

The SD1418 is a 12.5 volt epitaxial silicon NPN planar transistor designed primarily for 800 MHz mobile communications. This device utilizes matched input technology (Tuned Q) to increase bandwidth and power gain over the complete range of 806-866 MHz.

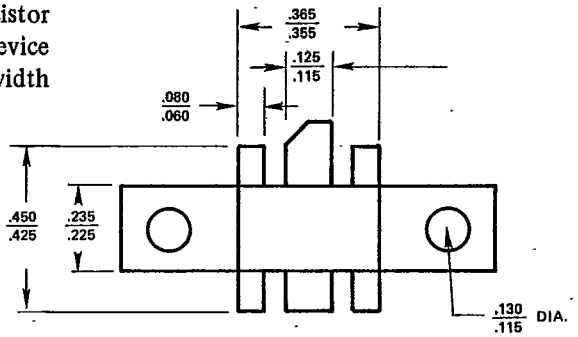

FEATURES

- Designed for 806-866 MHz mobile equipment
- 15 watts (min.) with greater than 5.2 dB gain @ 836 MHz
- Withstands infinite VSWR at rated operating conditons
- Matched Input Technology
- Common Emitter Configuration

ABSOLUTE MAX. RATING

V_{CBO}	:	Collector-Base Voltage	36.0 V
V_{CEO}	:	Collector-Emitter Voltage	16.0 V
V_{EBO}	:	Emitter-Base Voltage	4.0 V
I_c	:	Collector Current (max.)	7.0 A
PT.	:	Total Device Dissipation @ 25°C	46.0 W
ϕ_{jc}	:	Thermal Resistance	3.8°C/W
T_j	:	Junction Temperature	+200°C
T_s	:	Storage Temperature	−65°C to +200°C

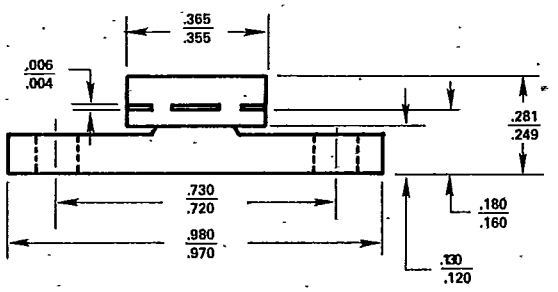

.230 6LFL

ELECTRICAL CHARACTERISTICS

Characteristics	Symbol	Test Conditions	Min.	Typ.	Max.	Unit
Collector-Emitter Breakdown Voltage*	BV_{CEO}	I_c = 50 mA, I_b = 0	16.0	–	–	Vdc
Collector-Emitter Breakdown Voltage*	BV_{CES}	I_c = 50 mA, V_{be} = 0	36.0	–	–	Vdc
Emitter-Base Breakdown Voltage	BV_{EBO}	I_e = 10 mA, I_c = 0	4.0	–	–	Vdc
Collector Cut Off Current	I_{CES}	V_{cb} = 15 V, V_{be} = 0	–	–	10.0	mA
DC Current Gain	h_{FE}	V_{ce} = 6 V, I_c = 1 A	20.0	–	–	–

*Pulsed through 25 MH Inductor

RF CHARACTERISTICS: SMALL SIGNAL

Output Capacitance	C_{ob}	V_{cb} = 12.5 V, I_e = 0	–	20.0	–	pF

RF CHARACTERISTICS: LARGE SIGNAL

Amplifier Power Out	P_o	fo = 836 MHz, V_{ce} = 12.5 V	15.0	–	–	Watts
Amplifier Power Gain	P_g	fo = 836 MHz, V_{ce} = 12.5 V	5.2	–	–	dB
Impedance-Input @ 15 Watts	Z_{in}	fo = 836 MHz, V_{ce} = 12.5 V	(3.0 – J 4.8)	(Typ.)	–	ohms
Impedance-Output @ 15 Watts	Z_{out}	fo = 836 MHz, V_{ce} = 12.5 V	(1.6 – J 2.5)	(Typ.)	–	ohms

SD--01418-1X

SD1418

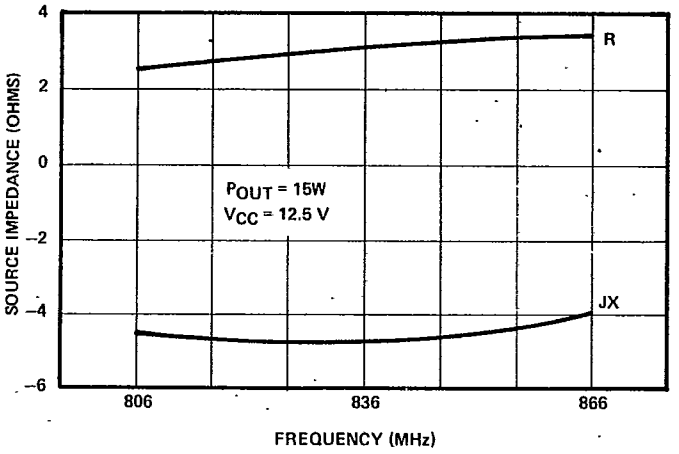

SERIES SOURCE IMPEDANCE VS. FREQUENCY

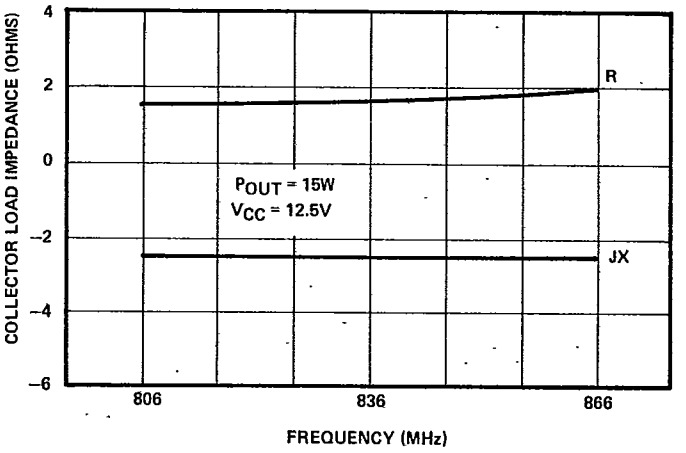

SERIES COLLECTOR LOAD IMPEDANCE VS. FREQUENCY

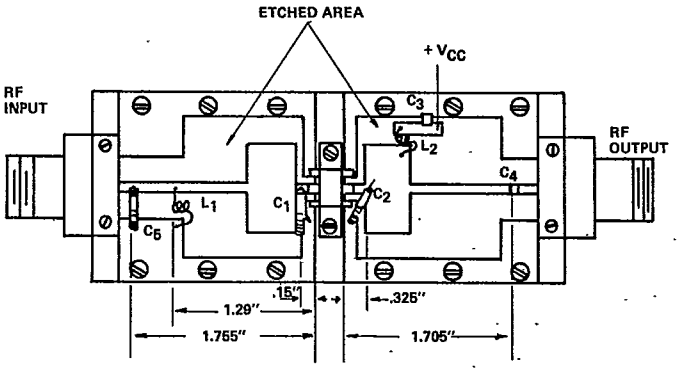

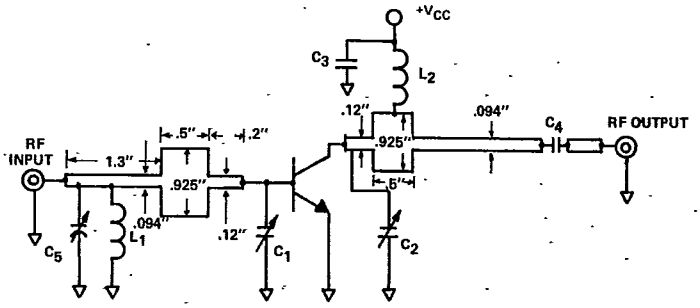

COMPONENTS LIST

C1, C2, C5	.5 – 5.0 PF	Johanson E5851
L1, L2	4.5 TURNS #22, .09" I.D.	
C3	470 PF, 100 MIL SQ	ATC
C4	.001 MF 50 MIL SQ	ATC 200 A 102 MC 50
BOARD MATERIAL – TEFLON GLASS 1/32" E, ≈ 2.45		

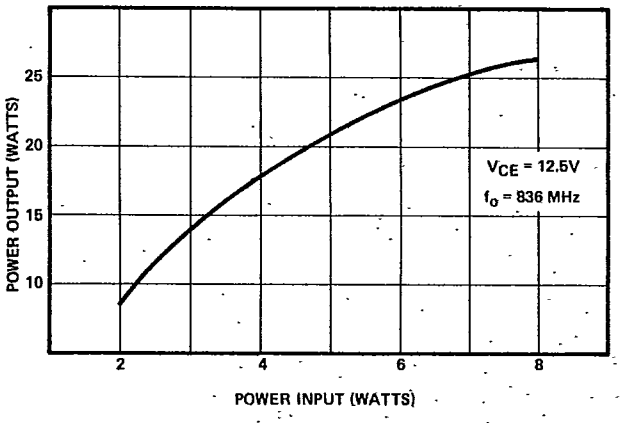

POWER OUTPUT VS. POWER INPUT

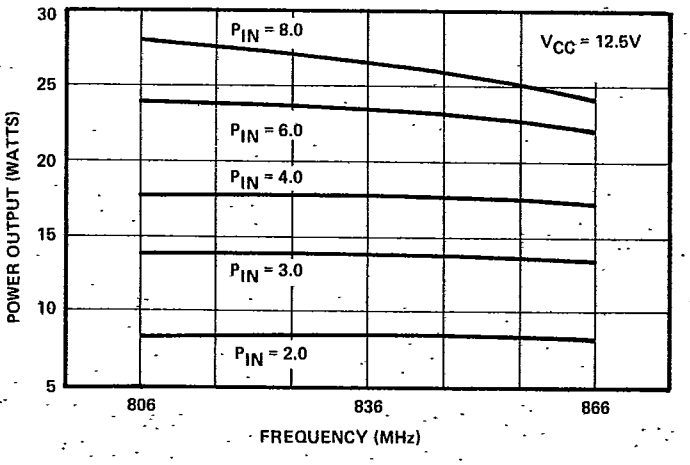

POWER OUTPUT VS. FREQUENCY

SD---01418-2X