SOLID STATE MICROWAVE

THOMSON-CSF COMPONENTS CORPORATION
Montgomeryville, PA 18936 ■ (215) 362-8500 ■ TWX 510-661-7299

SD1421

800 MHz COMMUNICATIONS TRANSISTOR

DESCRIPTION

The SD1421 is an NPN Silicon Epitaxial Planar Transistor that was designed for amplifier applications in the 806-866 MHz frequency range. Internal input matching and Common Base Configuration assure optimum gain and efficiency across the entire frequency band.

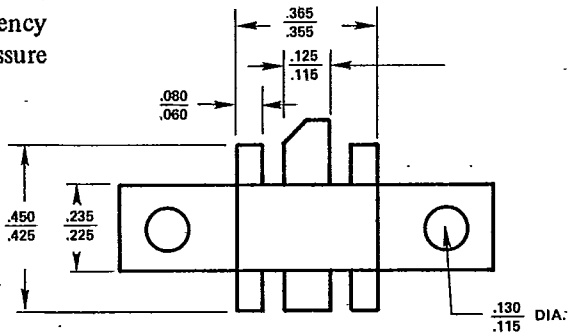

FEATURES

- Designed for 800 MHz Mobile Communications Equipment.
- 25 Watts (min.) with greater than 5.5 dB gain.
- Withstands infinite VSWR at rated power output.
- Common Base Configuration.
- Internal input matching, "Tuned Q".

ABSOLUTE MAX. RATING

V_{CBO}	:	Collector-Base Voltage	36.0 V
V_{CEO}	:	Collector-Emitter Voltage	18.0 V
V_{EBO}	:	Emitter-Base Voltage	4.0 V
I_c	:	Collector Current (max.)	7.5 A
Pt	:	Total Device Dissipation @ 25°C	70.0 W
ϕ_{jc}	:	Thermal Resistance	2.5° C/W
T_j	:	Junction Temperature	200°C
T_s	:	Storage Temperature	−65°C to +200°C

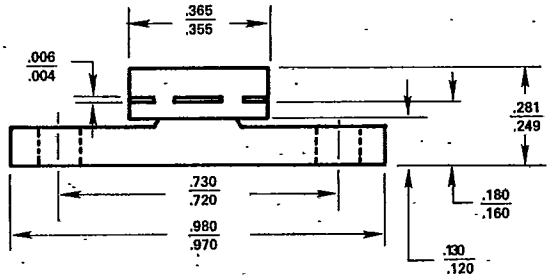

.230 6LFL

ELECTRICAL CHARACTERISTICS

Characteristics	Symbol	Test Conditions	Min.	Typ.	Max.	Unit
Collector-Emitter Breakdown Voltage*	BV_{CEO}	I_c = 50 mA, I_b = 0	18.0	–	–	V_{dc}
Collector-Emitter Breakdown Voltage*	BV_{CES}	I_c = 50 mA, V_{be} = 0	36.0	–	–	V_{dc}
Emitter-Base Breakdown Voltage	BV_{EBO}	I_e = 10 mA, I_c = 0	4.0	–	–	V_{dc}
Collector Cut Off Current	I_{CBO}	V_{cb} = 15 V, I_e = 0	–	–	5.0	mA
DC Current Gain	h_{FE}	V_{ce} = 5 V, I_c = 1.A	15.0	–	–	–

*Pulsed through 25 MH Inductor

RF CHARACTERISTICS: SMALL SIGNAL

Output Capacitance – Fo = 1.0 MHz	C_{ob}	V_{cb} = 12.5 V, I_c = 0	–	–	75.0	pF

RF CHARACTERISTICS: LARGE SIGNAL

Amplifier Power Out	P_o	836 MHz/12.5 V	25.0	–	–	Watts
Amplifier Power Gain	P_g	836 MHz/12.5 V	5.5	–	–	dB
Impedance–Input @ 6.5 Watts = P_{IN}	Z_s	836 MHz/12.5 V	3.6 – J 4.0	(Typ.)	–	ohms
Impedance–Output	Z_{cl}	836 MHz/12.5 V	2.0 – J 0.4	(Typ.)	–	ohms
VSWR Capability		fo = 836 MHz, V_{cc} = 12.5 V, P_{OUT} = 25 W	Infinite			

SD--- 01421-1X

SD1421

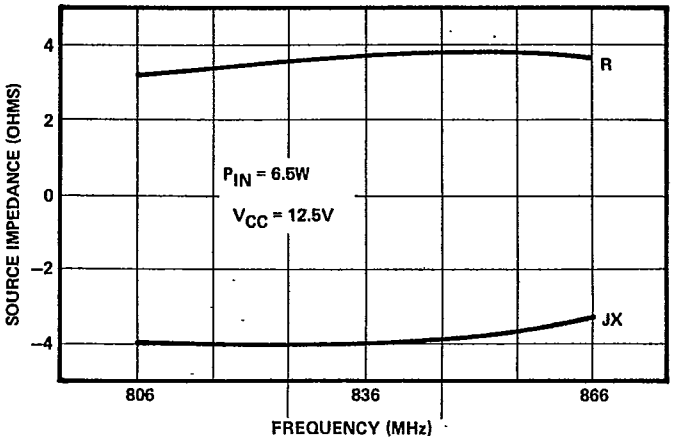

SERIES SOURCE IMPEDANCE VS. FREQUENCY

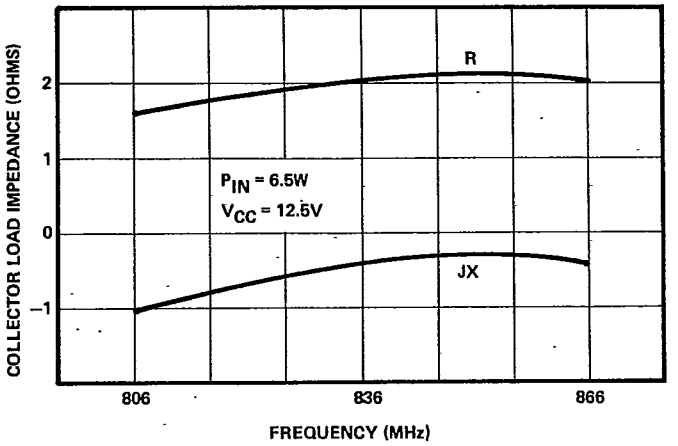

SERIES COLLECTOR LOAD IMPEDANCE VS. FREQUENCY

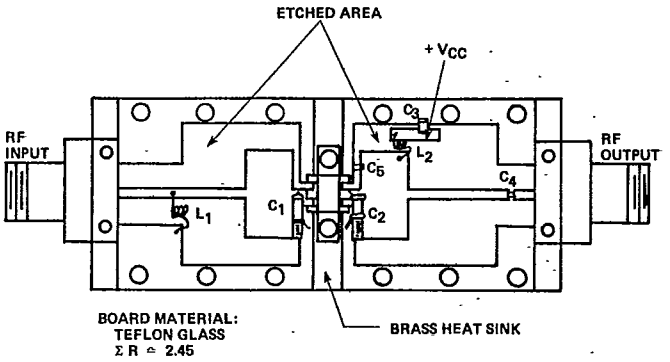

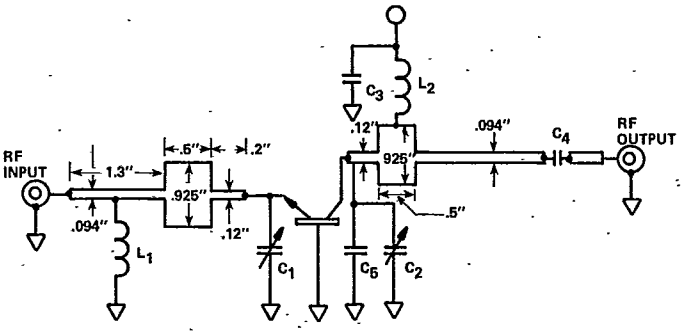

COMPONENTS LIST

C1, C2	.5 – 5.0 PF	Johanson E5851
L1, L2	4.5 TURNS #22, .09" I.D.	
C3	470 PF, 100 MIL SQ	ATC
C4	.001 MF 50 MIL SQ	ATC 200 A 102 MC 50
C5	3.2 PF 50 MIL SQ	ATC

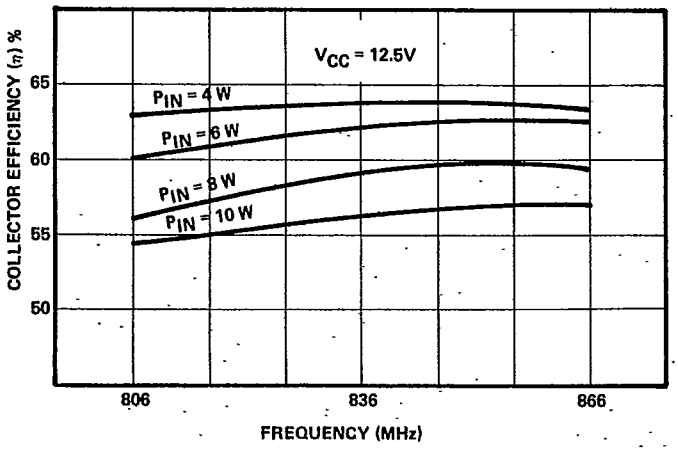

COLLECTOR EFFICIENCY (η) % VS. FREQUENCY

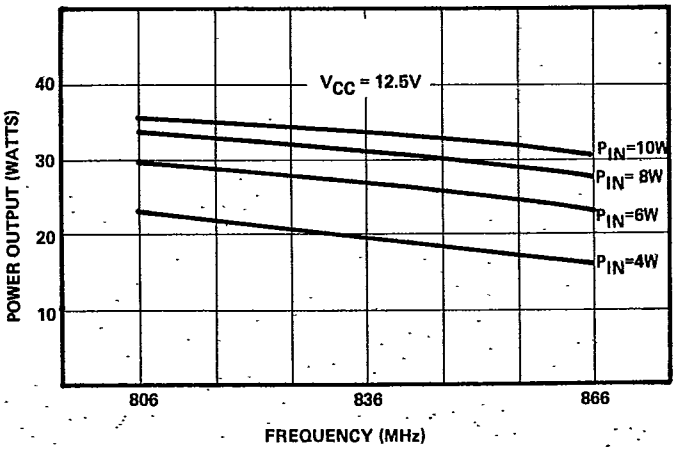

POWER OUTPUT VS. FREQUENCY