TPP25011
TPP25012

PROGRAMMABLE TRANSIENT VOLTAGE SUPPRESSOR AND CURRENT REGULATION

FEATURES

- UNIDIRECTIONAL FUNCTION
- PROGRAMMABLE BREAKDOWN VOLTAGE UP TO 250 V
- PROGRAMMABLE CURRENT LIMITATION FROM 40 mA TO 500 mA
- HIGH SURGE CURRENT CAPABILITY I_{PP} = 30A 10/1000 µs
- AVAILABLE IN DIL 8 AND SO 8 PACKAGES

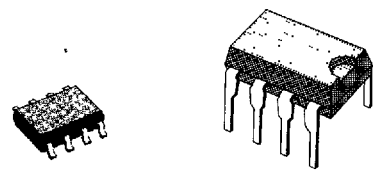

SO 8 (Plastic) **DIL 8** (Plastic)

DESCRIPTION

Dedicated to sensitive telecom equipment protection, this device can provide both voltage protection and current limitation with a very tight tolerance.
The breakdown voltage can be easily programmed by using an external zener diode.
A multiple protection mode can be also performed when using several zener diodes, providing to each line interface an optimized protection level.
The current limiting function is achieved with the use of a resistor between the gate and the cathode. The value of the resistor will determine the level of the desired current.

SCHEMATIC DIAGRAM

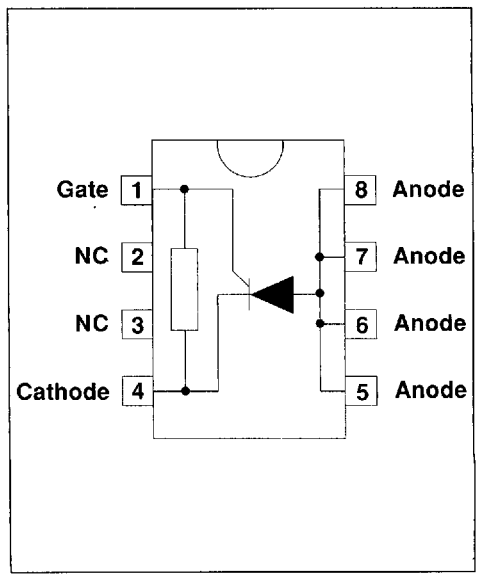

IN ACCORDANCE WITH FOLLOWING STANDARDS :

CCITT K17 - K20	10/700 µs	1.5 kV
	5/310 µs	38 A
VDE 0433	10/700 µs	2 kV
	5/200 µs	50 A
CNET	0.5/700 µs	1.5 kV
	0.2/310 µs	38 A

ABSOLUTE RATINGS (limiting values) (- 40°C ≤ T_{amb} ≤ +85°C)

Symbol	Parameter		Value	Unit
I_{PP}	Peak pulse current	10/1000 µs 5/320 µs 2/10 µs	30 40 75	A
I_{TSM}	Non repetitive surge peak on-state current	tp = 10 ms tp = 1 s	5 3.5	A
di/dt	Critical rate of rise of on-state current	Non repetitive	100	A/µs
dv/dt	Critical rate of rise of off-state voltage	67% V_{BR}	5	KV/µs
T_{stg} T_j	Storage and operating junction temperature range		- 40 to + 150 + 150	°C °C

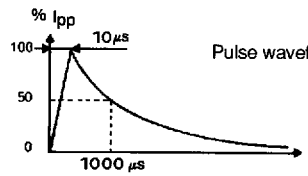

Pulse waveform 10/1000µs

THERMAL RESISTANCES

Symbol	Parameter		Value	Unit
R_{th} (j-a)	Junction-to-ambient	DIL 8 SO 8	125 171	°C/W °C/W

ELECTRICAL CHARACTERISTICS

Symbol	Parameter
V_{RM}	Stand-off voltage
V_{BR}	Breakdown voltage
V_{BO}	Breakover voltage
I_H	Holding current
V_T	On-state voltage @ I_T
I_{BO}	Breakover current
I_{PP}	Peak pulse current
V_G	Gate voltage
I_G	Firing gate current

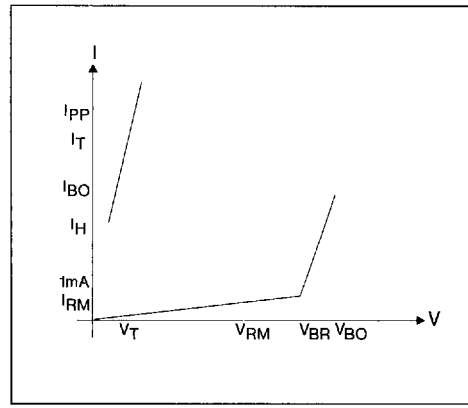

OPERATION WITHOUT GATE (0°C ≤ T_{amb} ≤ 70°C)

TYPE	I_{RM} @ V_{RM} max		V_{BR} @ I_R min		V_{BO} max	@ min note 1	I_{BO} max	I_H min note 1	V_T max note 2	C max note 3
	µA	V	V	mA	V	mA	mA	mA	V	pF
TPP250	6	60	250	1	340	15	200	180	5	100

OPERATION WITH GATE (T_{amb} = 25°C)

Types	V_{GN} @ I_{GN} =30 mA min	max	IG min	max
	note 4		V_A - C = 100 V	
	V	V	mA	mA
TPP250	1.05	1.35	5	40

Note 1 : See the reference test circuit for I_H, I_{BO} and V_{BO} parameters
Note 2 : Square pulse T_P= 500µs - I_T = 1A
Note 3 : V_R = 5 V, F = 1MHz.
Note 4 : V_{GN} limits are given at the typical I_{GN} value

REFERENCE TEST CIRCUIT FOR I_H, I_{BO} and V_{BO} parameters :

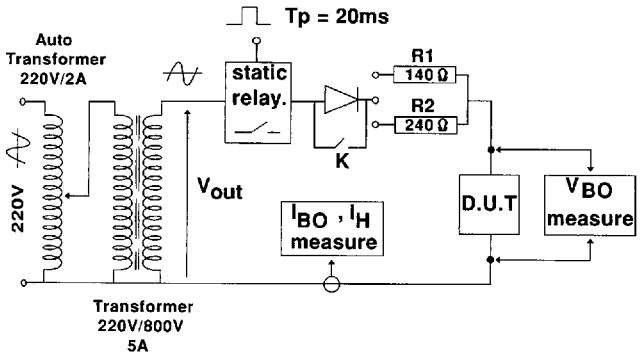

TEST PROCEDURE :

- Pulse Test duration (Tp = 20ms):
  - For Bidirectional devices = Switch K is closed
  - For Unidirectional devices = Switch K is open.
- V_{OUT} Selection
  - Device with $V_{BR} \leq 150$ Volt
    - $V_{OUT} = 250\ V_{RMS}$, $R_1 = 140\ \Omega$.
  - Device with $V_{BR} \geq 150$ Volt
    - $V_{OUT} = 480\ V_{RMS}$, $R_2 = 240\ \Omega$.

FUNCTIONAL HOLDING CURRENT (I_H) TEST CIRCUIT = GO - NOGO TEST.

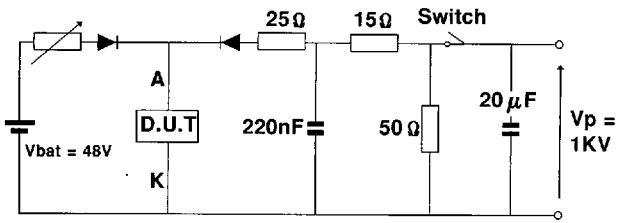

Surge Generator
10/700 µsec
Vp =1KV / Ipp = 25A

This is a GO-NOGO Test which allows to confirm the holding current (I_H) level in a functional test circuit. This test can be performed if the reference test circuit can't be implemented.

TEST PROCEDURE :

1) Adjust the current level at the I_H value by short circuiting the AK of the D.U.T.
2) Fire the D.U.T with a surge Current : Ipp = 25A , 10/700 µs.
3) The D.U.T will come back to the OFF-State within a duration of 50 ms max.

APPLICATION CIRCUIT

Overvoltage protection and current limitation

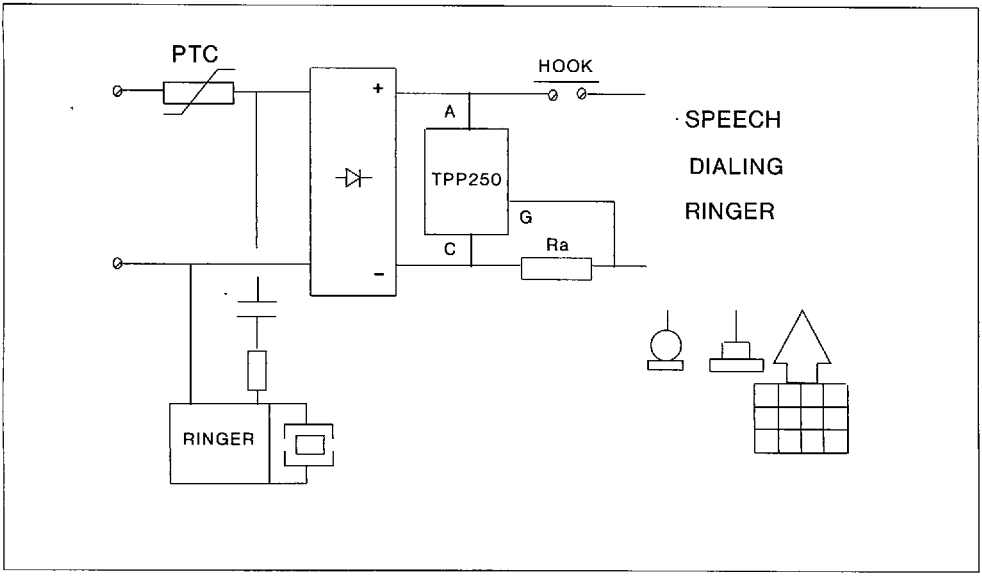

Table below gives the tolerance of the limited current I_T for each standardized resistor value.

CURRENT TOLERANCE		
R Ω (± 5%)	I_T mA min	I_T mA max
3.00	338	514
3.30	308	471
3.60	283	435
3.90	261	404
4.30	238	370
4.70	218	342
5.10	201	319
5.60	184	294
6.20	166	269
6.80	152	249
7.50	138	229
8.20	127	213
9.10	115	196
10.10	104	181
11.00	96	169
12.00	88	158
13.00	82	149
15.00	72	135
16.00	68	129
18.00	61	119
20.00	55	111
22.00	50	105
24.00	47	99
27.00	42	93
30.00	38	87

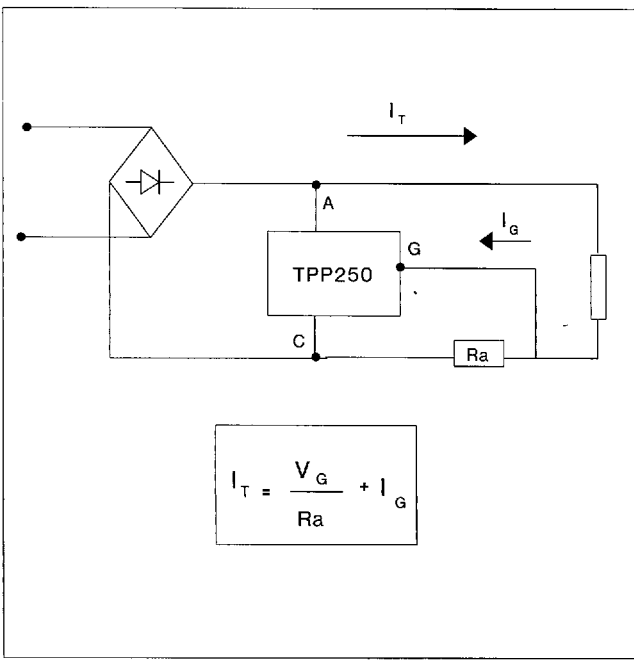

Ground key telephone set protection

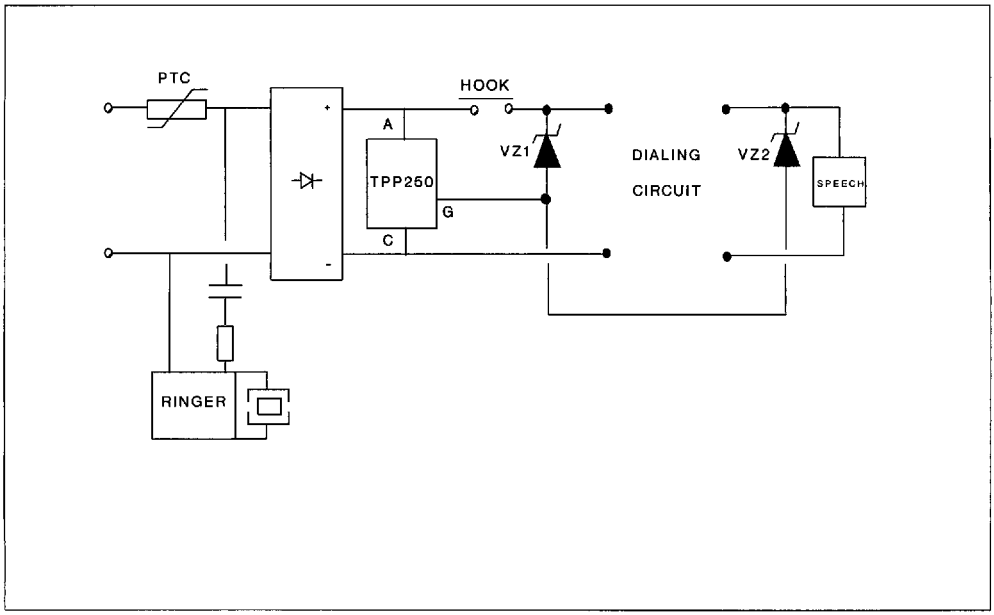

PROTECTION MODES :

OFF HOOK = Ringer circuit protection is insured with breakdown voltage at 250 V.

ON HOOK = In dialing mode and in conversation mode, the breakdown voltage of TPP250 can be adapted at different levels with two zener diodes.

ORDER CODE

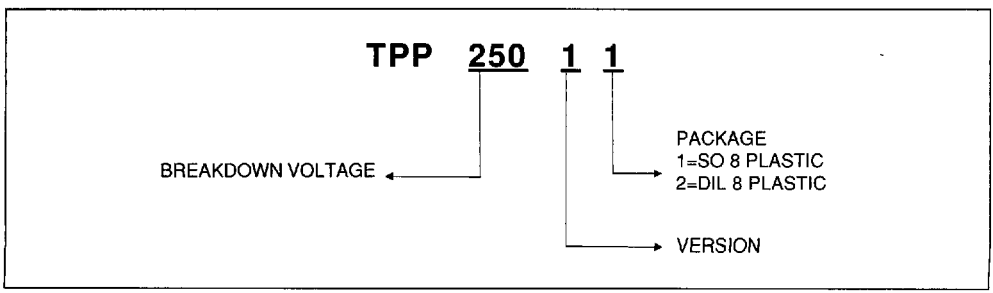

MARKING

Package	Type	Marking
SO 8 DIL 8	TPP25011 TPP25012	TPP250 TPP250

PACKAGE MECHANICAL DATA (in millimeters)

DIL 8 Plastic

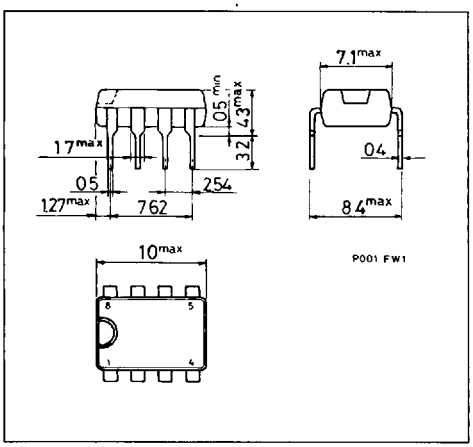

SO 8 Plastic

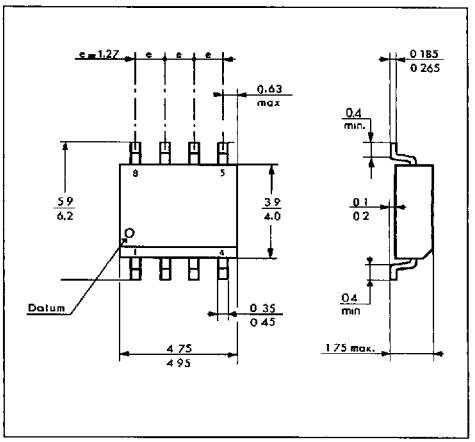

CONNECTION DIAGRAM

DIL 8 Plastic

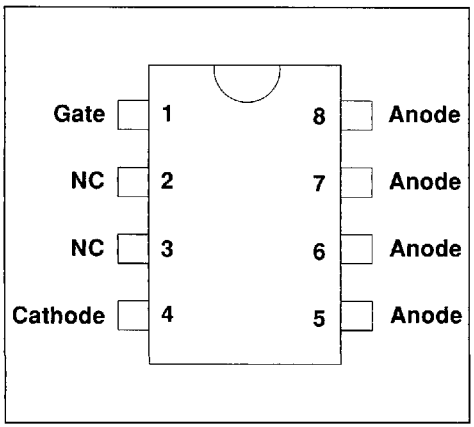

SO 8 Plastic

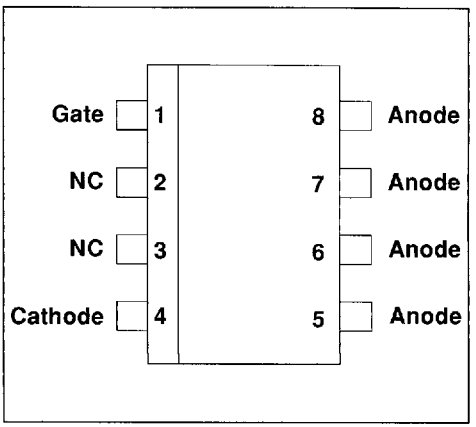

Packaging : Products supplied in antistatic tubes.