HIGH-SPEED 4K x 8 DUAL-PORT STATIC SRAM

IDT7134SA/LA

Features

- **High-speed access**
  - *Military: 25/35/45/55/70ns (max.)*
  - *Industrial: 55ns (max.)*
  - *Commercial: 20/25/35/45/55/70ns (max.)*
- **Low-power operation**
  - *IDT7134SA*
    Active: 700mW (typ.)
    Standby: 5mW (typ.)
  - *IDT7134LA*
    Active: 700mW (typ.)
    Standby: 1mW (typ.)
- **Fully asynchronous operation from either port**
- **Battery backup operation—2V data retention**
- **TTL-compatible; single 5V (±10%) power supply**
- **Available in 48-pin DIP, LCC, Flatpack and 52-pin PLCC**
- **Military product compliant to MIL-PRF-38535 QML**
- **Industrial temperature range (–40°C to +85°C) is available for selected speeds**

Description

The IDT7134 is a high-speed 4K x 8 Dual-Port Static RAM designed to be used in systems where on-chip hardware port arbitration is not needed. This part lends itself to those systems which cannot tolerate wait states or are designed to be able to externally arbitrate or withstand contention when both sides simultaneously access the same Dual-Port RAM location.

The IDT7134 provides two independent ports with separate control, address, and I/O pins that permit independent, asynchronous access for reads or writes to any location in memory. It is the user's responsibility to ensure data integrity when simultaneously accessing the same memory location from both ports. An automatic power down feature, controlled by $\overline{CE}$, permits the on-chip circuitry of each port to enter a very low standby power mode.

Fabricated using IDT's CMOS high-performance technology, these Dual-Port typically operate on only 700mW of power. Low-power (LA) versions offer battery backup data retention capability, with each port typically consuming 200µW from a 2V battery.

The IDT7134 is packaged on either a sidebraze or plastic 48-pin DIP, 48-pin LCC, 52-pin PLCC and 48-pin Flatpack. Military grade product is manufactured in compliance with the latest revision of MIL-PRF-38535 QML, making it ideally suited to military temperature applications demanding the highest level of performance and reliability.

Functional Block Diagram

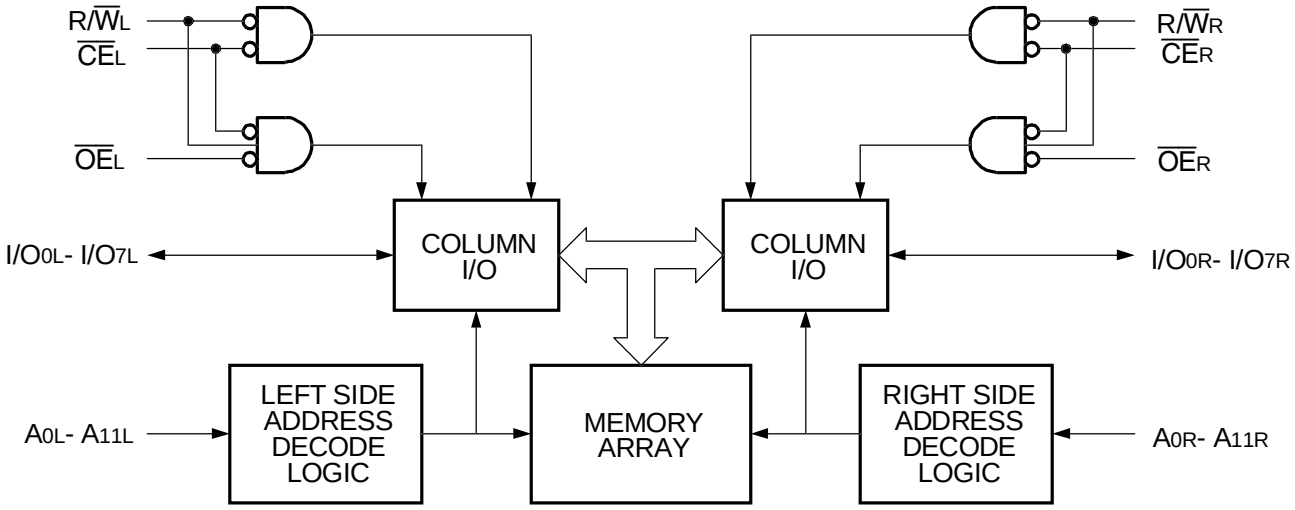

2720 drw 01

JUNE 1999

DSC-2720/9

Pin Configurations[1,2,3]

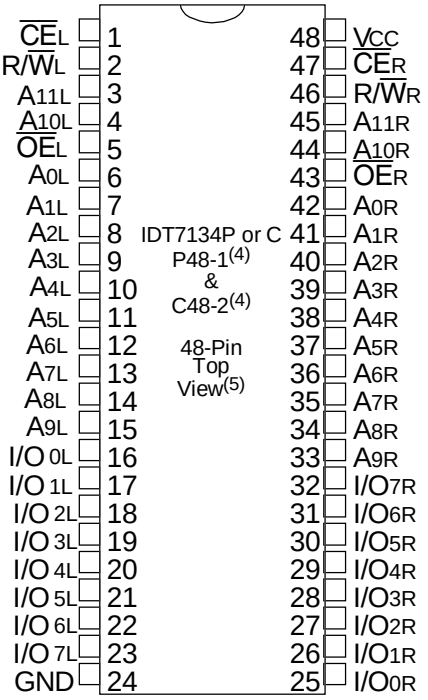

2720 drw 02

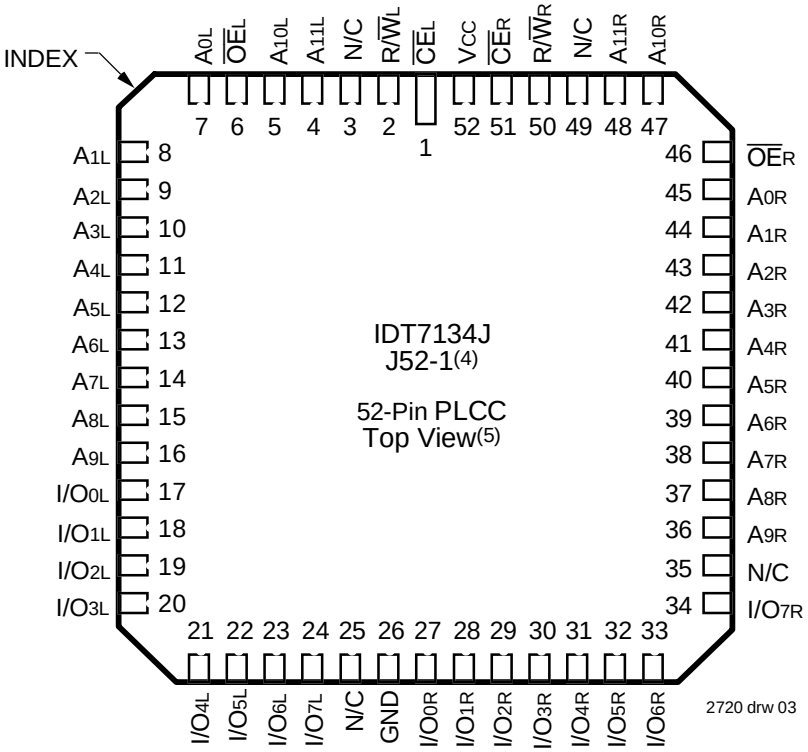

2720 drw 03

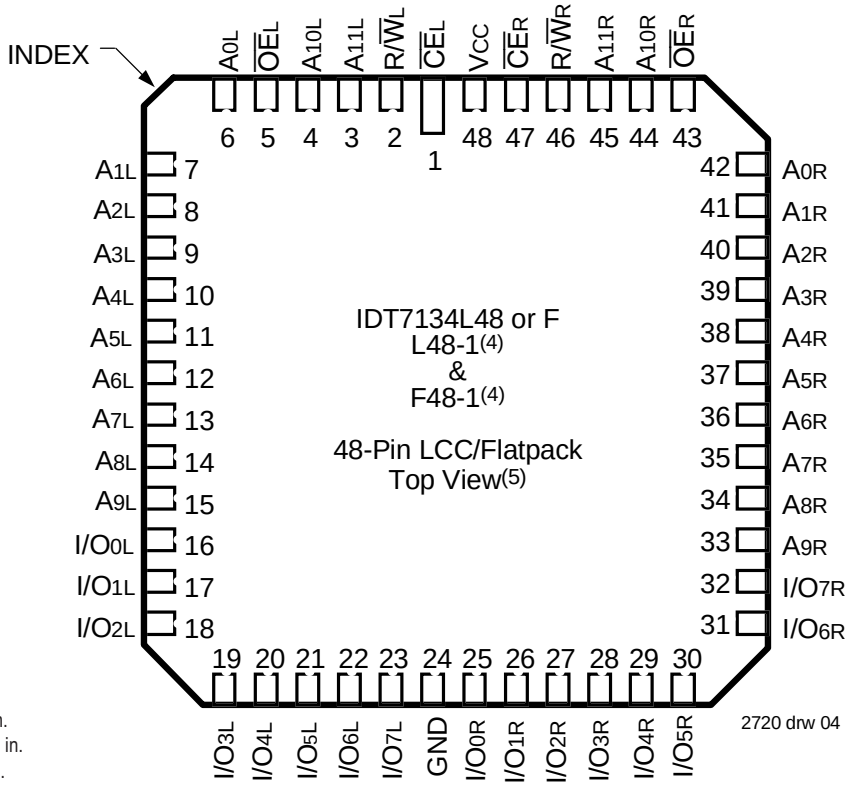

2720 drw 04

NOTES:

1. All Vcc pins must be connected to the power supply.
2. All GND pins must be connected to the ground supply.
3. P48-1 package body is approximately .55 in x .61 in x .19 in.
   C48-2 package body is approximately .62 in x 2.43 in x .15 in.
   J52-1 package body is approximately .75 in x .75 in x .17 in.
   L48-1 package body is approximately .57 in x .57 in x .68 in.
   F48-1 package body is approxiamtely .75 in x .75 in x .11 in.
4. This package code is used to reference the package diagram.
5. This text does not indicate orientation of actual part-marking.

Absolute Maximum Ratings(1)

Symbol	Rating	Commercial & Industrial	Military	Unit
V_{TERM}(2)	Terminal Voltage with Respect to GND	-0.5 to +7.0	-0.5 to +7.0	V
T_{BIAS}	Temperature Under Bias	-55 to +125	-65 to +135	°C
T_{STG}	Storage Temperature	-55 to +125	-65 to +150	°C
P_T(3)	Power Dissipation	1.5	1.5	W
I_{OUT}	DC Output Current	50	50	mA

2720 tbl 01

NOTES:
1. Stresses greater than those listed under ABSOLUTE MAXIMUM RATINGS may cause permanent damage to the device. This is a stress rating only and functional operation of the device at these or any other conditions above those indicated in the operational sections of this specification is not implied. Exposure to absolute maximum rating conditions for extended periods may affect reliability.
2. V_{TERM} must not exceed Vcc + 10% for more than 25%of the cycle time or 10 ns maximum, and is limited to ≤ 20mA for the period of V_{TERM} ≥ Vcc +10%.
3. V_{TERM} = 5.5V.

Capacitance(1) (T_A = +25°C, f = 1.0MHz)

Symbol	Parameter	Conditions(2)	Max.	Unit
C_{IN}	Input Capacitance	V_{IN} = 3dV	11	pF
C_{OUT}	Output Capacitance	V_{OUT} = 3dV	11	pF

2720 tbl 02

NOTES:
1. This parameter is determined by device characterization but is not production tested.
2. 3dV references the interpolated capacitance when the input and output signals switch from 0V to 3V and from 3V to 0V.

Recommended Operating Temperature and Supply Voltage(1,2)

Grade	Ambient Temperature	GND	Vcc
Military	-55°C to +125°C	0V	5.0V ± 10%
Commercial	0°C to +70°C	0V	5.0V ± 10%
Industrial	-40°C to +85°C	0V	5.0V ± 10%

2720 tbl 03

NOTES:
1. This is the parameter T_A.
2. Industrial temperature: for specific speeds, packages and powers contact your sales office.

Recommended DC Operating Conditions

Symbol	Parameter	Min.	Typ.	Max.	Unit
V_{CC}	Supply Voltage	4.5	5.0	5.5	V
GND	Ground	0	0	0	V
V_{IH}	Input High Voltage	2.2	—	6.0(2)	V
V_{IL}	Input Low Voltage	-0.5(1)	—	0.8	V

2720 tbl 04

NOTES:
1. V_{IL} (min.) ≥ -1.5V for pulse width less than 10ns.
2. V_{TERM} must not exceed Vcc + 10%.

DC Electrical Characteristics Over the Operating Temperature and Supply Voltage Range (Vcc = 5V ± 10%)

Symbol	Parameter	Test Conditions	7134SA		7134LA		Unit
			Min.	Max.	Min.	Max.	
$\|I_{LI}\|$	Input Leakage Current(1)	V_{CC} = 5.5V, V_{IN} = 0V to V_{CC}	—	10	—	5	µA
$\|I_{LO}\|$	Output Leakage Current	$\overline{CE}$ - V_{IH}, V_{OUT} = 0V to V_{CC}	—	10	—	5	µA
V_{OL}	Output Low Voltage	I_{OL} = 6mA	—	0.4	—	0.4	V
		I_{OL} = 8mA	—	0.5	—	0.5	V
V_{OH}	Output High Voltage	I_{OH} = -4mA	2.4	—	2.4	—	V

2720 tbl 05

NOTES:
1. At Vcc ≤ 2.0V input leakages are undefined.

DC Electrical Characteristics Over the Operating Temperature and Supply Voltage Range(1,2,4) (V_{CC} = 5.0V ± 10%)

Symbol	Parameter	Test Condition	Version		7134X20 Com'l Only Typ.	7134X20 Com'l Only Max.	7134X25 Com'l & Military Typ.	7134X25 Com'l & Military Max.	7134X35 Com'l & Military Typ.	7134X35 Com'l & Military Max.	Unit
I_{CC}	Dynamic Operating Current (Both Ports Active)	$\overline{CE}$ = V_{IL} Outputs Open f = f_{MAX}(3)	COM'L	SA	170	280	160	280	150	260	mA
				LA	170	240	160	220	150	210	
			MIL & IND	SA	—	—	160	310	150	300	
				LA	—	—	160	260	150	250	
I_{SB1}	Standby Current (Both Ports - TTL Level Inputs)	$\overline{CE}_L$ and $\overline{CE}_R$ = V_{IH} f = f_{MAX}(3)	COM'L	SA	25	100	25	80	25	75	mA
				LA	25	80	25	50	25	45	
			MIL & IND	SA	—	—	25	100	25	75	
				LA	—	—	25	80	25	55	
I_{SB2}	Standby Current (One Port - TTL Level Inputs)	$\overline{CE}$"A" = V_{IL} and $\overline{CE}$"B" = V_{IH} Active Port Outputs Open, f=f_{MAX}(3)	COM'L	SA	105	180	95	180	85	170	mA
				LA	105	150	95	140	85	130	
			MIL & IND	SA	—	—	95	210	85	200	
				LA	—	—	95	170	85	160	
I_{SB3}	Full Standby Current (Both Ports - CMOS Level Inputs)	Both Ports $\overline{CE}_L$ and $\overline{CE}_R \geq V_{CC}$ - 0.2V $V_{IN} \geq V_{CC}$ - 0.2V or $V_{IN} \leq$ 0.2V, f = 0(3)	COM'L	SA	1.0	15	1.0	15	1.0	15	mA
				LA	0.2	4.5	0.2	4.0	0.2	4.0	
			MIL & IND	SA	—	—	1.0	30	1.0	30	
				LA	—	—	0.2	10	0.2	10	
I_{SB4}	Full Standby Current (One Port - CMOS Level Inputs)	One Port $\overline{CE}$"A" or $\overline{CE}$"B" $\geq V_{CC}$ - 0.2V $V_{IN} \geq V_{CC}$ - 0.2V or $V_{IN} \leq$ 0.2V Active Port Outputs Open, f = f_{MAX}(3)	COM'L	SA	105	170	95	170	85	160	mA
				LA	105	130	95	120	85	110	
			MIL & IND	SA	—	—	95	210	85	190	
				LA	—	—	95	150	85	130	

2720 tbl 06a

Symbol	Parameter	Test Condition	Version		7134X45 Com'l & Military Typ.	7134X45 Com'l & Military Max.	7134X55 Com'l, Ind & Military Typ.	7134X55 Com'l, Ind & Military Max.	7134X70 Com'l & Military Typ.	7134X70 Com'l & Military Max.	Unit
I_{CC}	Dynamic Operating Current (Both Ports Active)	$\overline{CE}$ = V_{IL} Outputs Open f = f_{MAX}(3)	COM'L	SA	140	240	140	240	140	240	mA
				LA	140	200	140	200	140	200	
			MIL & IND	SA	140	280	140	270	140	270	
				LA	140	240	140	220	140	220	
I_{SB1}	Standby Current (Both Ports - TTL Level Inputs)	$\overline{CE}_L$ and $\overline{CE}_R$ = V_{IH} f = f_{MAX}(3)	COM'L	SA	25	70	25	70	25	70	mA
				LA	25	40	25	40	25	40	
			MIL & IND	SA	25	70	25	70	25	70	
				LA	25	50	25	50	25	50	
I_{SB2}	Standby Current (One Port - TTL Level Inputs)	$\overline{CE}$"A" = V_{IL} and $\overline{CE}$"B" = V_{IH} Active Port Outputs Open, f=f_{MAX}(3)	COM'L	SA	75	160	75	160	75	160	mA
				LA	75	130	75	130	75	130	
			MIL & IND	SA	75	190	75	180	75	180	
				LA	75	150	75	150	75	150	
I_{SB3}	Full Standby Current (Both Ports - CMOS Level Inputs)	Both Ports $\overline{CE}_L$ and $\overline{CE}_R \geq V_{CC}$ - 0.2V $V_{IN} \geq V_{CC}$ - 0.2V or $V_{IN} \leq$ 0.2V, f = 0(3)	COM'L	SA	1.0	15	1.0	15	1.0	15	mA
				LA	0.2	4.0	0.2	4.0	0.2	4.0	
			MIL & IND	SA	1.0	30	1.0	30	1.0	30	
				LA	0.2	10	0.2	10	0.2	10	
I_{SB4}	Full Standby Current (One Port - CMOS Level Inputs)	One Port $\overline{CE}$"A" or $\overline{CE}$"B" $\geq V_{CC}$ - 0.2V $V_{IN} \geq V_{CC}$ - 0.2V or $V_{IN} \leq$ 0.2V Active Port Outputs Open, f = f_{MAX}(3)	COM'L	SA	75	150	75	150	75	150	mA
				LA	75	100	75	100	75	100	
			MIL & IND	SA	75	180	75	170	75	170	
				LA	75	120	75	120	75	120	

2720 tbl 06b

NOTES:
1. 'X' in part number indicates power rating (SA or LA).
2. V_{CC} = 5V, T_A = +25°C for typical, and parameters are not production tested.
3. f_{MAX} = 1/t_{RC} = All inputs cycling at f = 1/t_{RC} (except Output Enable). f = 0 means no address or control lines change. Applies only to inputs at CMOS level standby I_{SB3}.
4. Industrial temperature: for other speeds, packages and powers contact your sales office.

Data Retention Characteristics Over All Temperature Ranges
(LA Version Only) V_{LC} = 0.2V, V_{HC} = V_{CC} - 0.2V

Symbol	Parameter	Test Condition		Min.	Typ.(1)	Max.	Unit
V_{DR}	V_{CC} for Data Retention	V_{CC} = 2V		2.0	—	—	V
I_{CCDR}	Data Retention Current	$\overline{CE} \geq V_{HC}$	MIL. & IND.	—	100	4000	µA
		$V_{IN} \geq V_{HC}$ or $\leq V_{LC}$	COM'L.	—	100	1500	
t_{CDR}(3)	Chip Deselect to Data Retention Time			0	—	—	ns
t_R(3)	Operation Recovery Time			t_{RC}(2)	—	—	ns

2720 tbl 07

NOTES:
1. V_{CC} = 2V, T_A = +25°C, and are not production tested.
2. t_{RC} = Read Cycle Time.
3. This parameter is guaranteed by device characterization, but not production tested.

Data Retention Waveform

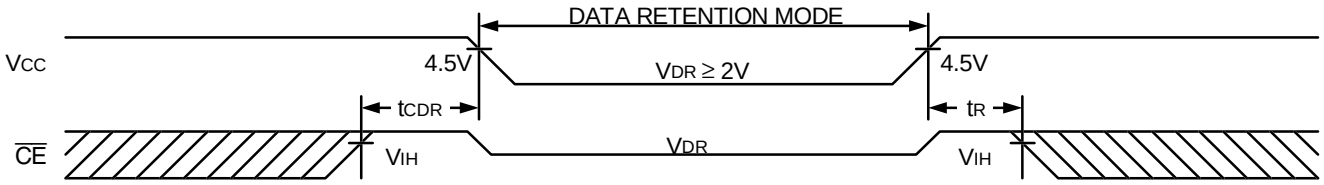

2720 drw 05

AC Test Conditions

Input Pulse Levels	GND to 3.0V
Input Rise/Fall Times	5ns
Input Timing Reference Levels	1.5V
Output Reference Levels	1.5V
Output Load	Figures 1 and 2

2720 tbl 08

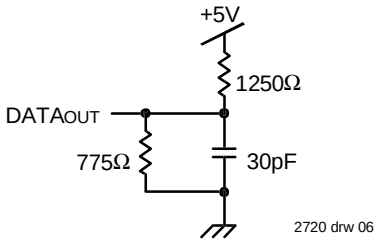

Figure 1. AC Output Test Load

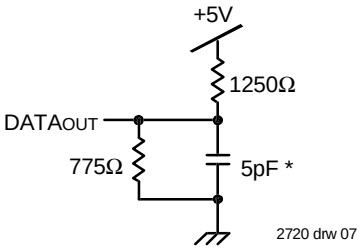

Figure 2. Output Test Load
(for t_{LZ}, t_{HZ}, t_{WZ}, t_{OW})
*Including scope and jig

AC Electrical Characteristics Over the Operating Temperature and Supply Voltage(3,4)

Symbol	Parameter	7134X20 Com'l Only		7134X25 Com'l & Military		7134X35 Com'l & Military		Unit
		Min.	Max.	Min.	Max.	Min.	Max.	
READ CYCLE								
t_{RC}	Read Cycle Time	20	—	25	—	35	—	ns
t_{AA}	Address Access Time	—	20	—	25	—	35	ns
t_{ACE}	Chip Enable Access Time	—	20	—	25	—	35	ns
t_{AOE}	Output Enable Access Time	—	15	—	15	—	20	ns
t_{OH}	Output Hold from Address Change	0	—	0	—	0	—	ns
t_{LZ}	Output Low-Z Time (1,2)	0	—	0	—	0	—	ns
t_{HZ}	Output High-Z Time (1,2)	—	15	—	15	—	20	ns
t_{PU}	Chip Enable to Power Up Time (2)	0	—	0	—	0	—	ns
t_{PD}	Chip Disable to Power Down Time (2)	—	20	—	25	—	35	ns

2720 tbl 09a

Symbol	Parameter	7134X45 Com'l & Military		7134X55 Com'l, Ind & Military		7134X70 Com'l & Military		Unit
		Min.	Max.	Min.	Max.	Min.	Max.	
READ CYCLE								
t_{RC}	Read Cycle Time	45	—	55	—	70	—	ns
t_{AA}	Address Access Time	—	45	—	55	—	70	ns
t_{ACE}	Chip Enable Access Time	—	45	—	55	—	70	ns
t_{AOE}	Output Enable Access Time	—	25	—	30	—	40	ns
t_{OH}	Output Hold from Address Change	0	—	0	—	0	—	ns
t_{LZ}	Output Low-Z Time (1,2)	5	—	5	—	5	—	ns
t_{HZ}	Output High-Z Time (1,2)	—	20	—	25	—	30	ns
t_{PU}	Chip Enable to Power Up Time (2)	0	—	0	—	0	—	ns
t_{PD}	Chip Disable to Power Down Time (2)	—	45	—	50	—	50	ns

2720 tbl 09b

NOTES:
1. Transition is measured ±500mV from Low or High-impedance voltage with the Output Test Load (Figure 2).
2. This parameter is guaranteed by device characterization, but is not production tested.
3. 'X' in part number indicates power rating (SA or LA).
4. Industrial temperature: for other speeds, packages and powers contact your sales office.

Timing Waveform of Read Cycle No. 1, Either Side(1,2,4)

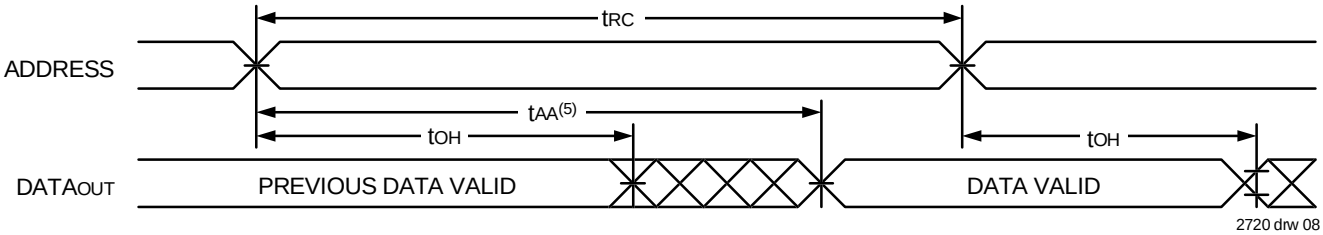

Timing Waveform of Read Cycle No. 2, Either Side(1,3)

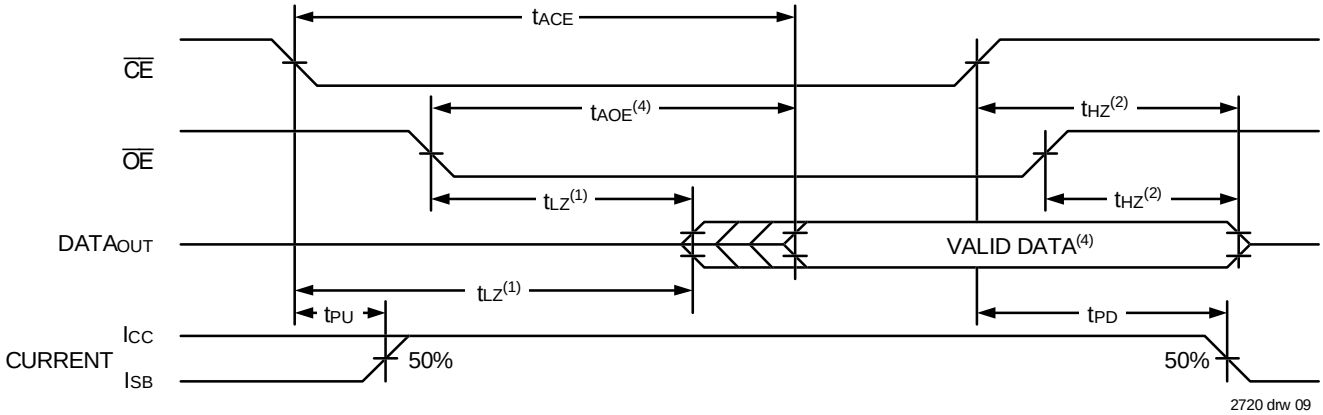

NOTES:
1. Timing depends on which signal is asserted last, $\overline{OE}$ or $\overline{CE}$.
2. Timing depends on which signal is de-asserted first, $\overline{OE}$ or $\overline{CE}$.
3. R/$\overline{W}$ = V_{IH}.
4. Start of valid data depends on which timing becomes effective, t_{AOE}, t_{ACE} or t_{AA}
5. t_{AA} for RAM Address Access and t_{SAA} for Semaphore Address Access.

AC Electrical Characteristics Over the Operating Temperature and Supply Voltage(5,7)

Symbol	Parameter	7134X20 Com'l Only		7134X25 Com'l & Military		7134X35 Com'l & Military		Unit
		Min.	Max.	Min.	Max.	Min.	Max.	
WRITE CYCLE								
t_{WC}	Write Cycle Time	20	—	25	—	35	—	ns
t_{EW}	Chip Enable to End-of-Write	15	—	20	—	30	—	ns
t_{AW}	Address Valid to End-of-Write	15	—	20	—	30	—	ns
t_{AS}	Address Set-up Time	0	—	0	—	0	—	ns
t_{WP}	Write Pulse Width	15	—	20	—	25	—	ns
t_{WR}	Write Recovery Time	0	—	0	—	0	—	ns
t_{DW}	Data Valid to End-of-Write	15	—	15	—	20	—	ns
t_{HZ}	Output High-Z Time(1,2)	—	15	—	15	—	20	ns
t_{DH}	Data Hold Time(3)	0	—	0	—	3	—	ns
t_{WZ}	Write Enable to Output in High-Z(1,2)	—	15	—	15	—	20	ns
t_{OW}	Output Active from End-of-Write(1,2,3)	3	—	3	—	3	—	ns
t_{WDD}	Write Pulse to Data Delay(4)	—	40	—	50	—	60	ns
t_{DDD}	Write Data Valid to Read Data Delay(4,6)	—	30	—	30	—	35	ns

2720 tbl 10a

Symbol	Parameter	7134X45 Com'l & Military		7134X55 Com'l, Ind & Military		7134X70 Com'l & Military		Unit
		Min.	Max.	Min.	Max.	Min.	Max.	
WRITE CYCLE								
t_{WC}	Write Cycle Time	45	—	55	—	70	—	ns
t_{EW}	Chip Enable to End-of-Write	40	—	50	—	60	—	ns
t_{AW}	Address Valid to End-of-Write	40	—	50	—	60	—	ns
t_{AS}	Address Set-up Time	0	—	0	—	0	—	ns
t_{WP}	Write Pulse Width	40	—	50	—	60	—	ns
t_{WR}	Write Recovery Time	0	—	0	—	0	—	ns
t_{DW}	Data Valid to End-of-Write	20	—	25	—	30	—	ns
t_{HZ}	Output High-Z Time(1,2)	—	20	—	25	—	30	ns
t_{DH}	Data Hold Time(3)	3	—	3	—	3	—	ns
t_{WZ}	Write Enable to Output in High-Z(1,2)	—	20	—	25	—	30	ns
t_{OW}	Output Active from End-of-Write(1,2,3)	3	—	3	—	3	—	ns
t_{WDD}	Write Pulse to Data Delay(4)	—	70	—	80	—	90	ns
t_{DDD}	Write Data Valid to Read Data Delay(4,6)	—	45	—	55	—	70	ns

2720 tbl 10b

NOTES:

1. Transition is measured ±500mV from Low or High-impedance voltage with Output Test Load (Figure 2).
2. This parameter is guaranteed by device characterization, but is not production tested.
3. The specification for t_{DH} must be met by the device supplying write data to the RAM under all operating conditions. Although t_{DH} and t_{OW} values will vary over voltage and temperature, the actual t_{DH} will always be smaller than the actual t_{OW}.
4. Port-to-port delay through RAM cells from writing port to reading port, refer to “Timing Waveform of Write with Port-to-Port Read”.
5. 'X' in part number indicates power rating (SA or LA).
6. t_{DDD} = 35ns for military temperature range.
7. Industrial temperature: for other speeds, packages and powers contact your sales office.

Timing Waveform of Write with Port-to-Port Read(1,2,3)

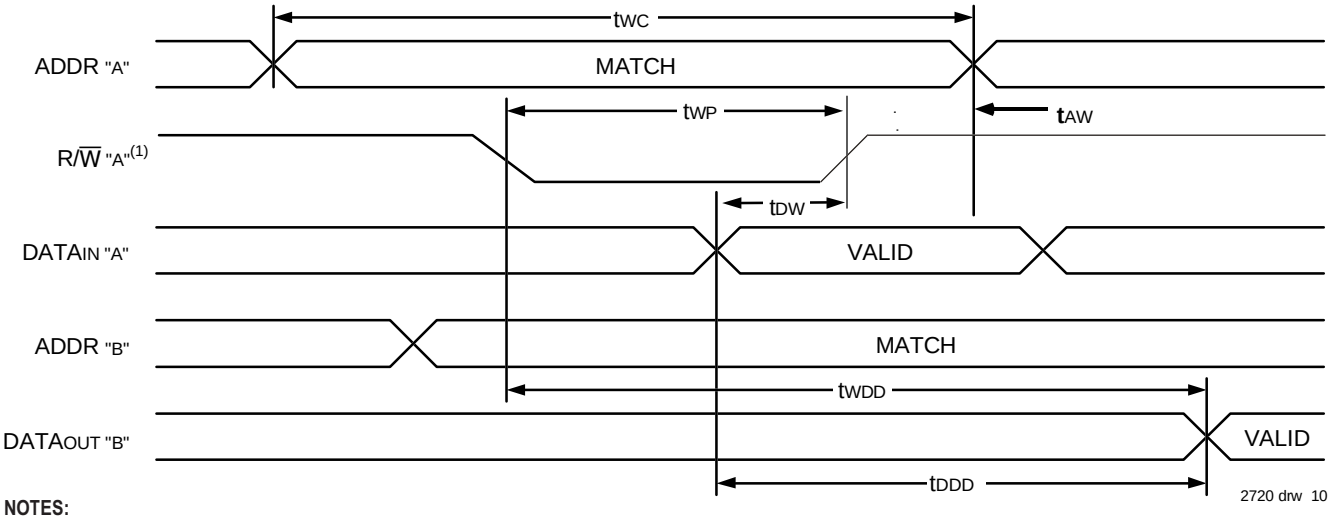

NOTES:
1. Write cycle parameters should be adhered to, in order to ensure proper writing.
2. $\overline{CE}_L = \overline{CE}_R = V_{IL}$. $\overline{OE}_{"B"} = V_{IL}$.
3. Port "A" may be either left or right port. Port "B" is the opposite from port "A".

Timing Waveform of Write Cycle No. 1, R/$\overline{W}$ Controlled Timing(1,5,8)

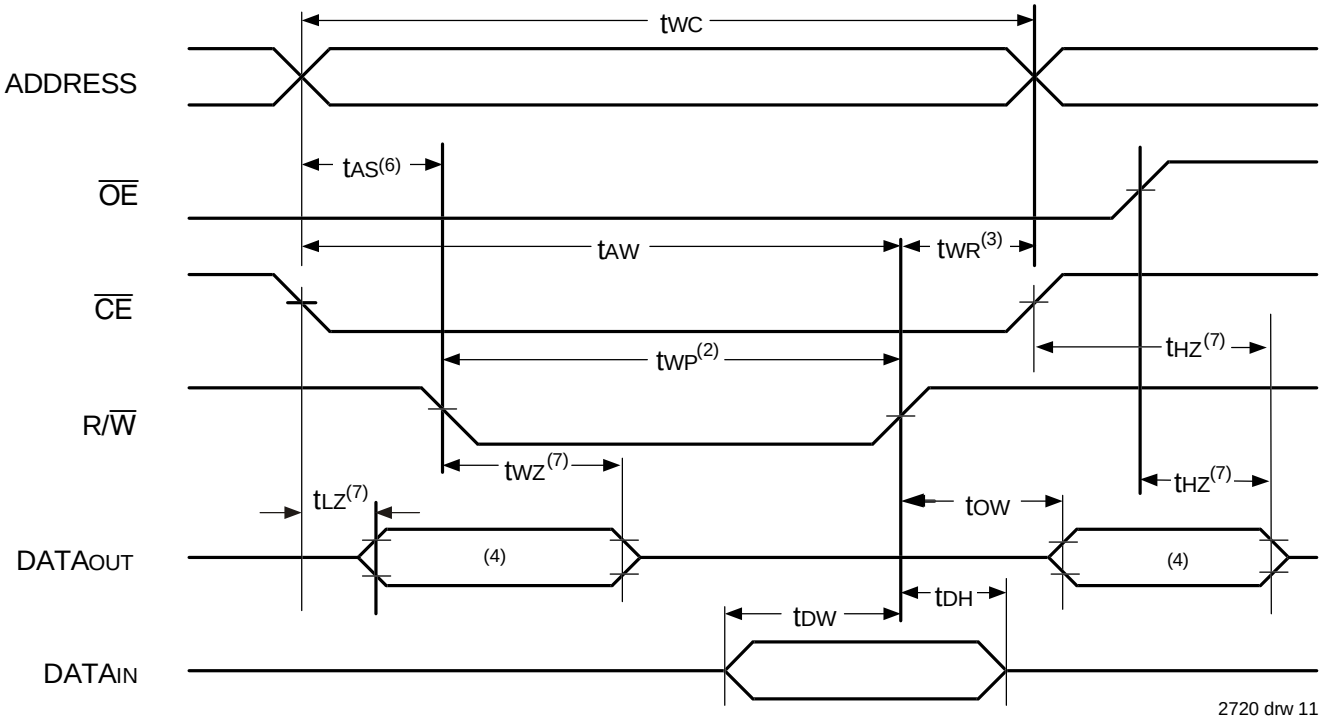

NOTES:
1. R/$\overline{W}$ or $\overline{CE}$ must be HIGH during all address transitions.
2. A write occurs during the overlap (t_{EW} or t_{WP}) of a $\overline{CE}$ =V_{IL} and R/$\overline{W}$ = V_{IL}.
3. t_{WR} is measured from the earlier of $\overline{CE}$ or R/$\overline{W}$ going to V_{IH} to the end-of-write cycle.
4. During this period, the I/O pins are in the output state, and input signals must not be applied.
5. If the $\overline{CE}$ = V_{IL} transition occurs simultaneously with or after the R/$\overline{W}$ = V_{IL} transition, the outputs remain in the High-impedance state.
6. Timing depends on which enable signal ($\overline{CE}$ or R/$\overline{W}$) is asserted last.
7. This parameter is guaranteed by device characterization, but is not production tested. Transition is measured ±500mV from steady state with the Output Test Load (Figure 2).
8. If $\overline{OE}$ = V_{IL} during a R/$\overline{W}$ controlled write cycle, the write pulse width must be the larger of t_{WP} or (t_{WZ} + t_{DW}) to allow the I/O drivers to turn off data to be placed on the bus for the required t_{DW}. If $\overline{OE}$ = V_{IH} during an R/$\overline{W}$ controlled write cycle, this requirement does not apply and the write pulse can be as short as the specified t_{WP}.

Timing Waveform of Write Cycle No. 2, $\overline{CE}$ Controlled Timing(1,4)

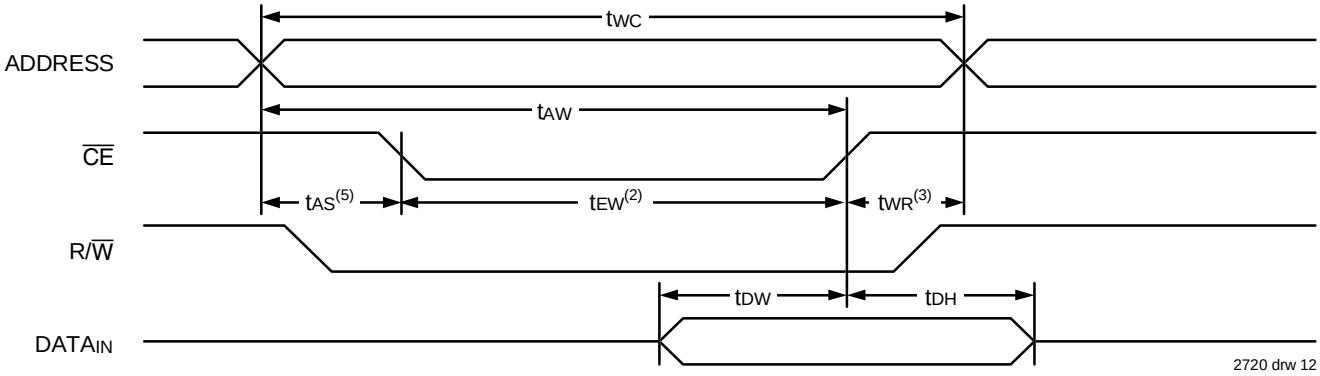

NOTES:
1. R/$\overline{W}$ or $\overline{CE}$ must be HIGH during all address transitions.
2. A write occurs during the overlap (t_{EW} or t_{WP}) of a $\overline{CE}$ =V_{IL} and R/$\overline{W}$ = V_{IL}.
3. t_{WR} is measured from the earlier of $\overline{CE}$ or R/$\overline{W}$ going HIGH to the end-of-write cycle.
4. If the $\overline{CE}$ LOW transition occurs simultaneously with or after the R/$\overline{W}$ LOW transition, the outputs remain in the High-impedance state.
5. Timing depends on which enable signal ($\overline{CE}$ or R/$\overline{W}$) is asserted last.

Functional Description

The IDT7134 provides two ports with separate control, address, and I/O pins that permit independent access for reads or writes to any location in memory. These devices have an automatic power down feature controlled by $\overline{CE}$. The $\overline{CE}$ controls on-chip power down circuitry that permits the respective port to go into standby mode when not selected ($\overline{CE}$ HIGH). When a port is enabled, access to the entire memory array is permitted. Each port has its own Output Enable control ($\overline{OE}$). In the read mode, the port's $\overline{OE}$ turns on the output drivers when set LOW. Non-contention READ/WRITE conditions are illustrated in the table below.

Truth Table I – Read/Write Control

Left or Right Port(1)				
R/$\overline{W}$	$\overline{CE}$	$\overline{OE}$	D_{0-7}	Function
X	H	X	Z	Port Deselected and in Power-Down Mode, I_{SB2} or I_{SB4}
X	H	X	Z	$\overline{CE}_R$ = $\overline{CE}_L$ = H, Power Down Mode I_{SB1} or I_{SB3}
L	L	X	$DATA_{IN}$	Data on port written into memory
H	L	L	$DATA_{OUT}$	Data in memory output on port
X	X	H	Z	High impedance outputs

2720 tbl 11

NOTE:
1. A_{0L} - A_{11L} ≠ A_{0R} - A_{11R}
   "H" = V_{IH}, "L" = V_{IL}, "X" = Don't Care, and "Z" = High Impedance

Ordering Information

IDT XXXX A 999 A A

Device Type | Power | Speed | Package | Process/ Temperature Range

Process/Temperature Range

Blank	Commercial (0°C to +70°C)
I(1)	Industrial (-40°C to +85°C)
B	Military (-55°C to +125°C) Compliant to MIL-PRF-38535 QML

Package

P	48-pin Plastic DIP (P48-1)
C	48-pin Ceramic DIP (C48-2)
J	52-pin PLCC (J52-1)
L48	48-pin LCC (L48-1)
F	48-pin Ceramic Flatpack (F48-1)

Speed (Speed in nanoseconds)

20	Commercial Only
25	Commercial & Military
35	Commercial & Military
45	Commercial & Military
55	Commercial, Industrial & Military
70	Commercial & Military

Power

LA	Low Power
SA	Standard Power

Device Type

7134	32K (4K x 8-Bit) Dual-Port RAM

2720 drw 13

NOTE:
1. Industrial temperature is available for PLCC packages in standard power.
   For other speeds, packages and powers contact your sales office.

Datasheet Document History

3/25/99	Initiated datasheet document history
	Converted to new format
	Cosmetic and typographical corrections
	Pages 2 Added additional notes to pin configurations
6/9/99:	Changed drawing format

CORPORATE HEADQUARTERS
2975 Stender Way
Santa Clara, CA 95054

for SALES:
800-345-7015 or 408-727-5166
fax: 408-492-8674
www.idt.com

for Tech Support:
831-754-4613
DualPortHelp@idt.com

The IDT logo is a registered trademark of Integrated Device Technology, Inc.