FAST CMOS 1-OF-8 DECODER WITH ENABLE

IDT54/74FCT138T/AT/CT

FEATURES:

- **Std., A, and C grades**
- **Low input and output leakage ≤1µA (max.)**
- **CMOS power levels**
- **True TTL input and output compatibility:**
  - *V_{OH} = 3.3V (typ.)*
  - *V_{OL} = 0.3V (typ.)*
- **High Drive outputs (-15mA I_{OH}, 48mA I_{OL})**
- **Meets or exceeds JEDEC standard 18 specifications**
- **Military product compliant to MIL-STD-883, Class B and DESC listed (dual marked)**
- **Power off disable outputs permit "live insertion"**
- **Available in the following packages:**
  - *Industrial: SOIC, QSOP*
  - *Military: CERDIP, LCC*

DESCRIPTION:

The IDT54/74FCT138T is a 1-of-8 decoder built using an advanced dual metal CMOS technology. The IDT54/74FCT138T accepts three binary weighted inputs (A_0, A_1, A_2) and, when enabled, provides eight mutually exclusive active low outputs ($\overline{O}_0$ - $\overline{O}_7$). The IDT54/74FCT138T features three enable inputs, two active low ($\overline{E}_1$, $\overline{E}_2$) and one active high (E_3). All outputs will be high unless $\overline{E}_1$ and $\overline{E}_2$ are low and E_3 is high. This multiple enable function allows easy parallel expansion of the device to a 1-of-32 (5 lines to 32 lines) decoder with just four IDT54/74FCT138T devices and one inverter.

FUNCTIONAL BLOCK DIAGRAM

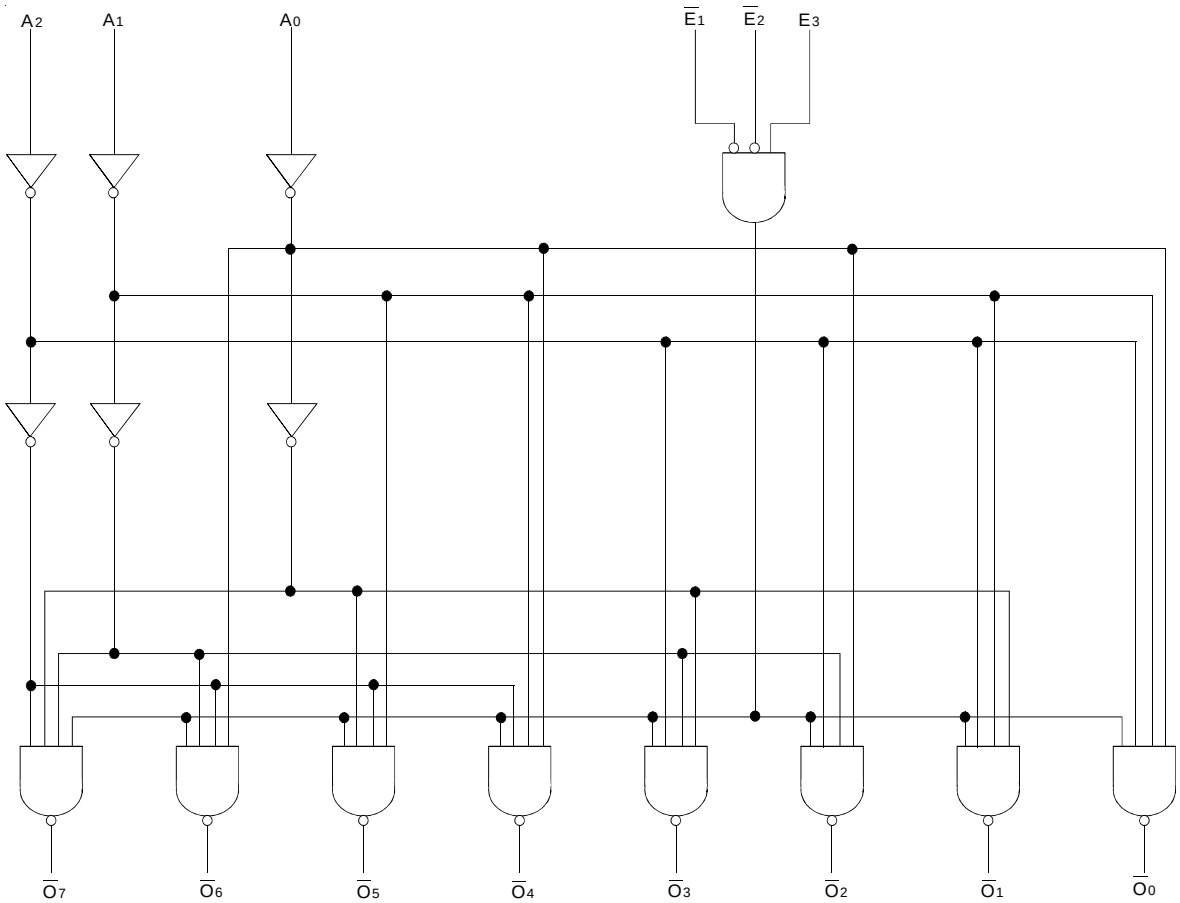

The IDT logo is a registered trademark of Integrated Device Technology, Inc.

© 2002 Integrated Device Technology, Inc.

PIN CONFIGURATION

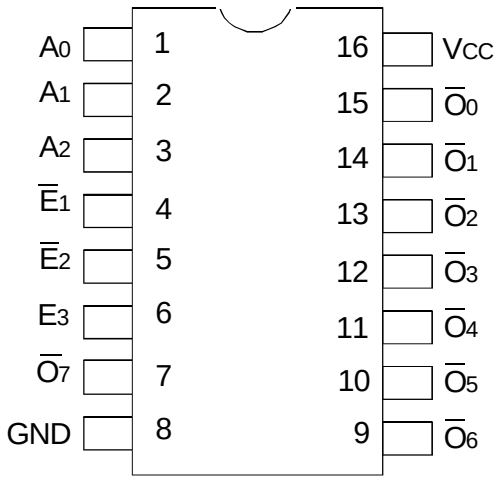

CERDIP/ SOIC/ QSOP
TOP VIEW

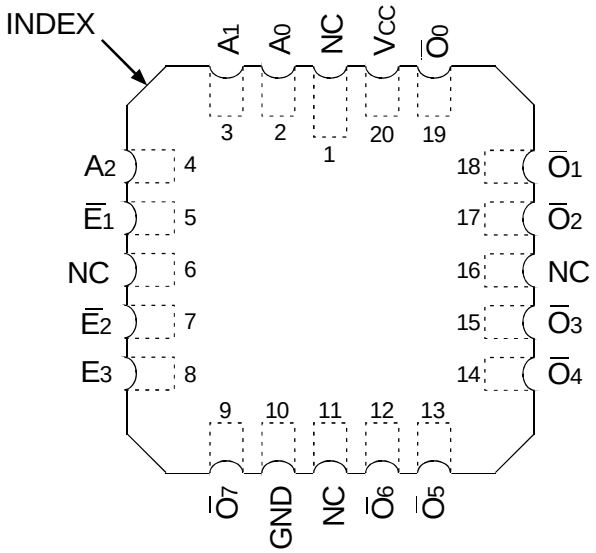

LCC
TOP VIEW

ABSOLUTE MAXIMUM RATINGS(1)

Symbol	Description	Max	Unit
V_{TERM}(2)	Terminal Voltage with Respect to GND	–0.5 to +7	V
V_{TERM}(3)	Terminal Voltage with Respect to GND	–0.5 to V_{CC}+0.5	V
T_{STG}	Storage Temperature	–65 to +150	°C
I_{OUT}	DC Output Current	–60 to +120	mA

NOTES:
1. Stresses greater than those listed under ABSOLUTE MAXIMUM RATINGS may cause permanent damage to the device. This is a stress rating only and functional operation of the device at these or any other conditions above those indicated in the operational sections of this specification is not implied. Exposure to absolute maximum rating conditions for extended periods may affect reliability. No terminal voltage may exceed Vcc by =0.5V unless otherwise noted.
2. Inputs and Vcc terminals only.
3. Output and I/O terminals only.

PIN DESCRIPTION

Pin Names	Description
A_0 - A_2	Address Inputs
$\overline{E}_1$, $\overline{E}_2$	Enable Inputs (Active LOW)
E_3	Enable Input (Active HIGH)
$\overline{O}_0$ - $\overline{O}_7$	Outputs (Active LOW)

CAPACITANCE (T_A = +25°C, F = 1.0MHz)

Symbol	Parameter(1)	Conditions	Typ.	Max.	Unit
C_{IN}	Input Capacitance	V_{IN} = 0V	6	10	pF
C_{OUT}	Output Capacitance	V_{OUT} = 0V	8	12	pF

NOTE:
1. This parameter is measured at characterization but not tested.

FUNCTION TABLE[1]

Inputs						Outputs							
$\overline{E}_1$	$\overline{E}_2$	E_3	A_0	A_1	A_2	$\overline{O}_0$	$\overline{O}_1$	$\overline{O}_2$	$\overline{O}_3$	$\overline{O}_4$	$\overline{O}_5$	$\overline{O}_6$	$\overline{O}_7$
H	X	X	X	X	X	H	H	H	H	H	H	H	H
X	H	X	X	X	X	H	H	H	H	H	H	H	H
X	X	L	X	X	X	H	H	H	H	H	H	H	H
L	L	H	L	L	L	L	H	H	H	H	H	H	H
L	L	H	H	L	L	H	L	H	H	H	H	H	H
L	L	H	L	H	L	H	H	L	H	H	H	H	H
L	L	H	H	H	L	H	H	H	L	H	H	H	H
L	L	H	L	L	H	H	H	H	H	L	H	H	H
L	L	H	H	L	H	H	H	H	H	H	L	H	H
L	L	H	L	H	H	H	H	H	H	H	H	L	H
L	L	H	H	H	H	H	H	H	H	H	H	H	L

NOTE:
1. H = HIGH Voltage Level
   X = Don't Care
   L = LOW Voltage Level

DC ELECTRICAL CHARACTERISTICS OVER OPERATING RANGE

Following Conditions Apply Unless Otherwise Specified:
Industrial: T_A = –40°C to +85°C, V_{CC} = 5.0V ±10%; Military: T_A = –55°C to +125°C, V_{CC} = 5.0V ±10%

Symbol	Parameter	Test Conditions[1]		Min.	Typ.[2]	Max.	Unit
V_{IH}	Input HIGH Level	Guaranteed Logic HIGH Level		2	—	—	V
V_{IL}	Input LOW Level	Guaranteed Logic LOW Level		—	—	0.8	V
I_{IH}	Input HIGH Current[4]	V_{CC} = Max.	V_I = 2.7V	—	—	±1	µA
I_{IL}	Input LOW Current[4]	V_{CC} = Max.	V_I = 0.5V	—	—	±1	
I_I	Input HIGH Current[4]	V_{CC} = Max., V_I = V_{CC} (Max.)		—	—	±1	µA
V_{IK}	Clamp Diode Voltage	V_{CC} = Min., I_{IN} = –18mA		—	–0.7	–1.2	V
I_{OS}	Short Circuit Current	V_{CC} = Max., V_O = GND[3]		–60	–120	–225	mA
V_{OH}	Output HIGH Voltage	V_{CC} = Min V_{IN} = V_{IH} or V_{IL}	I_{OH} = –6mA MIL I_{OH} = –8mA IND	2.4	3.3	—	V
			I_{OH} = –12mA MIL I_{OH} = –15mA IND	2	3	—	
V_{OL}	Output LOW Voltage	V_{CC} = Min V_{IN} = V_{IH} or V_{IL}	I_{OL} = –32mA MIL I_{OL} = –48mA IND	—	0.3	0.5	V
V_H	Input Hysteresis	—		—	200	—	mV
I_{CC}	Quiescent Power Supply Current	V_{CC} = Max. V_{IN} = GND or V_{CC}		—	0.01	1	mA

NOTES:
1. For conditions shown as Min. or Max., use appropriate value specified under Electrical Characteristics for the applicable device type.
2. Typical values are at V_{CC} = 5.0V, +25°C ambient.
3. Not more than one output should be tested at one time. Duration of the test should not exceed one second.
4. The test limit for this parameter is ±5µA at T_A = –55°C.

POWER SUPPLY CHARACTERISTICS

Symbol	Parameter	Test Conditions[1]		Min.	Typ.[2]	Max.	Unit
ΔI_{CC}	Quiescent Power Supply Current TTL Inputs HIGH	V_{CC} = Max. V_{IN} = 3.4V[3]		—	0.5	2	mA
I_{CCD}	Dynamic Power Supply Current[4]	V_{CC} = Max. Outputs Open One Input Toggling 50% Duty Cycle	V_{IN} = V_{CC} V_{IN} = GND	—	0.15	0.3	mA/ MHz
I_C	Total Power Supply Current[5]	V_{CC} = Max. Outputs Open Toggle $\overline{E}_1$, $\overline{E}_2$, or E_3 50% Duty Cycle fo = 10MHz One Input and One Output Toggling	V_{IN} = V_{CC} V_{IN} = GND	—	1.5	4	mA
			V_{IN} = 3.4V V_{IN} = GND	—	1.8	5	

NOTES:
1. For conditions shown as Min. or Max., use appropriate value specified under Electrical Characteristics for the applicable device type.
2. Typical values are at V_{CC} = 5.0V, +25°C ambient.
3. Per TTL driven input; (V_{IN} = 3.4V). All other inputs at V_{CC} or GND.
4. This parameter is not directly testable, but is derived for use in Total Power Supply Calculations.
5. $I_C = I_{QUIESCENT} + I_{INPUTS} + I_{DYNAMIC}$
   $I_C = I_{CC} + \Delta I_{CC} D_H N_T + I_{CCD} (f_O N_O)$
   I_{CC} = Quiescent Current
   ΔI_{CC} = Power Supply Current for a TTL High Input (V_{IN} = 3.4V)
   D_H = Duty Cycle for TTL Inputs High
   N_T = Number of TTL Inputs at D_H
   I_{CCD} = Dynamic Current caused by an Input Transition Pair (HLH or LHL)
   f_O = Output Frequency
   N_O = Number of Outputs at f_O

All currents are in milliamps and all frequencies are in megahertz.

SWITCHING CHARACTERISTICS OVER OPERATING RANGE

Symbol	Parameter	Condition[1]	54FCT138T		54/74FCT138AT				54/74FCT138CT				Unit
			Mil.		Ind.		Mil.		Ind.		Mil.		
			Min.[2]	Max.	Min.[2]	Max.	Min.[2]	Max.	Min.[2]	Max.	Min.[2]	Max.	
t_{PLH} t_{PHL}	Propagation Delay Ax to $\overline{O}$x	C_L = 50pF R_L = 500Ω	1.5	12	1.5	5.8	1.5	7.8	1.5	5.1	1.5	6	ns
t_{PLH} t_{PHL}	Propagation Delay $\overline{E}_1$ or $\overline{E}_2$ to $\overline{O}$x		1.5	12.5	1.5	5.9	1.5	8	1.5	5.2	1.5	6.1	ns
t_{PLH} t_{PHL}	Propagation Delay E_3 to $\overline{O}$x		1.5	12.5	1.5	5.9	1.5	8	1.5	5.2	1.5	6.1	ns

NOTES:
1. See test circuit and waveforms.
2. Minimum limits are guaranteed but not tested on Propagation Delays.

TEST CIRCUITS AND WAVEFORMS

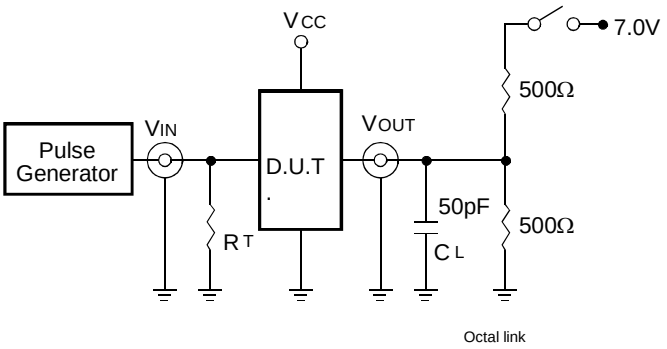

Test Circuits for All Outputs

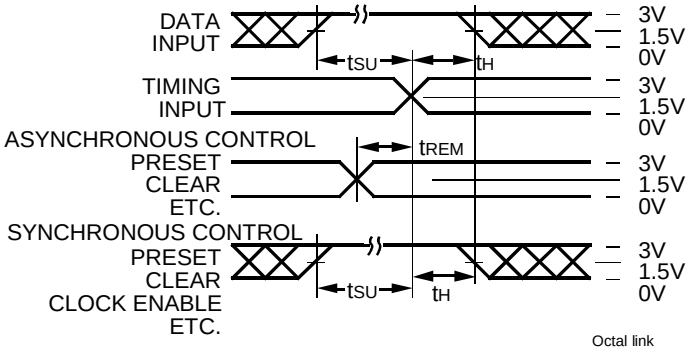

Set-Up, Hold, and Release Times

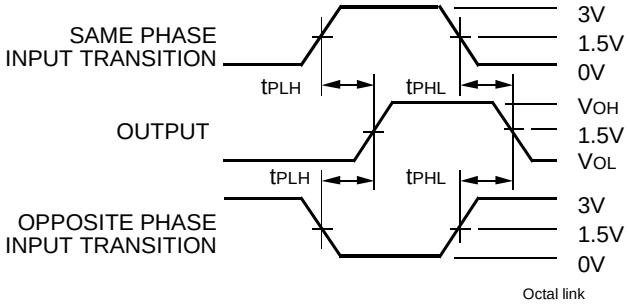

Propagation Delay

SWITCH POSITION

Test	Switch
Open Drain Disable Low Enable Low	Closed
All Other Tests	Open

DEFINITIONS:

C_L = Load capacitance: includes jig and probe capacitance.

R_T = Termination resistance: should be equal to Z_{OUT} of the Pulse Generator.

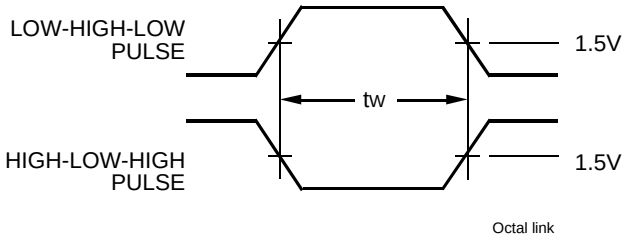

Pulse Width

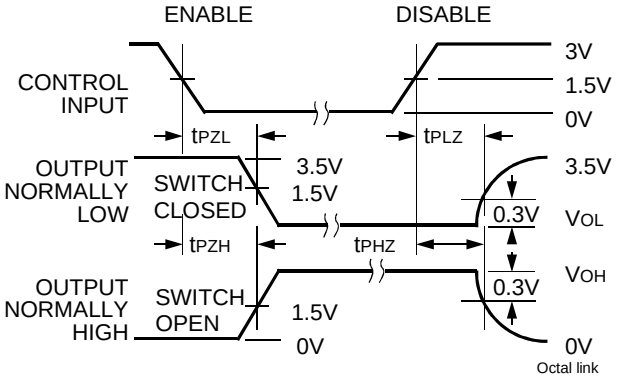

Enable and Disable Times

NOTES:

1. Diagram shown for input Control Enable-LOW and input Control Disable-HIGH.
2. Pulse Generator for All Pulses: Rate ≤ 1.0MHz; t_F ≤ 2.5ns; t_R ≤ 2.5ns.

ORDERING INFORMATION

IDT ___XX___ FCT ___XXXX___ ___XX___ ___X___

Temp. Range | Device Type | Package | Process

Process

Blank	Industrial
B	MIL-STD-883, Class B

Package

	Industrial Options
SO	Small Outline IC
Q	Quarter-size Small Outline Package
	Military Options
D	CERDIP
L	Leadless Chip Carrier

Device Type

138T	1-of-8 Decoder
138AT	
138CT	

Temp. Range

54	– 55°C to +125°C
74	– 40°C to +85°C

DATA SHEET DOCUMENT HISTORY

3/25/2002	Removed standard speed grade
6/20/2002	Updated as per PNC Logic-00-07 and Logic-01-04

CORPORATE HEADQUARTERS
2975 Stender Way
Santa Clara, CA 95054

for SALES:
800-345-7015 or 408-727-6116
fax: 408-492-8674
www.idt.com

for Tech Support:
logichelp@idt.com
(408) 654-6459