HIGH-SPEED 8K x 18 DUAL-PORT STATIC RAM

IDT7035S/L

Features

- True Dual-Ported memory cells which allow simultaneous reads of the same memory location
- High-speed access
  - *Commercial: 15/20ns (max.)*
- Low-power operation
  - *IDT7035S*
    Active: 800mW (typ.)
    Standby: 5mW (typ.)
  - *IDT7035L*
    Active: 800mW (typ.)
    Standby: 1mW (typ.)
- Separate upper-byte and lower-byte control for multiplexed bus compatibility
- IDT7035 easily expands data bus width to 36 bits or more using the Master/Slave select when cascading more than one device
- M/$\overline{S}$ = H for $\overline{BUSY}$ output flag on Master
  M/$\overline{S}$ = L for $\overline{BUSY}$ input on Slave
- Interrupt Flag
- On-chip port arbitration logic
- Full on-chip hardware support of semaphore signaling between ports
- Fully asynchronous operation from either port
- Battery backup operation—2V data retention
- TTL-compatible, single 5V (±10%) power supply
- Available in 100-pin Thin Quad Flatpack
  Industrial temperature range (–40°C to +85°C) is available for selected speeds

Functional Block Diagram

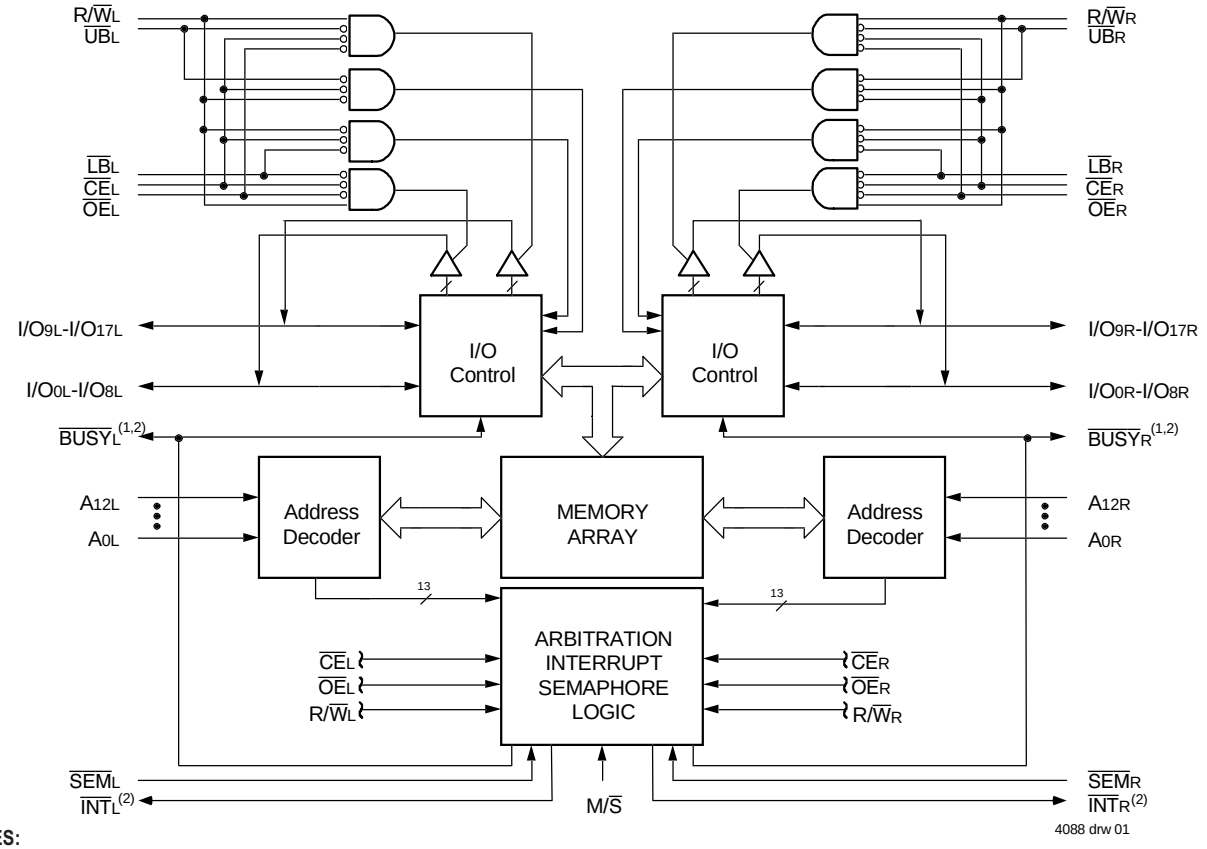

4088 drw 01

NOTES:
1. (MASTER): $\overline{BUSY}$ is output; (SLAVE): $\overline{BUSY}$ is input.
2. $\overline{BUSY}$ outputs and $\overline{INT}$ outputs are non-tri-stated push-pull.

SEPTEMBER 1999

©1999 Integrated Device Technology, Inc.

Description

The IDT7035 is a high-speed 8K x 18 Dual-Port Static RAM. The IDT7035 is designed to be used as a stand-alone 144K-bit Dual-Port RAM or as a combination MASTER/SLAVE Dual-Port RAM for 36-bit or more word systems. Using the IDT MASTER/SLAVE Dual-Port RAM approach in 36-bit or wider memory system applications results in full-speed, error-free operation without the need for additional discrete logic.

This device provides two independent ports with separate control, address, and I/O pins that permit independent, asynchronous access for reads or writes to any location in memory. An automatic power down feature controlled by Chip Enable ($\overline{CE}$) permits the on-chip circuitry of each port to enter a very low standby power mode.

The IDT7035 utilizes a 18-bit wide data path to alow for parity at the user's option. This feature is especially useful in data communications applications where it is necessary to use a parity bit for transmission/ reception error checking.

Fabricated using IDT's CMOS high-performance technology, these devices typically operate on only 800mW of power. Low-power (L) versions offer battery backup data retention capability with typical power consumption of 500µW from a 2V battery.

Pin Configurations[1,2,3]

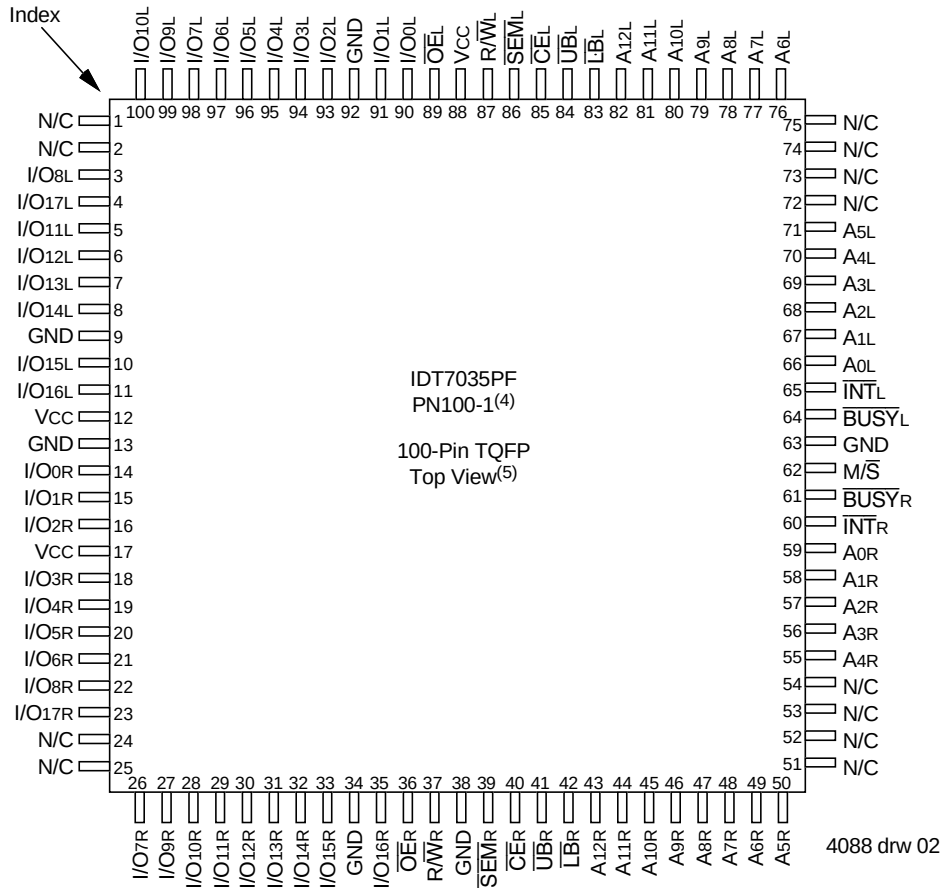

NOTES:

1. All Vcc pins must be connected to power supply.
2. All GND pins must be connected to ground supply.
3. Package body is approximately 14mm x 14mm x 1.4mm.
4. This package code is used to reference the package diagram.
5. This text does not indicate orientation of the actual part-marking.

Pin Names

Left Port	Right Port	Names
$\overline{CE}_L$	$\overline{CE}_R$	Chip Enable
R/$\overline{W}_L$	R/$\overline{W}_R$	Read/Write Enable
$\overline{OE}_L$	$\overline{OE}_R$	Output Enable
A_{0L} - A_{12L}	A_{0R} - A_{12R}	Address
I/O_{0L} - I/O_{17L}	I/O_{0R} - I/O_{17R}	Data Input/Output
$\overline{SEM}_L$	$\overline{SEM}_R$	Semaphore Enable
$\overline{UB}_L$	$\overline{UB}_R$	Upper Byte Select
$\overline{LB}_L$	$\overline{LB}_R$	Lower Byte Select
$\overline{INT}_L$	$\overline{INT}_R$	Interrupt Flag
$\overline{BUSY}_L$	$\overline{BUSY}_R$	Busy Flag
M/$\overline{S}$		Master or Slave Select
V_{CC}		Power
GND		Ground

4088 tbl 01

Truth Table I: Non-Contention Read/Write Control

Inputs[1]						Outputs		
$\overline{CE}$	R/$\overline{W}$	$\overline{OE}$	$\overline{UB}$	$\overline{LB}$	$\overline{SEM}$	I/O_{9-17}	I/O_{0-8}	Mode
H	X	X	X	X	H	High-Z	High-Z	Deselected: Power-Down
X	X	X	H	H	H	High-Z	High-Z	Both Bytes Deselected
L	L	X	L	H	H	$DATA_{IN}$	High-Z	Write to Upper Byte Only
L	L	X	H	L	H	High-Z	$DATA_{IN}$	Write to Lower Byte Only
L	L	X	L	L	H	$DATA_{IN}$	$DATA_{IN}$	Write to Both Bytes
L	H	L	L	H	H	$DATA_{OUT}$	High-Z	Read Upper Byte Only
L	H	L	H	L	H	High-Z	$DATA_{OUT}$	Read Lower Byte Only
L	H	L	L	L	H	$DATA_{OUT}$	$DATA_{OUT}$	Read Both Bytes
X	X	H	X	X	X	High-Z	High-Z	Outputs Disabled

4088 tbl 02

NOTE:
1. $A_{0L} — A_{12L} \neq A_{0R} — A_{12R}$

Truth Table II: Semaphore Read/Write Control(1)

Inputs						Outputs		
$\overline{CE}$	R/$\overline{W}$	$\overline{OE}$	$\overline{UB}$	$\overline{LB}$	$\overline{SEM}$	I/O_{9-17}	I/O_{0-8}	Mode
H	H	L	X	X	L	$DATA_{OUT}$	$DATA_{OUT}$	Read Data in Semaphore Flag
X	H	L	H	H	L	$DATA_{OUT}$	$DATA_{OUT}$	Read Data in Semaphore Flag
H	↑	X	X	X	L	$DATA_{IN}$	$DATA_{IN}$	Write I/O_0 into Semaphore Flag
X	↑	X	H	H	L	$DATA_{IN}$	$DATA_{IN}$	Write I/O_0 into Semaphore Flag
L	X	X	L	X	L	—	—	Not Allowed
L	X	X	X	L	L	—	—	Not Allowed

4088 tbl 03

NOTE:
1. There are eight semaphore flags written to via I/O_0 and read from I/O_0 - I/O_{17}. These eight semaphores are addressed by A_0 - A_2.

Absolute Maximum Ratings(1)

Symbol	Rating	Commercial & Industrial	Unit
V_{TERM}(2)	Terminal Voltage with Respect to GND	-0.5 to +7.0	V
T_{BIAS}	Temperature Under Bias	-55 to +125	°C
T_{STG}	Storage Temperature	-55 to +125	°C
I_{OUT}	DC Output Current	50	mA

4088 tbl 04

NOTES:
1. Stresses greater than those listed under ABSOLUTE MAXIMUM RATINGS may cause permanent damage to the device. This is a stress rating only and functional operation of the device at these or any other conditions above those indicated in the operational sections of this specification is not implied. Exposure to absolute maximum rating conditions for extended periods may affect reliability.
2. V_{TERM} must not exceed Vcc + 10% for more than 25% of the cycle time or 10ns maximum, and is limited to ≤ 20 mA for the period over V_{TERM} ≥ Vcc + 10%.

Capacitance (T_A = +25°C, f = 1.0MHz) (1)

Symbol	Parameter	Conditions(2)	Max.	Unit
C_{IN}	Input Capacitance	V_{IN} = 3dV	9	pF
C_{OUT}	Output Capacitance	V_{OUT} = 3dV	10	pF

4088 tbl 07

NOTES:
1. This parameter is determined by device characterization but is not production tested. For TQFP Package Only.
2. 3dV references the interpolated capacitance when the input and output signals switch from 0V to 3V or from 3V to 0V.

Maximum Operating Temperature and Supply Voltage(1,2)

Grade	Ambient Temperature	GND	Vcc
Commercial	0°C to +70°C	0V	5.0V ± 10%
Industrial	-40°C to +85°C	0V	5.0V ± 10%

4088 tbl 05

NOTES:
1. This is the parameter T_A.
2. Industrial temperature: for specific speeds, packages and powers contact your sales office.

Recommended DC Operating Conditions

Symbol	Parameter	Min.	Typ.	Max.	Unit
V_{CC}	Supply Voltage	4.5	5.0	5.5	V
GND	Ground	0	0	0	V
V_{IH}	Input High Voltage	2.2	—	6.0(2)	V
V_{IL}	Input Low Voltage	-0.5(1)	—	0.8	V

4088 tbl 06

NOTES:
1. V_{IL} ≥ -1.5V for pulse width less than 10ns.
2. V_{TERM} must not exceed Vcc + 10%.

DC Electrical Characteristics Over the Operating Temperature and Supply Voltage Range (V_{CC} = 5.0V ± 10%)

Symbol	Parameter	Test Conditions	7035S		7035L		Unit
			Min.	Max.	Min.	Max.	
$\|I_{LI}\|$	Input Leakage Current[1]	V_{CC} = 5.5V, V_{IN} = 0V to V_{CC}	—	10	—	5	µA
$\|I_{LO}\|$	Output Leakage Current	$\overline{CE}$ = V_{IH}, V_{OUT} = 0V to V_{CC}	—	10	—	5	µA
V_{OL}	Output Low Voltage	I_{OL} = 4mA	—	0.4	—	0.4	V
V_{OH}	Output High Voltage	I_{OH} = -4mA	2.4	—	2.4	—	V

4088 tbl 08

NOTE:
1. At V_{CC} ≤ 2.0V input leakages are undefined.

DC Electrical Characteristics Over the Operating Temperature and Supply Voltage Range[1,6] (V_{CC} = 5.0V ± 10%)

Symbol	Parameter	Test Condition	Version		7035X15 Com'l Only Typ.[2]	7035X15 Com'l Only Max.	7035X20 Com'l Only Typ.[2]	7035X20 Com'l Only Max.	Unit
I_{CC}	Dynamic Operating Current (Both Ports Active)	$\overline{CE}$ = V_{IL}, Outputs Open $\overline{SEM}$ = V_{IH} f = f_{MAX}[3]	COM'L	S	170	310	160	290	mA
				L	170	260	160	240	
			IND	S	—	—	160	370	
				L	—	—	160	320	
I_{SB1}	Standby Current (Both Ports - TTL Level Inputs)	$\overline{CE}_L$ = $\overline{CE}_R$ = V_{IH} $\overline{SEM}_R$ = $\overline{SEM}_L$ = V_{IH} f = f_{MAX}[3]	COM'L	S	20	60	20	60	mA
				L	20	50	20	50	
			IND	S	—	—	20	90	
				L	—	—	20	70	
I_{SB2}	Standby Current (One Port - TTL Level Inputs)	$\overline{CE}_{"A"}$ = V_{IL} and $\overline{CE}_{"B"}$ = V_{IH}[5] Active Port Outputs Open, f=f_{MAX}[3] $\overline{SEM}_R$ = $\overline{SEM}_L$ = V_{IH}	COM'L	S	105	190	95	180	mA
				L	105	160	95	150	
			IND	S	—	—	95	240	
				L	—	—	95	210	
I_{SB3}	Full Standby Current (Both Ports - All CMOS Level Inputs)	Both Ports $\overline{CE}_L$ and $\overline{CE}_R$ ≥ V_{CC} - 0.2V V_{IN} ≥ V_{CC} - 0.2V or V_{IN} ≤ 0.2V, f = 0[4] $\overline{SEM}_R$ = $\overline{SEM}_L$ ≥ V_{CC} - 0.2V	COM'L	S	1.0	15	1.0	15	mA
				L	0.2	5	0.2	5	
			IND	S	—	—	1.0	30	
				L	—	—	0.2	10	
I_{SB4}	Full Standby Current (One Port - All CMOS Level Inputs)	$\overline{CE}_{"A"}$ ≤ 0.2V and $\overline{CE}_{"B"}$ ≥ V_{CC} - 0.2V[5] $\overline{SEM}_R$ = $\overline{SEM}_L$ ≥ V_{CC} - 0.2V V_{IN} ≥ V_{CC} - 0.2V or V_{IN} ≤ 0.2V Active Port Outputs Open f = f_{MAX}[3]	COM'L	S	100	170	90	155	mA
				L	100	140	90	130	
			IND	S	—	—	90	225	
				L	—	—	90	200	

4088 tbl 09

NOTES:
1. 'X' in part numbers indicates power rating (S or L)
2. V_{CC} = 5V, T_A = +25°C, and are not production tested. Icc dc = 120mA (TYP)
3. At f = f_{MAX}, address and I/O's are cycling at the maximum frequency read cycle of 1/t_{RC}, and using "AC Test Conditions" of input levels of GND to 3V.
4. f = 0 means no address or control lines change.
5. Port "A" may be either left or right port. Port "B" is the opposite from port "A".
6. Industrial temperature: for specific speeds, packages and powers contact your sales office.

Data retention Characteristics Over All Temperature Ranges (L Version Only) (V_{LC} = 0.2V, V_{HC} = V_{CC} - 0.2V)[4]

Symbol	Parameter	Test Condition		Min.	Typ.[1]	Max.	Unit
V_{DR}	V_{CC} for Data Retention	V_{CC} = 2V		2.0	—	—	V
I_{CCDR}	Data Retention Current	$\overline{CE} \geq V_{HC}$	IND.	—	100	4000	µA
		$V_{IN} \geq V_{HC}$ or $\leq V_{LC}$	COM'L.	—	100	1500	
t_{CDR}[3]	Chip Deselect to Data Retention Time	$\overline{SEM} \geq V_{HC}$		0	—	—	ns
t_R[3]	Operation Recovery Time			t_{RC}[2]	—	—	ns

4088 tbl 10

NOTES:
1. T_A = +25°C, V_{CC} = 2V, not production tested.
2. t_{RC} = Read Cycle Time
3. This parameter is guaranteed by characterization, but is not production tested.
4. At V_{CC} ≤ 2.0V input leakages are undefined.

Data Retention Waveform

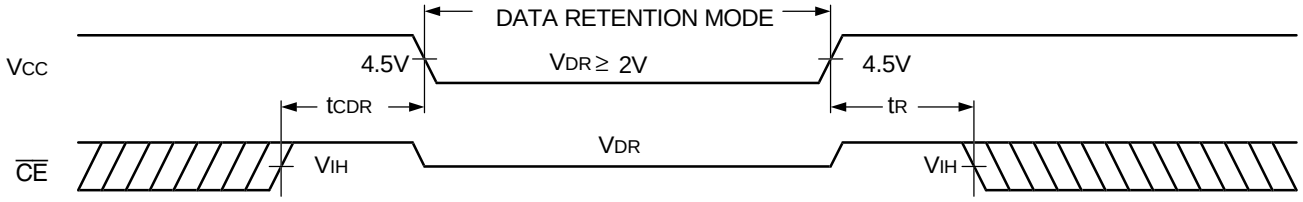

4088 drw 03

AC Test Conditions

Input Pulse Levels	GND to 3.0V
Input Rise/Fall Times	5ns Max.
Input Timing Reference Levels	1.5V
Output Reference Levels	1.5V
Output Load	Figures 1 and 2

4088 tbl 11

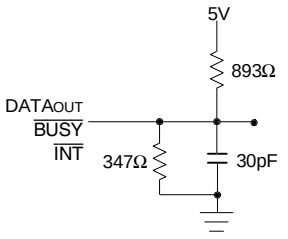

Figure 1. AC Output Test Load

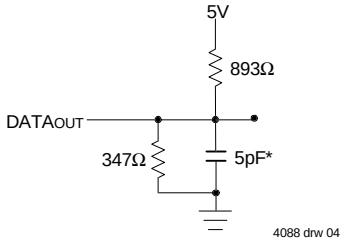

4088 drw 04

Figure 2. Output Test Load
(for tLZ, tHZ, tWZ, tOW)
* including scope and jig.

AC Electrical Characteristics Over the Operating Temperature and Supply Voltage Range(4,5)

		7035X15 Com'l Only		7035X20 Com'l Only		
Symbol	Parameter	Min.	Max.	Min.	Max.	Unit
READ CYCLE						
t_{RC}	Read Cycle Time	15	—	20	—	ns
t_{AA}	Address Access Time	—	15	—	20	ns
t_{ACE}	Chip Enable Access Time(3)	—	15	—	20	ns
t_{ABE}	Byte Enable Access Time(3)	—	15	—	20	ns
t_{AOE}	Output Enable Access Time	—	10	—	12	ns
t_{OH}	Output Hold from Address Change	3	—	3	—	ns
t_{LZ}	Output Low-Z Time(1,2)	3	—	3	—	ns
t_{HZ}	Output High-Z Time(1,2)	—	10	—	12	ns
t_{PU}	Chip Enable to Power Up Time(2)	0	—	0	—	ns
t_{PD}	Chip Disable to Power Down Time(2)	—	15	—	20	ns
t_{SOP}	Semaphore Flag Update Pulse ($\overline{OE}$ or $\overline{SEM}$)(3)	10	—	10	—	ns
t_{SAA}	Semaphore Address Access Time(3)	—	15	—	20	ns

4088 tbl 12

NOTES:
1. Transition is measured ±500mV from Low or High-impedance voltage with Output Test Load (Figure 2).
2. This parameter is guaranteed by device characterization, but is not production tested.
3. To access RAM, $\overline{CE}$ = V_{IL}, $\overline{UB}$ or $\overline{LB}$ = V_{IL}, and $\overline{SEM}$ = V_{IH}. To access semaphore, $\overline{CE}$ = V_{IH} or $\overline{UB}$ & $\overline{LB}$ = V_{IH}, and $\overline{SEM}$ = V_{IL}.
4. 'X' in part numbers indicates power rating (S or L).
5. Industrial temperature: for specific speeds, packages and powers contact your sales office.

Waveform of Read Cycles(5)

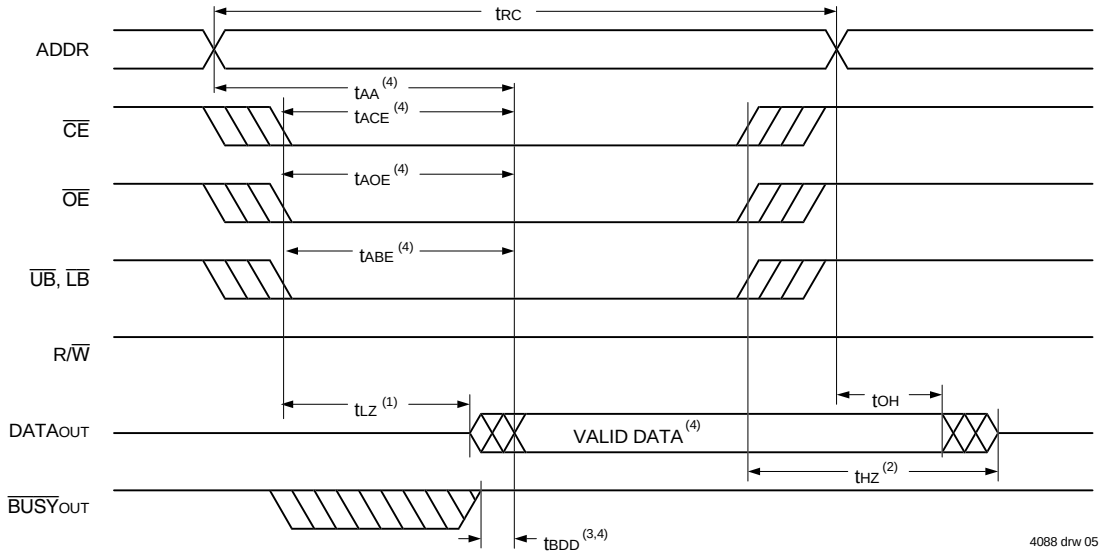

NOTES:
1. Timing depends on which signal is asserted last, $\overline{OE}$, $\overline{CE}$, $\overline{LB}$, or $\overline{UB}$.
2. Timing depends on which signal is de-asserted first, $\overline{CE}$, $\overline{OE}$, $\overline{LB}$, or $\overline{UB}$.
3. t_{BDD} delay is required only in case where opposite port is completing a write operation to the same address location for simultaneous read operations $\overline{BUSY}$ has no relation to valid output data.
4. Start of valid data depends on which timing becomes effective last t_{ABE}, t_{AOE}, t_{ACE}, t_{AA} or t_{BDD}.
5. $\overline{SEM}$ = V_{IH}.

Timing of Power-Up Power-Down

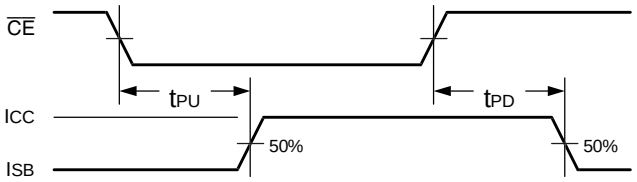

4088 drw 06

AC Electrical Characteristics Over the Operating Temperature and Supply Voltage(5,6)

Symbol	Parameter	7035X15 Com'l Only		7035X20 Com'l Only		Unit
		Min.	Max.	Min.	Max.	
WRITE CYCLE						
t_{WC}	Write Cycle Time	15	—	20	—	ns
t_{EW}	Chip Enable to End-of-Write(3)	12	—	15	—	ns
t_{AW}	Address Valid to End-of-Write	12	—	15	—	ns
t_{AS}	Address Set-up Time(3)	0	—	0	—	ns
t_{WP}	Write Pulse Width	12	—	15	—	ns
t_{WR}	Write Recovery Time	0	—	0	—	ns
t_{DW}	Data Valid to End-of-Write	10	—	15	—	ns
t_{HZ}	Output High-Z Time(1,2)	—	10	—	12	ns
t_{DH}	Data Hold Time(4)	0	—	0	—	ns
t_{WZ}	Write Enable to Output in High-Z (1,2)	—	10	—	12	ns
t_{OW}	Output Active from End-of-Write(1,2,4)	0	—	0	—	ns
t_{SWRD}	$\overline{SEM}$ Flag Write to Read Time	5	—	5	—	ns
t_{SPS}	$\overline{SEM}$ Flag Contention Window	5	—	5	—	ns

4088 tbl 13

NOTES:
1. Transition is measured ±500mV from Low or High-impedance voltage with the Output Test Load (Figure 2).
2. This parameter is guaranteed by device characterization, but is not production tested.
3. To access RAM, $\overline{CE}$ = V_{IL}, $\overline{UB}$ or $\overline{LB}$ = V_{IL}, $\overline{SEM}$ = V_{IH}. To access semaphore, $\overline{CE}$ = V_{IH} or $\overline{UB}$ & $\overline{LB}$ = V_{IH}, and $\overline{SEM}$ = V_{IL}. Either condition must be valid for the entire t_{EW} time.
4. The specification for t_{DH} must be met by the device supplying write data to the RAM under all operating conditions. Although t_{DH} and t_{OW} values will vary over voltage and temperature, the actual t_{DH} will always be smaller than the actual t_{OW}.
5. 'X' in part numbers indicates power rating (S or L).
6. Industrial temperature: for specific speeds, packages and powers contact your sales office.

Timing Waveform of Write Cycle No. 1, R/$\overline{W}$ Controlled Timing(1,5,8)

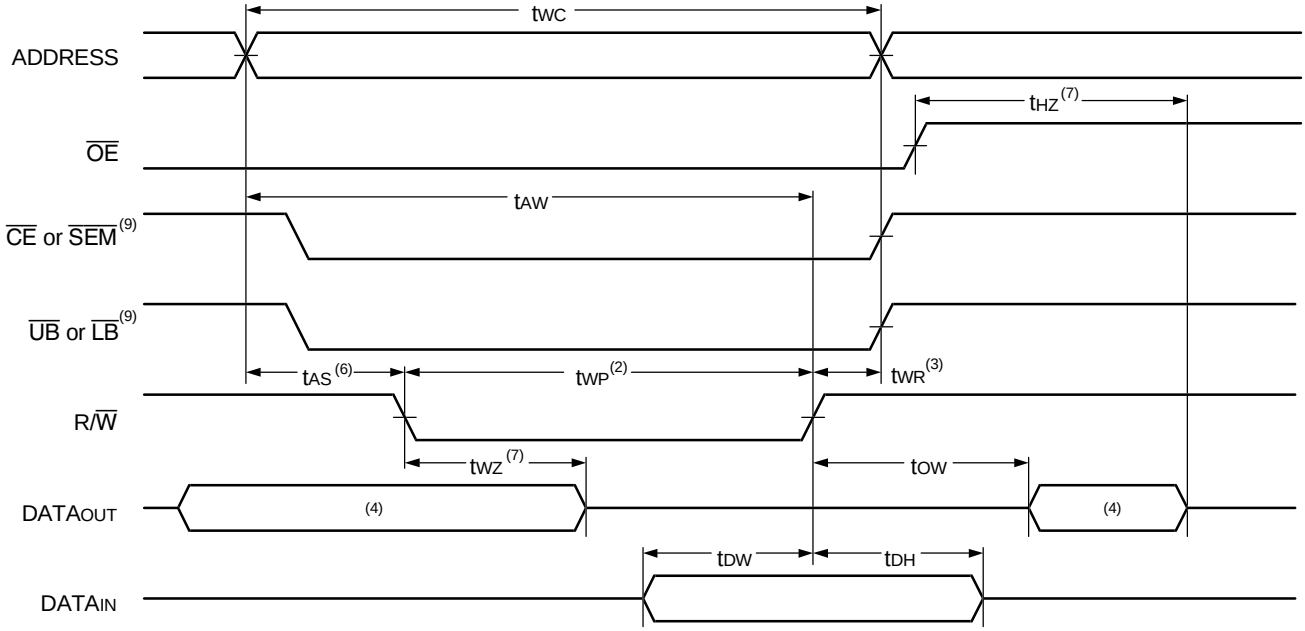

4088 drw 07

Timing Waveform of Write Cycle No. 2, $\overline{CE}$, $\overline{UB}$, $\overline{LB}$ Controlled Timing(1,5)

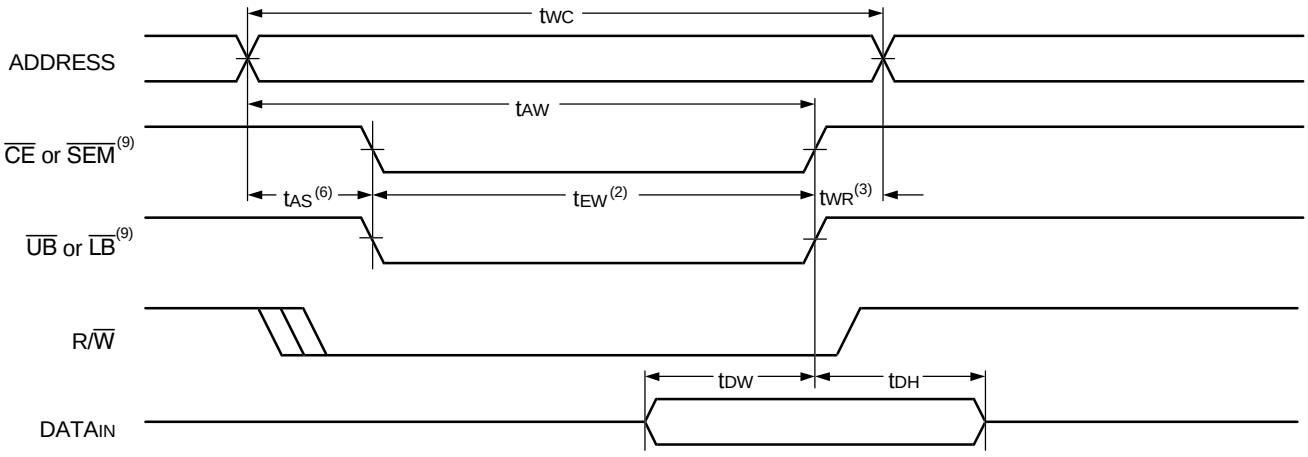

4088 drw 08

NOTES:

1. R/$\overline{W}$ or $\overline{CE}$ or $\overline{UB}$ & $\overline{LB}$ must be HIGH during all address transitions.
2. A write occurs during the overlap (t_{EW} or t_{WP}) of a LOW $\overline{UB}$ or $\overline{LB}$ and a LOW $\overline{CE}$ and a LOW R/$\overline{W}$ for memory array writing cycle.
3. t_{WR} is measured from the earlier of $\overline{CE}$ or R/$\overline{W}$ (or $\overline{SEM}$ or R/$\overline{W}$) going HIGH to the end-of-write cycle.
4. During this period, the I/O pins are in the output state and input signals must not be applied.
5. If the $\overline{CE}$ or $\overline{SEM}$ LOW transition occurs simultaneously with or after the R/$\overline{W}$ LOW transition, the outputs remain in the high-impedance state.
6. Timing depends on which enable signal is asserted last, $\overline{CE}$, R/$\overline{W}$, or byte control.
7. This parameter is guaranteed by device characterization, but is not production tested. Transition is measured ±500mV from steady state with Output Test Load (Figure 2).
8. If $\overline{OE}$ is LOW during R/$\overline{W}$ controlled write cycle, the write pulse width must be the larger of t_{WP} or (t_{WZ} + t_{DW}) to allow the I/O drivers to turn off and data to be placed on the bus for the required t_{DW}. If $\overline{OE}$ is HIGH during an R/W controlled write cycle, this requirement does not apply and the write pulse can be as short as the specified t_{WP}.
9. To access RAM, $\overline{CE}$ = V_{IL}, $\overline{UB}$ or $\overline{LB}$ = V_{IL}, and $\overline{SEM}$ = V_{IH}. To access semaphore, $\overline{CE}$ = V_{IH} or $\overline{UB}$ & $\overline{LB}$ = V_{IH}, and $\overline{SEM}$ = V_{IL}. t_{EW} must be met for either condition.

Timing Waveform of Semaphore Read after Write Timing, Either Side(1)

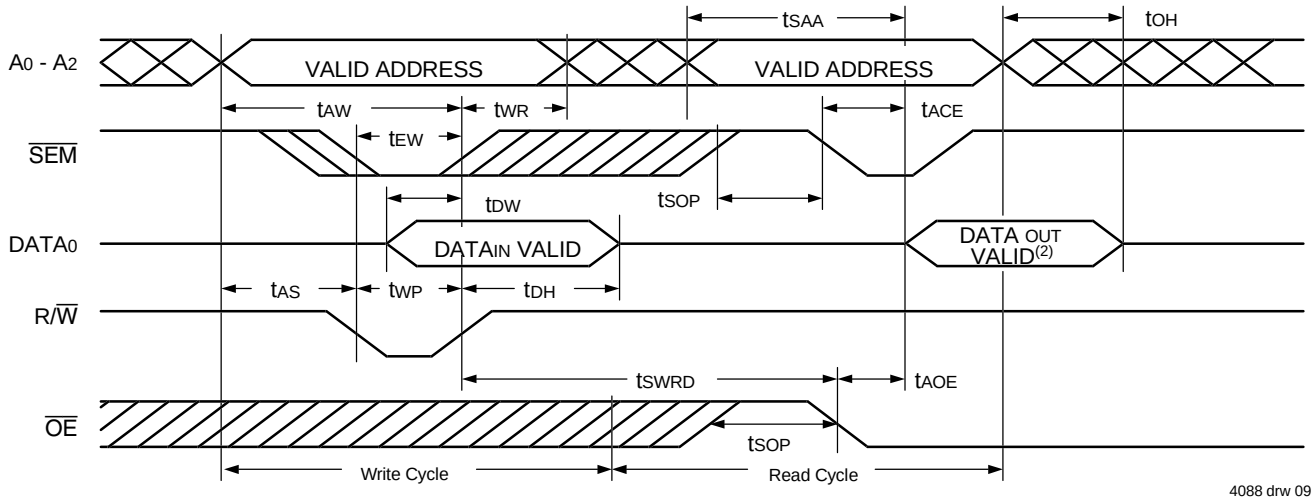

NOTE:
1. $\overline{CE}$ = VIH or $\overline{UB}$ & $\overline{LB}$ = VIH for the duration of the above timing (both write and read cycle).
2. "DATAOUT VALID' represents all I/Os (I/O0-I/O17) equal to the semaphore value.

Timing Waveform of Semaphore Write Contention(1,3,4)

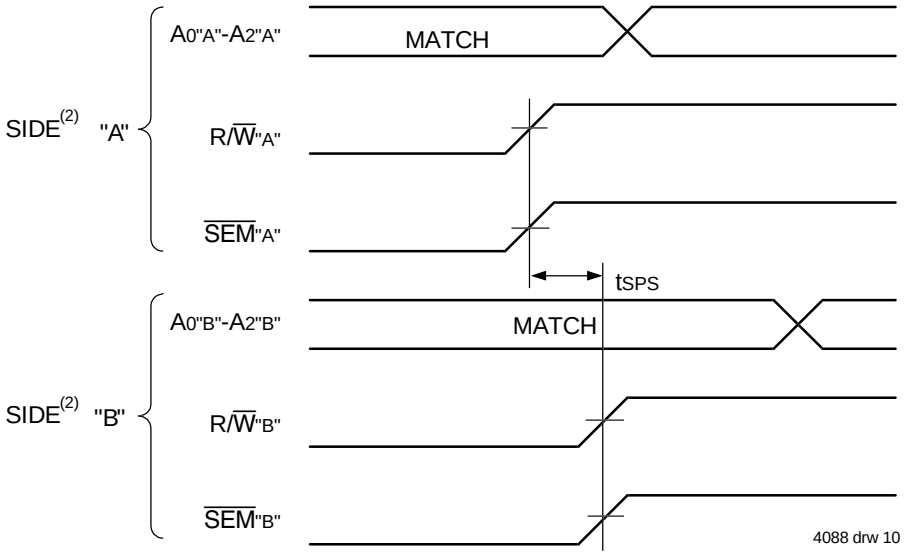

NOTES:
1. DOR = DOL = VIL, $\overline{CE}_R$ = $\overline{CE}_L$ = VIH, or both $\overline{UB}$ & $\overline{LB}$ = VIH.
2. All timing is the same for left and right port. Port "A" may be either left or right port. Port "B" is the opposite from port "A".
3. This parameter is measured from R/$\overline{W}$"A" or $\overline{SEM}$"A" going HIGH to R/$\overline{W}$"B" or $\overline{SEM}$"B" going HIGH.
4. If tSPS is not satisfied, there is no guarantee which side will obtain the semaphore flag.

AC Electrical Characteristics Over the Operating Temperature and Supply Voltage Range[6,7]

Symbol	Parameter	7035X15 Com'l Only		7035X20 Com'l Only		Unit
		Min.	Max.	Min.	Max.	
$\overline{BUSY}$ TIMING (M/$\overline{S}$=VIH)						
t_{BAA}	$\overline{BUSY}$ Access Time from Address Match	—	15	—	20	ns
t_{BDA}	$\overline{BUSY}$ Disable Time from Address Not Matched	—	15	—	20	ns
t_{BAC}	$\overline{BUSY}$ Access Time from Chip Enable Low	—	15	—	20	ns
t_{BDC}	$\overline{BUSY}$ Access Time from Chip Enable High	—	15	—	17	ns
t_{APS}	Arbitration Priority Set-up Time[2]	5	—	5	—	ns
t_{BDD}	$\overline{BUSY}$ Disable to Valid Data[3]	—	18	—	30	ns
t_{WH}	Write Hold After $\overline{BUSY}$[5]	12	—	15	—	ns
$\overline{BUSY}$ TIMING (M/$\overline{S}$=VIL)						
t_{WB}	$\overline{BUSY}$ Input to Write[4]	0	—	0	—	ns
t_{WH}	Write Hold After $\overline{BUSY}$[5]	12	—	15	—	ns
PORT-TO-PORT DELAY TIMING						
t_{WDD}	Write Pulse to Data Delay[1]	—	30	—	45	ns
t_{DDD}	Write Data Valid to Read Data Delay[1]	—	25	—	30	ns

4088 tbl 14

NOTES:
1. Port-to-port delay through RAM cells from writing port to reading port, refer to "Timing Waveform of Read With $\overline{BUSY}$ (M/$\overline{S}$ = VIH)" or "Timing Waveform of Write with Port-To-Port Delay (M/$\overline{S}$ = VIH)".
2. To ensure that the earlier of the two ports wins.
3. t_{BDD} is a calculated parameter and is the greater of 0ns, $t_{WDD} - t_{WP}$ (actual) or $t_{DDD} - t_{DW}$ (actual).
4. To ensure that the write cycle is inhibited on Port "B" during contention with Port "A".
5. To ensure that a write cycle is completed on Port "B" after contention with Port "A".
6. 'X' in part numbers indicates power rating (S or L).
7. Industrial temperature: for specific speeds, packages and powers contact your sales office.

Timing Waveform of Write Port-to-Port Read and $\overline{BUSY}$(2,5) (M/$\overline{S}$ = VIH)(4)

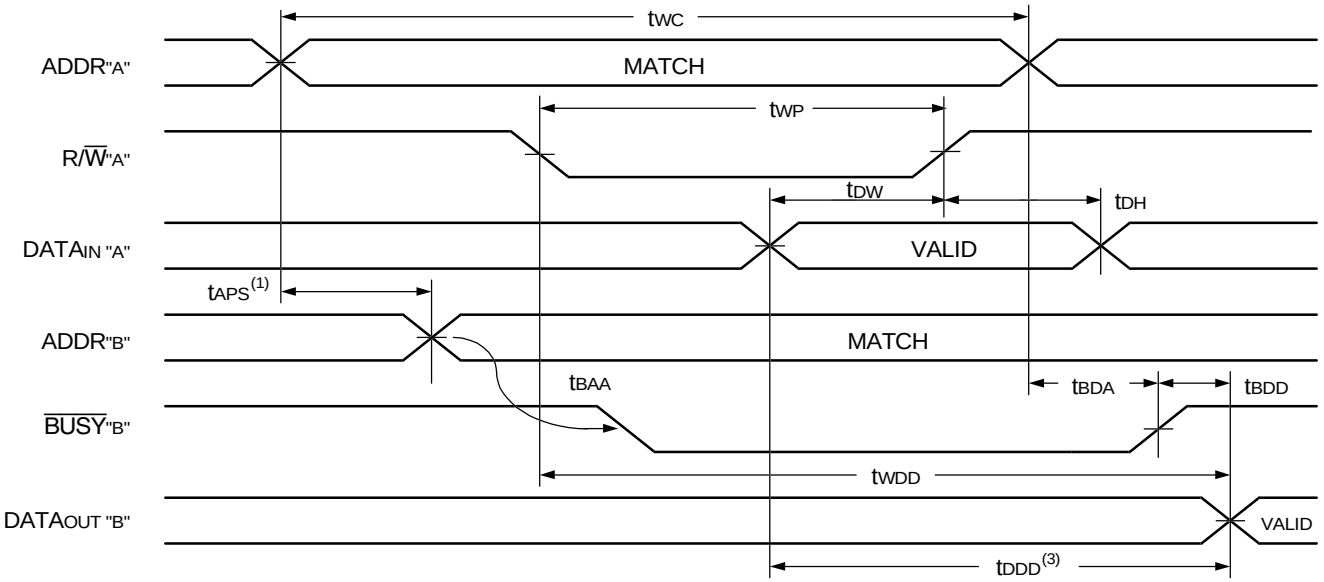

4088 drw 11

NOTES:
1. To ensure that the earlier of the two ports wins. tAPS is ignored for M/$\overline{S}$ = VIL (slave).
2. $\overline{CE}_L$ = $\overline{CE}_R$ = VIL.
3. $\overline{OE}$ = VIL for the reading port.
4. If M/$\overline{S}$ = VIL (SLAVE) then $\overline{BUSY}$ is an input $\overline{BUSY}_{"A"}$ = VIL and $\overline{BUSY}_{"B"}$ = "don't care."
5. All timing is the same for left and right ports. Port "A" may be either the left of right port. Port "B" is the opposite port from Port "A".

Timing Waveform of Write with $\overline{BUSY}$

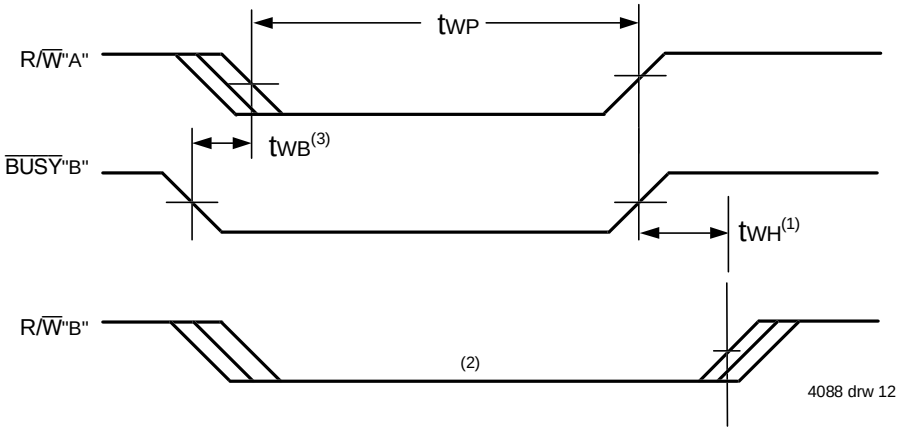

4088 drw 12

NOTES:
1. tWH must be met for both $\overline{BUSY}$ input (slave) output master.
2. $\overline{BUSY}$ is asserted on port "B" Blocking R/$\overline{W}_{"B"}$, until $\overline{BUSY}_{"B"}$ goes HIGH
3. tWB is only for the 'Slave' Version.

Waveform of $\overline{BUSY}$ Arbitration Controlled by $\overline{CE}$ Timing(1) (M/$\overline{S}$ = VIH)

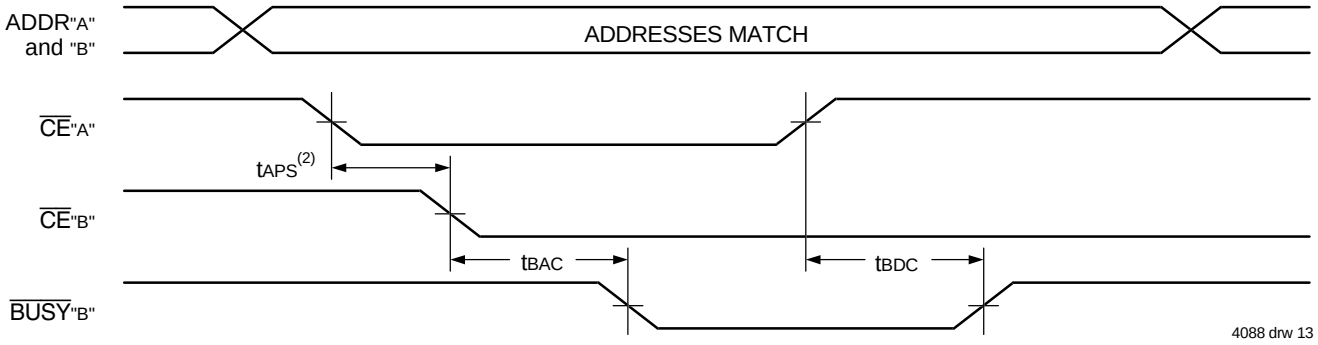

4088 drw 13

Waveform of $\overline{BUSY}$ Arbitration Cycle Controlled by Address Match Timing(1) (M/$\overline{S}$ = VIH)

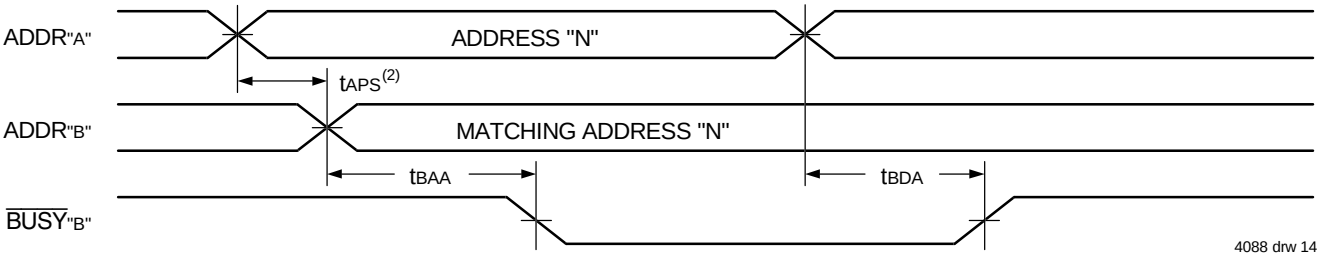

4088 drw 14

NOTES:
1. All timing is the same for left and right ports. Port "A" may be either the left or right port. Port "B" is the port opposite from "A".
2. If tAPS is not satisfied, the $\overline{BUSY}$ signal will be asserted on one side or another but there is no guarantee on which side $\overline{BUSY}$ will be asserted.

AC Electrical Characteristics Over the Operating Temperature and Supply VoltageRange(1,2)

Symbol	Parameter	7035X15 Com'l Only		7035X20 Com'l Only		Unit
		Min.	Max.	Min.	Max.	
INTERRUPT TIMING						
tAS	Address Set-up Time	0	—	0	—	ns
tWR	Write Recovery Time	0	—	0	—	ns
tINS	Interrupt Set Time	—	15	—	20	ns
tINR	Interrupt Reset Time	—	15	—	20	ns

4088 tbl 15

NOTES:
1. 'X' in part numbers indicates power rating (S or L).
2. Industrial temperature: for specific speeds, packages and powers contact your sales office.

Waveform of Interrupt Timing(1)

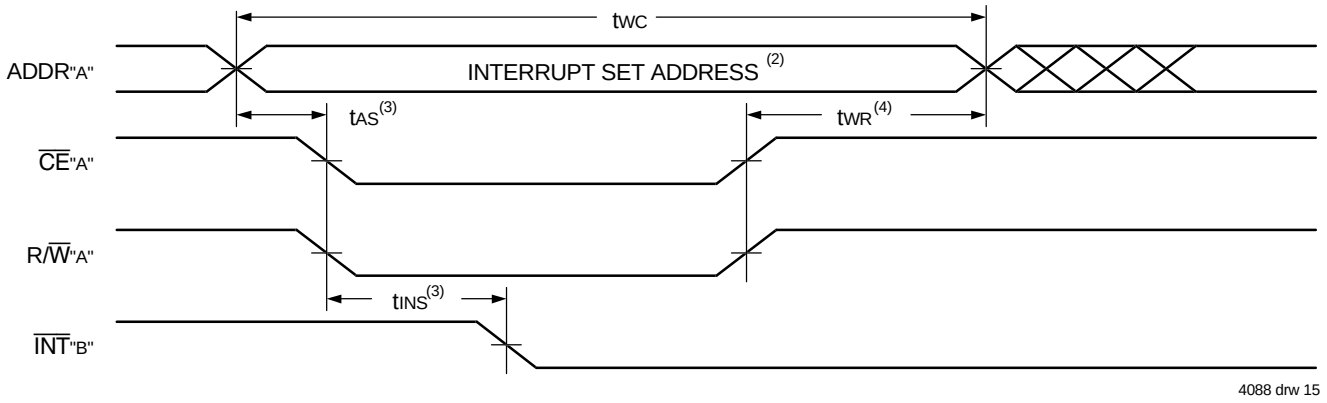

4088 drw 15

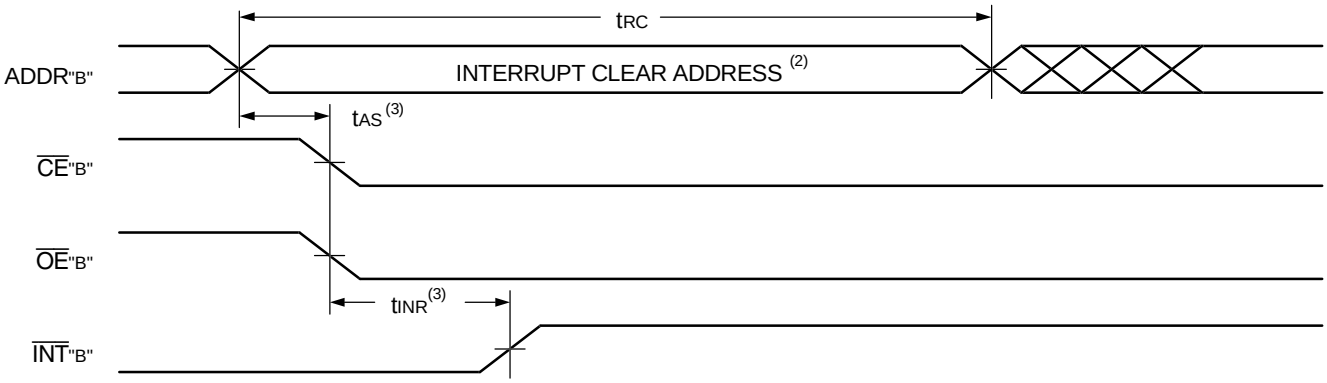

4088 drw 16

NOTES:
1. All timing is the same for left and right ports. Port "A" may be either the left or right port. Port "B" is the port opposite from "A".
2. See Interrupt Flag Truth Table III.
3. Timing depends on which enable signal ($\overline{CE}$ or R/$\overline{W}$) is asserted last.
4. Timing depends on which enable signal ($\overline{CE}$ or R/$\overline{W}$) is de-asserted first.

Truth Table III — Interrupt Flag(1,2)

Left Port					Right Port					
R/$\overline{W}_L$	$\overline{CE}_L$	$\overline{OE}_L$	A_{0L}-A_{12L}	$\overline{INT}_L$	R/$\overline{W}_R$	$\overline{CE}_R$	$\overline{OE}_R$	A_{0R}-A_{12R}	$\overline{INT}_R$	Function
L	L	X	1FFF	X	X	X	X	X	L(3)	Set Right $\overline{INT}_R$ Flag
X	X	X	X	X	X	L	L	1FFF	H(4)	Reset Right $\overline{INT}_R$ Flag
X	X	X	X	L(3)	L	L	X	1FFE	X	Set Left $\overline{INT}_L$ Flag
X	L	L	1FFE	H(2)	X	X	X	X	X	Reset Left $\overline{INT}_L$ Flag

4088 tbl 16

NOTES:
1. Assumes $\overline{BUSY}_L$ = $\overline{BUSY}_R$ = V_{IH}.
2. If $\overline{BUSY}_L$ = V_{IL}, then no change.
3. If $\overline{BUSY}_R$ = V_{IL}, then no change.
4. $\overline{INT}_R$ and $\overline{INT}_L$ must be initialized at power-up.

Truth Table IV — Address $\overline{BUSY}$ Arbitration

Inputs			Outputs		
$\overline{CE}_L$	$\overline{CE}_R$	A_{OL}-A_{12L} A_{OR}-A_{12R}	$\overline{BUSY}_L$(1)	$\overline{BUSY}_R$(1)	Function
X	X	NO MATCH	H	H	Normal
H	X	MATCH	H	H	Normal
X	H	MATCH	H	H	Normal
L	L	MATCH	(2)	(2)	Write Inhibit(3)

4088 tbl 17

NOTES:
1. Pins $\overline{BUSY}_L$ and $\overline{BUSY}_R$ are both outputs when the part is configured as a master. $\overline{BUSY}$ are inputs when configured as a slave. $\overline{BUSY}$x outputs on the IDT7035 are push pull, not open drain outputs. On slaves the $\overline{BUSY}$ asserted internally inhibits write.
2. "L" if the inputs to the opposite port were stable prior to the address and enable inputs of this port. "H" if the inputs to the opposite port became stable after the address and enable inputs of this port. If t_{APS} is not met, either $\overline{BUSY}_L$ or $\overline{BUSY}_R$ = LOW will result. $\overline{BUSY}_L$ and $\overline{BUSY}_R$ outputs cannot be LOW simultaneously.
3. Writes to the left port are internally ignored when $\overline{BUSY}_L$ outputs are driving LOW regardless of actual logic level on the pin. Writes to the right port are internally ignored when $\overline{BUSY}_R$ outputs are driving LOW regardless of actual logic level on the pin.

Truth Table V — Example of Semaphore Procurement Sequence(1,2,3)

Functions	D_0 - D_{17} Left	D_0 - D_{17} Right	Status
No Action	1	1	Semaphore free
Left Port Writes "0" to Semaphore	0	1	Left port has semaphore token
Right Port Writes "0" to Semaphore	0	1	No change. Right side has no write access to semaphore
Left Port Writes "1" to Semaphore	1	0	Right port obtains semaphore token
Left Port Writes "0" to Semaphore	1	0	No change. Left port has no write access to semaphore
Right Port Writes "1" to Semaphore	0	1	Left port obtains semaphore token
Left Port Writes "1" to Semaphore	1	1	Semaphore free
Right Port Writes "0" to Semaphore	1	0	Right port has semaphore token
Right Port Writes "1" to Semaphore	1	1	Semaphore free
Left Port Writes "0" to Semaphore	0	1	Left port has semaphore token
Left Port Writes "1" to Semaphore	1	1	Semaphore free

4088 tbl 18

NOTES:
1. This table denotes a sequence of events for only one of the eight semaphores on the IDT7035.
2. There are eight semaphore flags written to via I/O_0 and read from all I/0's. These eight semaphores are addressed by A_0 - A_2.
3. $\overline{CE}$ = V_{IH}, $\overline{SEM}$ = V_{IL} to access the semaphores. Refer to the Semaphore Read/Write Control Truth Table.

Functional Description

The IDT7035 provides two ports with separate control, address and I/O pins that permit independent access for reads or writes to any location in memory. The IDT7035 has an automatic power down feature controlled by $\overline{CE}$. The $\overline{CE}$ controls on-chip power down circuitry that permits the respective port to go into a standby mode when not selected ($\overline{CE}$ HIGH). When a port is enabled, access to the entire memory array is permitted.

Interrupts

If the user chooses the interrupt function, a memory location (mail box or message center) is assigned to each port. The left port interrupt flag ($\overline{INT}_L$) is asserted when the right port writes to memory location 1FFE (HEX), where a write is defined as the $\overline{CE}_R$ = R/$\overline{W}_R$ = V_{IL} per Truth Table III. The left port clears the interrupt by an address location 1FFE access when $\overline{CE}_L$ = $\overline{OE}_L$ = V_{IL}, R/$\overline{W}_L$ is a "don't care". Likewise, the right port interrupt flag ($\overline{INT}_R$) is asserted when the left port writes to memory location 1FFF (HEX) and to clear the interrupt flag ($\overline{INT}_R$), the right port must access the memory location 1FFF, The message (18 bits) at 1FFE or 1FFF is user-defined, since it is an addressable SRAM location. If the interrupt function is not used, address locations 1FFE and 1FFF are not used as mail boxes, but as part of the random access memory. Refer to Truth Table III for the interrupt operation.

Busy Logic

Busy Logic provides a hardware indication that both ports of the RAM have accessed the same location at the same time. It also allows one of the two accesses to proceed and signals the other side that the RAM is "busy". The $\overline{BUSY}$ pin can then be used to stall the access until the operation on the other side is completed. If a write operation has been attempted from the side that receives a $\overline{BUSY}$ indication, the write signal is gated internally to prevent the write from proceeding.

The use of $\overline{BUSY}$ logic is not required or desirable for all applications. In some cases it may be useful to logically OR the $\overline{BUSY}$ outputs together and use any $\overline{BUSY}$ indication as an interrupt source to flag the event of an illegal or illogical operation. If the write inhibit function of $\overline{BUSY}$ logic is not desirable, the $\overline{BUSY}$ logic can be disabled by placing the part in slave mode with the M/$\overline{S}$ pin. Once in slave mode the $\overline{BUSY}$ pin operates solely as a write inhibit input pin. Normal operation can be programmed by tying the $\overline{BUSY}$ pins HIGH. If desired, unintended write operations can be prevented to a port by tying the $\overline{BUSY}$ pin for that port LOW.

The $\overline{BUSY}$ outputs on the IDT7035 RAM in master mode, are push-pull type outputs and do not require pull up resistors to operate. If these RAMs are being expanded in depth, then the $\overline{BUSY}$ indication for the resulting array requires the use of an external AND gate.

Width Expansion with $\overline{BUSY}$ Logic Master/Slave Arrays

When expanding an IDT7035 RAM array in width while using $\overline{BUSY}$ logic, one master part is used to decide which side of the RAM array will receive a $\overline{BUSY}$ indication, and to output that indication. Any number of slaves to be addressed in the same address range as the master, use the $\overline{BUSY}$ signal as a write inhibit signal. Thus on the IDT7035 RAM the $\overline{BUSY}$ pin is an output if the part is used as a master (M/$\overline{S}$ = V_{IH}), and the $\overline{BUSY}$ pin is an input if the part used as a slave (M/$\overline{S}$ = V_{IL}) as shown in Figure 3.

If two or more master parts were used when expanding in width, a split decision could result with one master indicating $\overline{BUSY}$ on one side of the array and another master indicating $\overline{BUSY}$ on one other side of the array. This would inhibit the write operations from one port for part of a word and inhibit the write operations from the other port for the other part of the word.

The $\overline{BUSY}$ arbitration, on a master, is based on the chip enable and address signals only. It ignores whether an access is a read or write. In a master/slave array, both address and chip enable must be valid long enough for a $\overline{BUSY}$ flag to be output from the master before the actual write pulse can be initiated with either the R/$\overline{W}$ signal or the byte enables. Failure to observe this timing can result in a glitched internal write inhibit signal and corrupted data in the slave.

Semaphores

The IDT7035 is an extremely fast Dual-Port 8K x 18 CMOS Static RAM with an additional 8 address locations dedicated to binary semaphore flags. These flags allow either processor on the left or right side of the Dual-Port RAM to claim a privilege over the other processor for functions defined by the system designer's software. As an example, the semaphore can be used by one processor to inhibit the other from accessing a portion of the Dual-Port RAM or any other shared resource.

The Dual-Port RAM features a fast access time, and both ports are completely independent of each other. This means that the activity on the left port in no way slows the access time of the right port. Both ports are identical in function to standard CMOS Static RAM and can be read from, or written to, at the same time with the only possible conflict arising from the simultaneous writing of, or a simultaneous READ/WRITE of, a non-semaphore location. Semaphores are protected against such ambiguous situations and may be used by the system program to avoid any conflicts in the non-semaphore portion of the Dual-Port RAM. These devices have an automatic power-down feature controlled by $\overline{CE}$, the Dual-Port RAM enable, and $\overline{SEM}$, the semaphore enable. The $\overline{CE}$ and $\overline{SEM}$ pins control on-chip power down circuitry that permits the respective port to go into standby mode when not selected. This is the condition which is shown in Truth Table I where $\overline{CE}$ and $\overline{SEM}$ = V_{IH}.

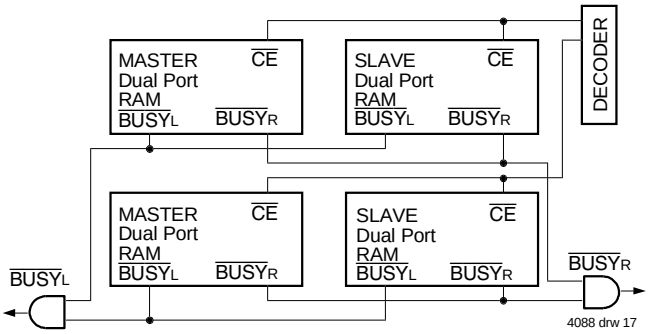

Figure 3. Busy and chip enable routing for both width and depth expansion with IDT7035 RAMs.

Systems which can best use the IDT7035 contain multiple processors or controllers and are typically very high-speed systems which are software controlled or software intensive. These systems can benefit from a performance increase offered by the IDT7035's hardware semaphores, which provide a lockout mechanism without requiring complex programming.

Software handshaking between processors offers the maximum in system flexibility by permitting shared resources to be allocated in varying configurations. The IDT7035 does not use its semaphore flags to control any resources through hardware, thus allowing the system designer total flexibility in system architecture.

An advantage of using semaphores rather than the more common methods of hardware arbitration is that wait states are never incurred in either processor. This can prove to be a major advantage in very high-speed systems.

How the Semaphore Flags Work

The semaphore logic is a set of eight latches which are independent of the Dual-Port RAM. These latches can be used to pass a flag, or token, from one port to the other to indicate that a shared resource is in use. The semaphores provide a hardware assist for a use assignment method called "Token Passing Allocation." In this method, the state of a semaphore latch is used as a token indicating that shared resource is in use. If the left processor wants to use this resource, it requests the token by setting the latch. This processor then verifies its success in setting the latch by reading it. If it was successful, it proceeds to assume control over the shared resource. If it was not successful in setting the latch, it determines that the right side processor has set the latch first, has the token and is using the

shared resource. The left processor can then either repeatedly request that semaphore's status or remove its request for that semaphore to perform another task and occasionally attempt again to gain control of the token via the set and test sequence. Once the right side has relinquished the token, the left side should succeed in gaining control.

The semaphore flags are active LOW. A token is requested by writing a zero into a semaphore latch and is released when the same side writes a one to that latch.

The eight semaphore flags reside within the IDT7035 in a separate memory space from the Dual-Port RAM. This address space is accessed by placing a LOW input on the $\overline{SEM}$ pin (which acts as a chip select for the semaphore flags) and using the other control pins (Address, $\overline{OE}$, and R/$\overline{W}$) as they would be used in accessing a standard Static RAM. Each of the flags has a unique address which can be accessed by either side through address pins $A_0 – A_2$. When accessing the semaphores, none of the other address pins has any effect.

When writing to a semaphore, only data pin D_0 is used. If a low level is written into an unused semaphore location, that flag will be set to a zero on that side and a one on the other side (see Truth Table V). That semaphore can now only be modified by the side showing the zero. When a one is written into the same location from the same side, the flag will be set to a one for both sides (unless a semaphore request from the other side is pending) and then can be written to by both sides. The fact that the side which is able to write a zero into a semaphore subsequently locks out writes from the other side is what makes semaphore flags useful in interprocessor communications. (A thorough discussion on the use of this feature follows shortly.) A zero written into the same location from the other side will be stored in the semaphore request latch for that side until the semaphore is freed by the first side.

When a semaphore flag is read, its value is spread into all data bits so that a flag that is a one reads as a one in all data bits and a flag containing a zero reads as all zeros. The read value is latched into one side's output register when that side's semaphore select ($\overline{SEM}$) and output enable ($\overline{OE}$) signals go active. This serves to disallow the semaphore from changing state in the middle of a read cycle due to a write cycle from the other side. Because of this latch, a repeated read of a semaphore in a test loop must cause either signal ($\overline{SEM}$ or $\overline{OE}$) to go inactive or the output will never change.

A sequence WRITE/READ must be used by the semaphore in order to guarantee that no system level contention will occur. A processor requests access to shared resources by attempting to write a zero into a semaphore location. If the semaphore is already in use, the semaphore request latch will contain a zero, yet the semaphore flag will appear as one, a fact which the processor will verify by the subsequent read (see Truth Table V). As an example, assume a processor writes a zero to the left port at a free semaphore location. On a subsequent read, the processor will verify that it has written successfully to that location and will assume control over the resource in question. Meanwhile, if a processor on the right side attempts to write a zero to the same semaphore flag it will fail, as will be verified by the fact that a one will be read from that semaphore on the right side during subsequent read. Had a sequence of READ/WRITE been used instead, system contention problems could have occurred during the gap between the read and write cycles.

It is important to note that a failed semaphore request must be followed by either repeated reads or by writing a one into the same location. The reason for this is easily understood by looking at the simple logic diagram of the semaphore flag in Figure 4. Two semaphore request latches feed into a semaphore flag. Whichever latch is first to present a zero to the semaphore flag will force its side of the semaphore flag LOW and the other side HIGH. This condition will continue until a one is written to the same semaphore request latch. Should the other side's semaphore request latch have been written to a zero in the meantime, the semaphore flag will flip over to the other side as soon as a one is written into the first side's request latch. The second side's flag will now stay LOW until its semaphore request latch is written to a one. From this it is easy to understand that, if a semaphore is requested and the processor which requested it no longer needs the resource, the entire system can hang up until a one is written into that semaphore request latch.

The critical case of semaphore timing is when both sides request a single token by attempting to write a zero into it at the same time. The semaphore logic is specially designed to resolve this problem. If simultaneous requests are made, the logic guarantees that only one side receives the token. If one side is earlier than the other in making the request, the first side to make the request will receive the token. If both requests arrive at the same time, the assignment will be arbitrarily made to one port or the other.

One caution that should be noted when using semaphores is that semaphores alone do not guarantee that access to a resource is secure. As with any powerful programming technique, if semaphores are misused or misinterpreted, a software error can easily happen.

Initialization of the semaphores is not automatic and must be handled via the initialization program at power-up. Since any semaphore request flag which contains a zero must be reset to a one, all semaphores on both sides should have a one written into them at initialization from both sides to assure that they will be free when needed.

Using Semaphores—Some Examples

Perhaps the simplest application of semaphores is their application as resource markers for the IDT7035's Dual-Port RAM. Say the 8K x 18 RAM was to be divided into two 4K x 18 blocks which were to be dedicated at any one time to servicing either the left or right port. Semaphore 0 could be used to indicate the side which would control the lower section of memory, and Semaphore 1 could be defined as the indicator for the upper section of memory.

To take a resource, in this example the lower 4K of Dual-Port RAM, the processor on the left port could write and then read a zero in to Semaphore 0. If this task was successfully completed (a zero was read back rather than a one), the left processor would assume control of the lower 4K. Meanwhile the right processor was attempting to gain control of the resource after the left processor, it would read back a one in response to the zero it had attempted to write into Semaphore 0. At this point, the software could choose to try and gain control of the second 4K section by writing, then reading a zero into Semaphore 1. If it succeeded in gaining control, it would lock out the left side.

Once the left side was finished with its task, it would write a one to Semaphore 0 and may then try to gain access to Semaphore 1. If Semaphore 1 was still occupied by the right side, the left side could undo its semaphore request and perform other tasks until it was able to write, then read a zero into Semaphore 1. If the right processor performs a similar task with Semaphore 0, this protocol would allow the two processors to swap 4K blocks of Dual-Port RAM with each other.

The blocks do not have to be any particular size and can even be variable, depending upon the complexity of the software using the semaphore flags. All eight semaphores could be used to divide the Dual-Port RAM or other shared resources into eight parts. Semaphores can even be assigned different meanings on different sides rather than being given a common meaning as was shown in the example above.

Semaphores are a useful form of arbitration in systems like disk interfaces where the CPU must be locked out of a section of memory during a transfer and the I/O device cannot tolerate any wait states. With the use of semaphores, once the two devices has determined which memory area was "off-limits" to the CPU, both the CPU and the I/O devices could access their assigned portions of memory continuously without any wait states.

Semaphores are also useful in applications where no memory "WAIT" state is available on one or both sides. Once a semaphore handshake has been performed, both processors can access their assigned RAM segments at full speed.

Another application is in the area of complex data structures. In this case, block arbitration is very important. For this application one processor may be responsible for building and updating a data structure. The other processor then reads and interprets that data structure. If the interpreting processor reads an incomplete data structure, a major error condition may exist. Therefore, some sort of arbitration must be used between the two different processors. The building processor arbitrates for the block, locks it and then is able to go in and update the data structure. When the update is completed, the data structure block is released. This allows the interpreting processor to come back and read the complete data structure, thereby guaranteeing a consistent data structure.

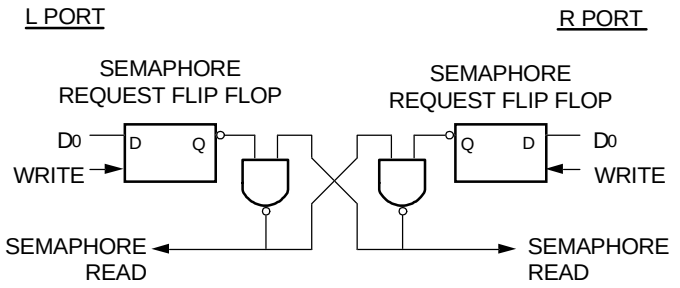

Figure 4. IDT7035 Semaphore Logic

Ordering Information

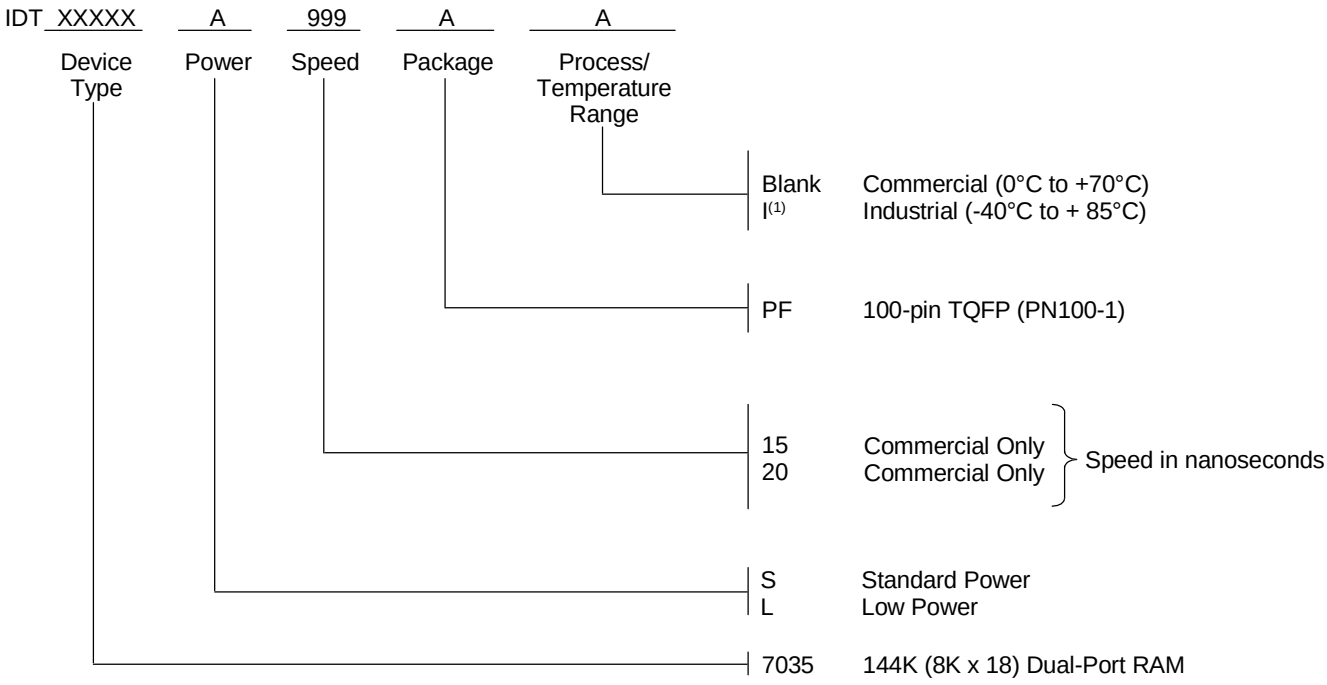

4088 drw 19

NOTE:
1. Industrial temperature range is available.
   For specific speeds, packages and powers contact your sales office.

Datasheet Document History

1/18/99:	Initiated datasheet document history
	Converted to new format
	Cosmetic typographical corrections
	Added additional notes to pin configurations
5/19/99:	Page 9 Fixed typographical error
6/4/99:	Changed drawing format
	Page 1 Corrected DSC number
9/1/99:	Removed Preliminary

CORPORATE HEADQUARTERS
2975 Stender Way
Santa Clara, CA 95054

for SALES:
800-345-7015 or 408-727-6116
fax: 408-492-8674
www.idt.com

for Tech Support:
831-754-4613
DualPortHelp@idt.com

The IDT logo is a registered trademark of Integrated Device Technology, Inc.