PIC18FXX8
Data Sheet

28/40-Pin High Performance, Enhanced FLASH Microcontrollers with CAN

© 2003 Microchip Technology Inc.

Note the following details of the code protection feature on Microchip devices:

- Microchip products meet the specification contained in their particular Microchip Data Sheet.
- Microchip believes that its family of products is one of the most secure families of its kind on the market today, when used in the intended manner and under normal conditions.
- There are dishonest and possibly illegal methods used to breach the code protection feature. All of these methods, to our knowledge, require using the Microchip products in a manner outside the operating specifications contained in Microchip's Data Sheets. Most likely, the person doing so is engaged in theft of intellectual property.
- Microchip is willing to work with the customer who is concerned about the integrity of their code.
- Neither Microchip nor any other semiconductor manufacturer can guarantee the security of their code. Code protection does not mean that we are guaranteeing the product as “unbreakable.”

Code protection is constantly evolving. We at Microchip are committed to continuously improving the code protection features of our products. Attempts to break microchip’s code protection feature may be a violation of the Digital Millennium Copyright Act. If such acts allow unauthorized access to your software or other copyrighted work, you may have a right to sue for relief under that Act.

Information contained in this publication regarding device applications and the like is intended through suggestion only and may be superseded by updates. It is your responsibility to ensure that your application meets with your specifications. No representation or warranty is given and no liability is assumed by Microchip Technology Incorporated with respect to the accuracy or use of such information, or infringement of patents or other intellectual property rights arising from such use or otherwise. Use of Microchip’s products as critical components in life support systems is not authorized except with express written approval by Microchip. No licenses are conveyed, implicitly or otherwise, under any intellectual property rights.

Trademarks

The Microchip name and logo, the Microchip logo, KEELOQ, MPLAB, PIC, PICmicro, PICSTART, PRO MATE and PowerSmart are registered trademarks of Microchip Technology Incorporated in the U.S.A. and other countries.

FilterLab, microID, MXDEV, MXLAB, PICMASTER, SEEVAL and The Embedded Control Solutions Company are registered trademarks of Microchip Technology Incorporated in the U.S.A.

Accuron, dsPIC, dsPICDEM.net, ECONOMONITOR, FanSense, FlexROM, fuzzyLAB, In-Circuit Serial Programming, ICSP, ICEPIC, microPort, Migratable Memory, MPASM, MPLIB, MPLINK, MPSIM, PICC, PICkit, PICDEM, PICDEM.net, PowerCal, PowerInfo, PowerTool, rfPIC, Select Mode, SmartSensor, SmartShunt, SmartTel and Total Endurance are trademarks of Microchip Technology Incorporated in the U.S.A. and other countries.

Serialized Quick Turn Programming (SQTP) is a service mark of Microchip Technology Incorporated in the U.S.A.

All other trademarks mentioned herein are property of their respective companies.

© 2003, Microchip Technology Incorporated, Printed in the U.S.A., All Rights Reserved.

Printed on recycled paper.

DNV Certification, Inc. USA — ANSI-RAB QMS ACCREDITED — DNV — DNV MSC The Netherlands Accredited by the RvA — ISO 9001 / QS-9000 REGISTERED FIRM

Microchip received QS-9000 quality system certification for its worldwide headquarters, design and wafer fabrication facilities in Chandler and Tempe, Arizona in July 1999 and Mountain View, California in March 2002. The Company’s quality system processes and procedures are QS-9000 compliant for its PICmicro® 8-bit MCUs, KEELOQ® code hopping devices, Serial EEPROMs, microperipherals, non-volatile memory and analog products. In addition, Microchip’s quality system for the design and manufacture of development systems is ISO 9001 certified.

© 2003 Microchip Technology Inc.

PIC18FXX8

28/40-Pin High Performance, Enhanced FLASH Microcontrollers with CAN

High Performance RISC CPU:

- Linear program memory addressing up to 2 Mbytes
- Linear data memory addressing to 4 Kbytes
- Up to 10 MIPs operation
- DC - 40 MHz clock input
- 4 MHz - 10 MHz osc./clock input with PLL active
- 16-bit wide instructions, 8-bit wide data path
- Priority levels for interrupts
- 8 x 8 Single Cycle Hardware Multiplier

Peripheral Features:

- High current sink/source 25 mA/25 mA
- Three external interrupt pins
- Timer0 module: 8-bit/16-bit timer/counter with 8-bit programmable prescaler
- Timer1 module: 16-bit timer/counter
- Timer2 module: 8-bit timer/counter with 8-bit period register (time-base for PWM)
- Timer3 module: 16-bit timer/counter
- Secondary oscillator clock option - Timer1/Timer3
- Capture/Compare/PWM (CCP) modules CCP pins can be configured as:
  - Capture input: 16-bit, max resolution 6.25 ns
  - Compare: 16-bit, max resolution 100 ns (TCY)
  - PWM output: PWM resolution is 1- to 10-bit
    Max. PWM freq. @: 8-bit resolution = 156 kHz
    10-bit resolution = 39 kHz
- Enhanced CCP module which has all the features of the standard CCP module, but also has the following features for advanced motor control:
  - 1, 2, or 4 PWM outputs
  - Selectable PWM polarity
  - Programmable PWM dead-time
- Master Synchronous Serial Port (MSSP) with two modes of operation:
  - 3-wire SPI™ (Supports all 4 SPI modes)
  - I^2C™ Master and Slave mode
- Addressable USART module:
  - Supports Interrupt on Address bit

Advanced Analog Features:

- 10-bit, up to 8-channel Analog-to-Digital Converter module (A/D) with:
  - Conversion available during SLEEP
  - Up to 8 channels available
- Analog Comparator Module:
  - Programmable input and output multiplexing
- Comparator Voltage Reference Module
- Programmable Low Voltage Detection (LVD) module
  - Supports interrupt on low voltage detection
- Programmable Brown-out Reset (BOR)

CAN bus Module Features:

- Complies with ISO CAN Conformance Test
- Message bit rates up to 1 Mbps
- Conforms to CAN 2.0B ACTIVE Spec with:
  - 29-bit Identifier Fields
  - 8-byte message length
  - 3 Transmit Message Buffers with prioritization
  - 2 Receive Message Buffers
  - 6 full 29-bit Acceptance Filters
  - Prioritization of Acceptance Filters
  - Multiple Receive Buffers for High Priority Messages to prevent loss due to overflow
  - Advanced Error Management Features

Special Microcontroller Features:

- Power-on Reset (POR), Power-up Timer (PWRT), and Oscillator Start-up Timer (OST)
- Watchdog Timer (WDT) with its own on-chip RC oscillator
- Programmable code protection
- Power saving SLEEP mode
- Selectable oscillator options, including:
  - 4X Phase Lock Loop (of primary oscillator)
  - Secondary Oscillator (32 kHz) clock input
- In-Circuit Serial Programming™ (ICSP™) via two pins

FLASH Technology:

- Low power, high speed Enhanced FLASH technology
- Fully static design
- Wide operating voltage range (2.0V to 5.5V)
- Industrial and Extended temperature ranges

© 2003 Microchip Technology Inc.

Device	Program Memory		Data Memory		I/O	10-bit A/D (ch)	Comparators	CCP/ ECCP (PWM)	MSSP		USART	Timers 8/16-bit
	FLASH (bytes)	# Single Word Instructions	SRAM (bytes)	EEPROM (bytes)					SPI	Master I^2C		
PIC18F248	16K	8192	768	256	22	5	—	1/0	Y	Y	Y	1/3
PIC18F258	32K	16384	1536	256	22	5	—	1/0	Y	Y	Y	1/3
PIC18F448	16K	8192	768	256	33	8	2	1/1	Y	Y	Y	1/3
PIC18F458	32K	16384	1536	256	33	8	2	1/1	Y	Y	Y	1/3

Pin Diagrams

PDIP

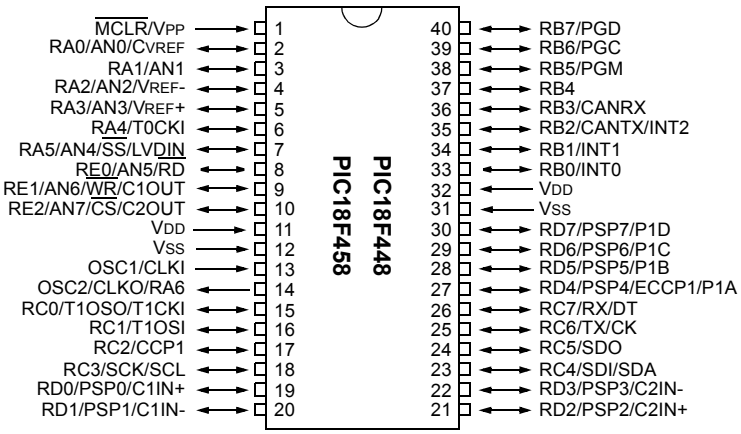

PLCC

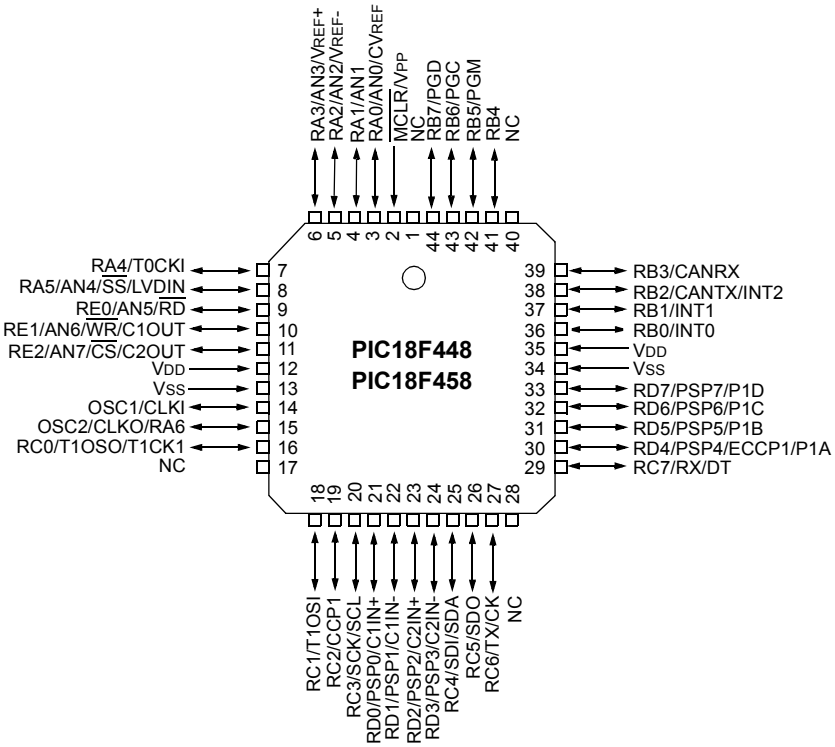

© 2003 Microchip Technology Inc.

Pin Diagrams (Continued)

TQFP

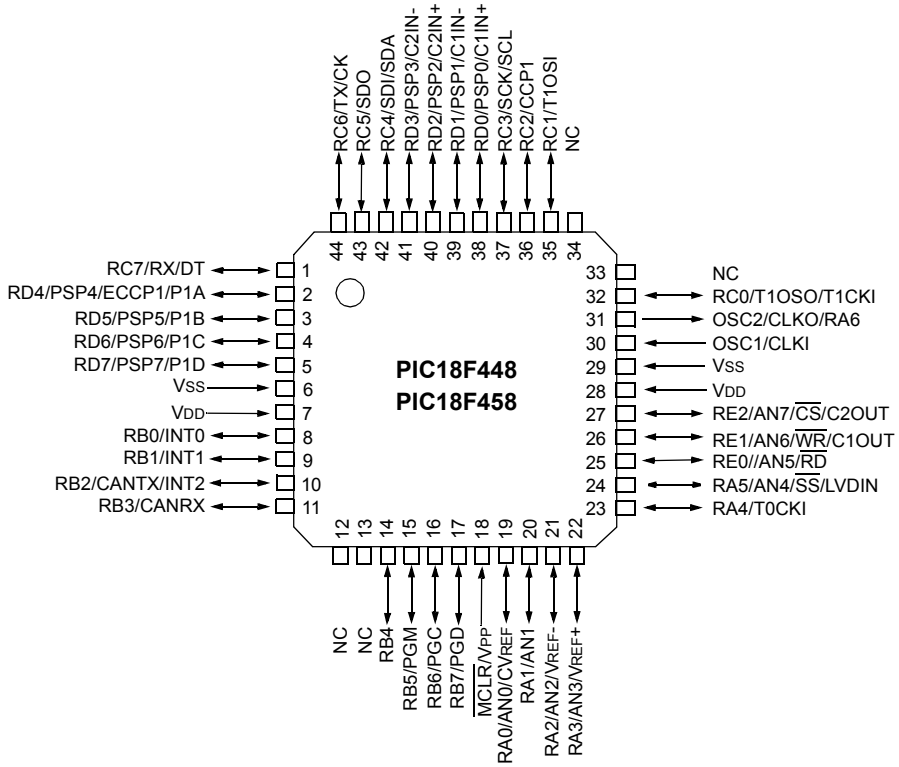

SPDIP, SOIC

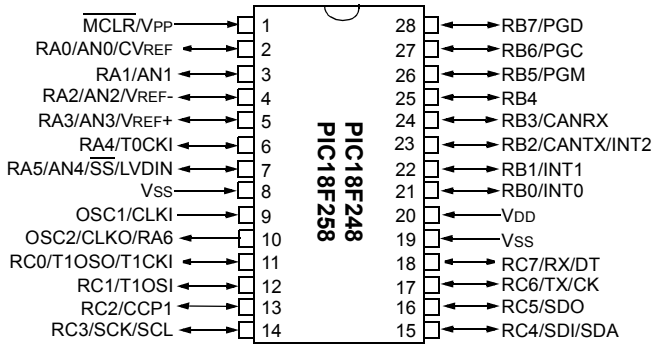

Table of Contents

1.0 Device Overview 7
2.0 Oscillator Configurations 17
3.0 Reset 25
4.0 Memory Organization 37
5.0 Data EEPROM Memory 59
6.0 FLASH Program Memory 65
7.0 8 X 8 Hardware Multiplier 75
8.0 Interrupts 77
9.0 I/O Ports 93
10.0 Parallel Slave Port 107
11.0 Timer0 Module 109
12.0 Timer1 Module 113
13.0 Timer2 Module 117
14.0 Timer3 Module 119
15.0 Capture/Compare/PWM (CCP) Modules 123
16.0 Enhanced Capture/Compare/PWM (ECCP) Module 131
17.0 Master Synchronous Serial Port (MSSP) Module 143
18.0 Addressable Universal Synchronous Asynchronous Receiver Transmitter (USART) 183
19.0 CAN Module 199
20.0 Compatible 10-bit Analog-to-Digital Converter (A/D) Module 241
21.0 Comparator Module 249
22.0 Comparator Voltage Reference Module 255
23.0 Low Voltage Detect 259
24.0 Special Features of the CPU 265
25.0 Instruction Set Summary 281
26.0 Development Support 323
27.0 Electrical Characteristics 329
28.0 DC and AC Characteristics Graphs and Tables 361
29.0 Packaging Information 377
Appendix A: Data Sheet Revision History 385
Appendix B: Device Differences 385
Appendix C: Device Migrations 386
Appendix D: Migrating from other PICmicro Devices 386
Index 387
On-Line Support 397
Systems Information and Upgrade Hot Line 397
Reader Response 398
PIC18FXX8 Product Identification System 399

© 2003 Microchip Technology Inc.

TO OUR VALUED CUSTOMERS

It is our intention to provide our valued customers with the best documentation possible to ensure successful use of your Microchip products. To this end, we will continue to improve our publications to better suit your needs. Our publications will be refined and enhanced as new volumes and updates are introduced.

If you have any questions or comments regarding this publication, please contact the Marketing Communications Department via E-mail at **docerrors@mail.microchip.com** or fax the **Reader Response Form** in the back of this data sheet to (480) 792-4150. We welcome your feedback.

Most Current Data Sheet

To obtain the most up-to-date version of this data sheet, please register at our Worldwide Web site at:

http://www.microchip.com

You can determine the version of a data sheet by examining its literature number found on the bottom outside corner of any page. The last character of the literature number is the version number, (e.g., DS30000A is version A of document DS30000).

Errata

An errata sheet, describing minor operational differences from the data sheet and recommended workarounds, may exist for current devices. As device/documentation issues become known to us, we will publish an errata sheet. The errata will specify the revision of silicon and revision of document to which it applies.

To determine if an errata sheet exists for a particular device, please check with one of the following:

- Microchip's Worldwide Web site; http://www.microchip.com
- Your local Microchip sales office (see last page)
- The Microchip Corporate Literature Center; U.S. FAX: (480) 792-7277

When contacting a sales office or the literature center, please specify which device, revision of silicon and data sheet (include literature number) you are using.

Customer Notification System

Register on our web site at **www.microchip.com/cn** to receive the most current information on all of our products.

NOTES:

© 2003 Microchip Technology Inc.

1.0 DEVICE OVERVIEW

This document contains device specific information for the following devices:

- PIC18F248
- PIC18F258
- PIC18F448
- PIC18F458

These devices are available in 28-pin, 40-pin and 44-pin packages. They are differentiated from each other in four ways:

1. PIC18FX58 devices have twice the FLASH program memory and data RAM of PIC18FX48 devices (32 Kbytes and 1536 bytes vs. 16 Kbytes and 768 bytes, respectively).
2. PIC18F2X8 devices implement 5 A/D channels, as opposed to 8 for PIC18F4X8 devices.
3. PIC18F2X8 devices implement 3 I/O ports, while PIC18F4X8 devices implement 5.
4. Only PIC18F4X8 devices implement the Enhanced CCP module, analog comparators and the Parallel Slave Port.

All other features for devices in the PIC18FXX8 family, including the serial communications modules, are identical. These are summarized in Table 1-1.

Block diagrams of the PIC18F2X8 and PIC18F4X8 devices are provided in Figure 1-1 and Figure 1-2, respectively. The pinouts for these device families are listed in Table 1-2.

TABLE 1-1: PIC18FXX8 DEVICE FEATURES

Features		PIC18F248	PIC18F258	PIC18F448	PIC18F458
Operating Frequency		DC - 40 MHz	DC - 40 MHz	DC - 40 MHz	DC - 40 MHz
Internal Program Memory	Bytes	16K	32K	16K	32K
	# of Single Word Instructions	8192	16384	8192	16384
Data Memory (Bytes)		768	1536	768	1536
Data EEPROM Memory (Bytes)		256	256	256	256
Interrupt Sources		17	17	21	21
I/O Ports		Ports A, B, C	Ports A, B, C	Ports A, B, C, D, E	Ports A, B, C, D, E
Timers		4	4	4	4
Capture/Compare/PWM Modules		1	1	1	1
Enhanced Capture/Compare/PWM Modules		—	—	1	1
Serial Communications		MSSP, CAN, Addressable USART	MSSP, CAN, Addressable USART	MSSP, CAN, Addressable USART	MSSP, CAN, Addressable USART
Parallel Communications (PSP)		No	No	Yes	Yes
10-bit Analog-to-Digital Converter		5 input channels	5 input channels	8 input channels	8 input channels
Analog Comparators		No	No	2	2
Analog Comparators V_{REF} Output		N/A	N/A	Yes	Yes
RESETS (and Delays)		POR, BOR, RESET Instruction, Stack Full, Stack Underflow (PWRT, OST)	POR, BOR, RESET Instruction, Stack Full, Stack Underflow (PWRT, OST)	POR, BOR, RESET Instruction, Stack Full, Stack Underflow (PWRT, OST)	POR, BOR, RESET Instruction, Stack Full, Stack Underflow (PWRT, OST)
Programmable Low Voltage Detect		Yes	Yes	Yes	Yes
Programmable Brown-out Reset		Yes	Yes	Yes	Yes
CAN Module		Yes	Yes	Yes	Yes
In-Circuit Serial Programming™ (ICSP™)		Yes	Yes	Yes	Yes
Instruction Set		75 Instructions	75 Instructions	75 Instructions	75 Instructions
Packages		28-pin SPDIP 28-pin SOIC	28-pin SPDIP 28-pin SOIC	40-pin PDIP 44-pin PLCC 44-pin TQFP	40-pin PDIP 44-pin PLCC 44-pin TQFP

FIGURE 1-1: PIC18F248/258 BLOCK DIAGRAM

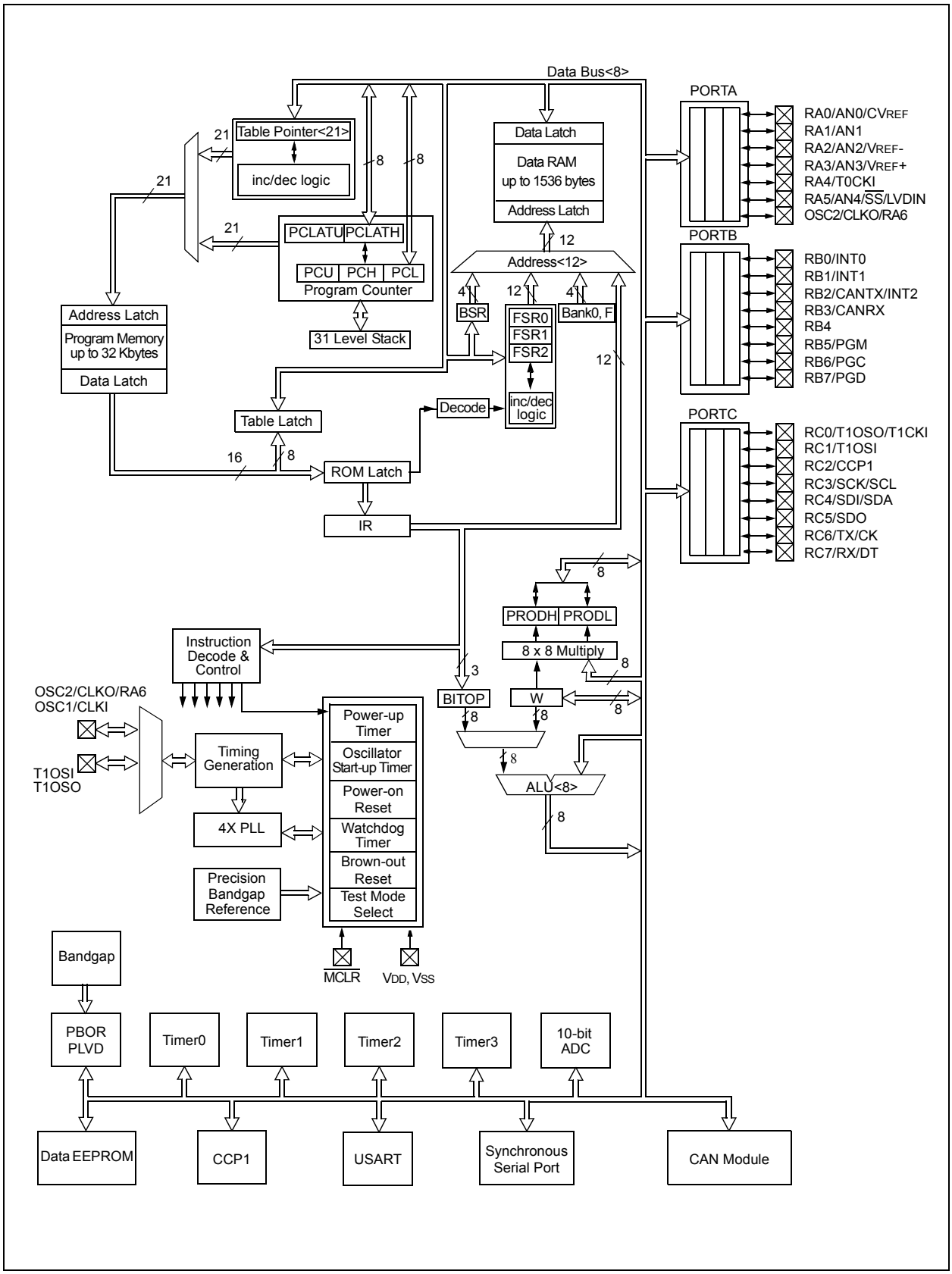

© 2003 Microchip Technology Inc.

FIGURE 1-2: PIC18F448/458 BLOCK DIAGRAM

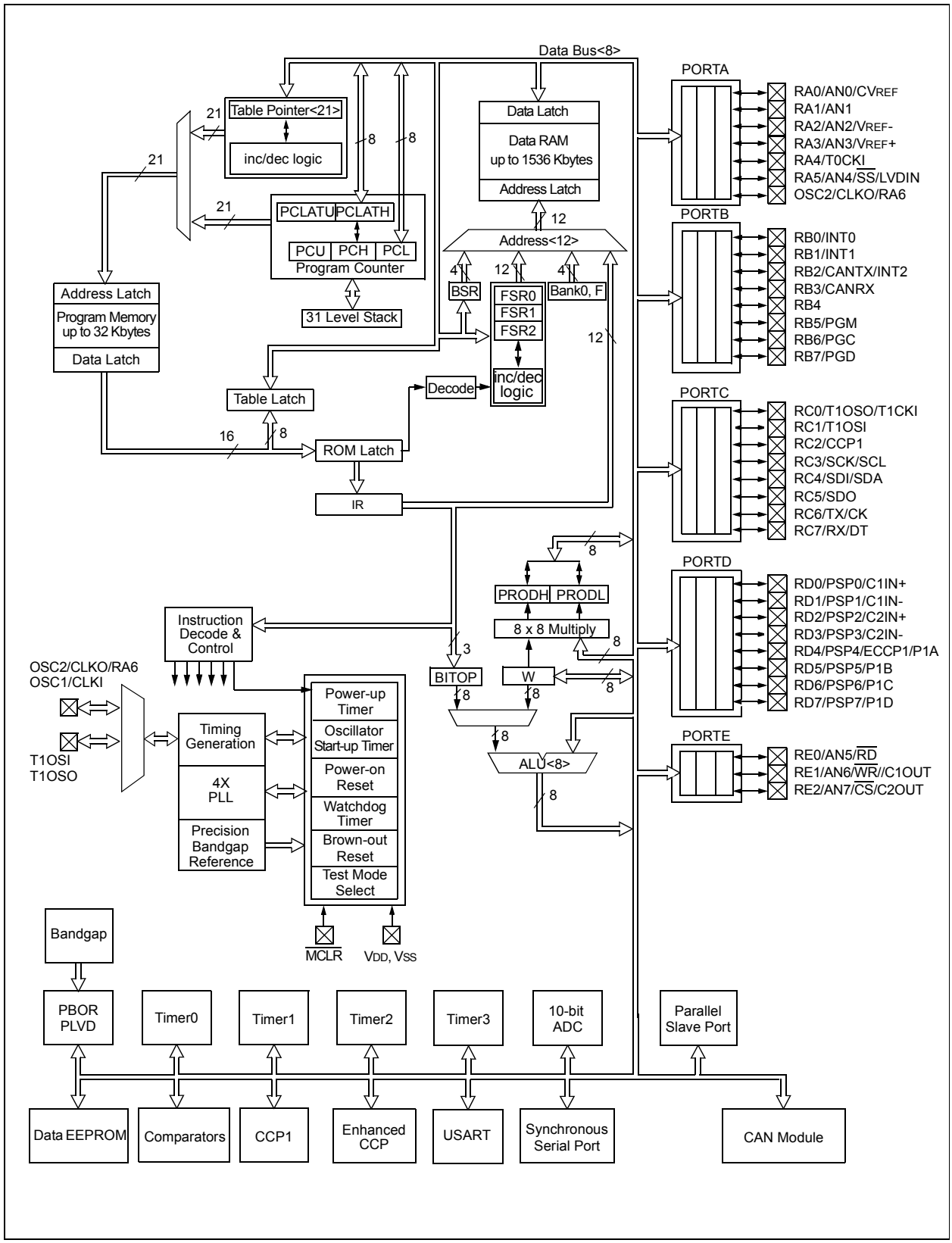

TABLE 1-2: PIC18FXX8 PINOUT I/O DESCRIPTIONS

Pin Name	Pin Number				Pin Type	Buffer Type	Description
	PIC18F248/258	PIC18F448/458					
	SPDIP, SOIC	PDIP	TQFP	PLCC			
$\overline{MCLR}$/VPP	1	1	18	2			Master Clear (input) or programming voltage (output).
$\overline{MCLR}$					I	ST	Master Clear (Reset) input. This pin is an active low RESET to the device.
VPP					P	—	Programming voltage input.
NC	—	—	12, 13, 33, 34	1, 17, 28, 40	—	—	These pins should be left unconnected.
OSC1/CLKI	9	13	30	14			Oscillator crystal or external clock input.
OSC1					I	CMOS/ST	Oscillator crystal input or external clock source input. ST buffer when configured in RC mode. Otherwise CMOS.
CLKI					I	CMOS	External clock source input. Always associated with pin function OSC1 (see OSC1/ CLKI, OSC2/CLKO pins).
OSC2/CLKO/RA6	10	14	31	15			Oscillator crystal or clock output.
OSC2					O	—	Oscillator crystal output. Connects to crystal or resonator in Crystal Oscillator mode.
CLKO					O	—	In RC mode, OSC2 pin outputs CLKO, which has 1/4 the frequency of OSC1 and denotes the instruction cycle rate.
RA6					I/O	TTL	General purpose I/O pin.

Legend: TTL = TTL compatible input; CMOS = CMOS compatible input or output; ST = Schmitt Trigger input with CMOS levels; Analog = Analog input; I = Input; O = Output; P = Power; OD = Open Drain (no P diode to VDD)

© 2003 Microchip Technology Inc.

TABLE 1-2: PIC18FXX8 PINOUT I/O DESCRIPTIONS (CONTINUED)

Pin Name	Pin Number				Pin Type	Buffer Type	Description
	PIC18F248/258	PIC18F448/458					
	SPDIP, SOIC	PDIP	TQFP	PLCC			
							PORTA is a bi-directional I/O port.
RA0/AN0/CVREF	2	2	19	3			
RA0					I/O	TTL	Digital I/O.
AN0					I	Analog	Analog input 0.
CVREF					O	Analog	Comparator voltage reference output.
RA1/AN1	3	3	20	4			
RA1					I/O	TTL	Digital I/O.
AN1					I	Analog	Analog input 1.
RA2/AN2/VREF-	4	4	21	5			
RA2					I/O	TTL	Digital I/O.
AN2					I	Analog	Analog input 2.
VREF-					I	Analog	A/D reference voltage (Low) input.
RA3/AN3/VREF+	5	5	22	6			
RA3					I/O	TTL	Digital I/O.
AN3					I	Analog	Analog input 3.
VREF+					I	Analog	A/D reference voltage (High) input.
RA4/T0CKI	6	6	23	7			
RA4					I/O	TTL/OD	Digital I/O - open drain when configured as output.
T0CKI					I	ST	Timer0 external clock input.
RA5/AN4/$\overline{SS}$/LVDIN	7	7	24	8			
RA5					I/O	TTL	Digital I/O.
AN4					I	Analog	Analog input 4.
$\overline{SS}$					I	ST	SPI slave select input.
LVDIN					I	Analog	Low voltage detect input.
RA6							See the OSC2/CLKO/RA6 pin.

Legend: TTL = TTL compatible input; CMOS = CMOS compatible input or output
ST = Schmitt Trigger input with CMOS levels; Analog = Analog input
I = Input; O = Output
P = Power; OD = Open Drain (no P diode to VDD)

TABLE 1-2: PIC18FXX8 PINOUT I/O DESCRIPTIONS (CONTINUED)

Pin Name	Pin Number				Pin Type	Buffer Type	Description
	PIC18F248/258	PIC18F448/458					
	SPDIP, SOIC	PDIP	TQFP	PLCC			
							PORTB is a bi-directional I/O port. PORTB can be software programmed for internal weak pull-ups on all inputs.
RB0/INT0	21	33	8	36			
RB0					I/O	TTL	Digital I/O.
INT0					I	ST	External interrupt 0.
RB1/INT1	22	34	9	37			
RB1					I/O	TTL	Digital I/O.
INT1					I	ST	External interrupt 1.
RB2/CANTX/INT2	23	35	10	38			
RB2					I/O	TTL	Digital I/O.
CANTX					O	TTL	Transmit signal for CAN bus.
INT2					I	ST	External interrupt 2.
RB3/CANRX	24	36	11	39			
RB3					I/O	TTL	Digital I/O.
CANRX					I	TTL	Receive signal for CAN bus.
RB4	25	37	14	41	I/O	TTL	Digital I/O. Interrupt-on-change pin.
RB5/PGM	26	38	15	42			
RB5					I/O	TTL	Digital I/O. Interrupt-on-change pin.
PGM					I	ST	Low voltage ICSP programming enable.
RB6/PGC	27	39	16	43			
RB6					I/O	TTL	Digital I/O. In-Circuit Debugger pin. Interrupt-on-change pin.
PGC					I	ST	ICSP programming clock.
RB7/PGD	28	40	17	44			
RB7					I/O	TTL	Digital I/O. In-Circuit Debugger pin. Interrupt-on-change pin.
PGD					I/O	ST	ICSP programming data.

Legend: TTL = TTL compatible input; CMOS = CMOS compatible input or output; ST = Schmitt Trigger input with CMOS levels; Analog = Analog input; I = Input; O = Output; P = Power; OD = Open Drain (no P diode to V_{DD})

© 2003 Microchip Technology Inc.

TABLE 1-2: PIC18FXX8 PINOUT I/O DESCRIPTIONS (CONTINUED)

Pin Name	Pin Number				Pin Type	Buffer Type	Description
	PIC18F248/258	PIC18F448/458					
	SPDIP, SOIC	PDIP	TQFP	PLCC			
							PORTC is a bi-directional I/O port.
RC0/T1OSO/T1CKI	11	15	32	16			
RC0					I/O	ST	Digital I/O.
T1OSO					O	—	Timer1 oscillator output.
T1CKI					I	ST	Timer1/Timer3 external clock input.
RC1/T1OSI	12	16	35	18			
RC1					I/O	ST	Digital I/O.
T1OSI					I	CMOS	Timer1 oscillator input.
RC2/CCP1	13	17	36	19			
RC2					I/O	ST	Digital I/O.
CCP1					I/O	ST	Capture1 input/Compare1 output/PWM1 output.
RC3/SCK/SCL	14	18	37	20			
RC3					I/O	ST	Digital I/O.
SCK					I/O	ST	Synchronous serial clock input/output for SPI mode.
SCL					I/O	ST	Synchronous serial clock input/output for I^2C mode.
RC4/SDI/SDA	15	23	42	25			
RC4					I/O	ST	Digital I/O.
SDI					I	ST	SPI data in.
SDA					I/O	ST	I^2C data I/O.
RC5/SDO	16	24	43	26			
RC5					I/O	ST	Digital I/O.
SDO					O	—	SPI data out.
RC6/TX/CK	17	25	44	27			
RC6					I/O	ST	Digital I/O.
TX					O	—	USART asynchronous transmit.
CK					I/O	ST	USART synchronous clock (see RX/DT).
RC7/RX/DT	18	26	1	29			
RC7					I/O	ST	Digital I/O.
RX					I	ST	USART asynchronous receive.
DT					I/O	ST	USART synchronous data (see TX/CK).

Legend: TTL = TTL compatible input; CMOS = CMOS compatible input or output
ST = Schmitt Trigger input with CMOS levels; Analog = Analog input
I = Input; O = Output
P = Power; OD = Open Drain (no P diode to V_{DD})

TABLE 1-2: PIC18FXX8 PINOUT I/O DESCRIPTIONS (CONTINUED)

Pin Name	Pin Number				Pin Type	Buffer Type	Description
	PIC18F248/258	PIC18F448/458					
	SPDIP, SOIC	PDIP	TQFP	PLCC			
							PORTD is a bi-directional I/O port. These pins have TTL input buffers when external memory is enabled.
RD0/PSP0/C1IN+	—	19	38	21			
RD0					I/O	ST	Digital I/O.
PSP0					I/O	TTL	Parallel slave port data.
C1IN+					I	Analog	Comparator 1 input.
RD1/PSP1/C1IN-	—	20	39	22			
RD1					I/O	ST	Digital I/O.
PSP1					I/O	TTL	Parallel slave port data.
C1IN-					I	Analog	Comparator 1 input.
RD2/PSP2/C2IN+	—	21	40	23			
RD2					I/O	ST	Digital I/O.
PSP2					I/O	TTL	Parallel slave port data.
C2IN+					I	Analog	Comparator 2 input.
RD3/PSP3/C2IN-	—	22	41	24			
RD3					I/O	ST	Digital I/O.
PSP3					I/O	TTL	Parallel slave port data.
C2IN-					I	Analog	Comparator 2 input.
RD4/PSP4/ECCP1/ P1A	—	27	2	30			
RD4					I/O	ST	Digital I/O.
PSP4					I/O	TTL	Parallel slave port data.
ECCP1					I/O	ST	ECCP1 capture/compare.
P1A					O	—	ECCP1 PWM output A.
RD5/PSP5/P1B	—	28	3	31			
RD5					I/O	ST	Digital I/O.
PSP5					I/O	TTL	Parallel slave port data.
P1B					O	—	ECCP1 PWM output B.
RD6/PSP6/P1C	—	29	4	32			
RD6					I/O	ST	Digital I/O.
PSP6					I/O	TTL	Parallel slave port data.
P1C					O	—	ECCP1 PWM output C.
RD7/PSP7/P1D	—	30	5	33			
RD7					I/O	ST	Digital I/O.
PSP7					I/O	TTL	Parallel slave port data.
P1D					O	—	ECCP1 PWM output D.

Legend: TTL = TTL compatible input; CMOS = CMOS compatible input or output; ST = Schmitt Trigger input with CMOS levels; Analog = Analog input; I = Input; O = Output; P = Power; OD = Open Drain (no P diode to V_{DD})

© 2003 Microchip Technology Inc.

TABLE 1-2: PIC18FXX8 PINOUT I/O DESCRIPTIONS (CONTINUED)

Pin Name	Pin Number				Pin Type	Buffer Type	Description
	PIC18F248/258	PIC18F448/458					
	SPDIP, SOIC	PDIP	TQFP	PLCC			
							PORTE is a bi-directional I/O port.
RE0/AN5/$\overline{RD}$	—	8	25	9			
RE0					I/O	ST	Digital I/O.
AN5					I	Analog	Analog input 5.
$\overline{RD}$					I	TTL	Read control for parallel slave port (see $\overline{WR}$ and $\overline{CS}$ pins).
RE1/AN6/$\overline{WR}$/C1OUT	—	9	26	10			
RE1					I/O	ST	Digital I/O.
AN6					I	Analog	Analog input 6.
$\overline{WR}$					I	TTL	Write control for parallel slave port (see $\overline{CS}$ and $\overline{RD}$ pins).
C1OUT					O	Analog	Comparator 1 output.
RE2/AN7/$\overline{CS}$/C2OUT	—	10	27	11			
RE2					I/O	ST	Digital I/O.
AN7					I	Analog	Analog input 7.
$\overline{CS}$					I	TTL	Chip select control for parallel slave port (see $\overline{RD}$ and $\overline{WR}$ pins).
C2OUT					O	Analog	Comparator 2 output.
VSS	19, 8	12, 31	6, 29	13, 34	—	—	Ground reference for logic and I/O pins.
VDD	20	11, 32	7, 28	12, 35	—	—	Positive supply for logic and I/O pins.

Legend: TTL = TTL compatible input; CMOS = CMOS compatible input or output; ST = Schmitt Trigger input with CMOS levels; Analog = Analog input; I = Input; O = Output; P = Power; OD = Open Drain (no P diode to VDD)

NOTES:

© 2003 Microchip Technology Inc.

2.0 OSCILLATOR CONFIGURATIONS

2.1 Oscillator Types

The PIC18FXX8 can be operated in one of eight Oscillator modes, programmable by three configuration bits (FOSC2, FOSC1, and FOSC0).

1. LP Low Power Crystal
2. XT Crystal/Resonator
3. HS High Speed Crystal/Resonator
4. HS4 High Speed Crystal/Resonator with PLL enabled
5. RC External Resistor/Capacitor
6. RCIO External Resistor/Capacitor with I/O pin enabled
7. EC External Clock
8. ECIO External Clock with I/O pin enabled

2.2 Crystal Oscillator/Ceramic Resonators

In XT, LP, HS or HS4 (PLL) Oscillator modes, a crystal or ceramic resonator is connected to the OSC1 and OSC2 pins to establish oscillation. Figure 2-1 shows the pin connections. An external clock source may also be connected to the OSC1 pin, as shown in Figure 2-3 and Figure 2-4.

The PIC18FXX8 oscillator design requires the use of a parallel cut crystal.

Note:	Use of a series cut crystal may give a frequency out of the crystal manufacturer's specifications.

FIGURE 2-1: CRYSTAL/CERAMIC RESONATOR OPERATION (HS, XT OR LP OSC CONFIGURATION)

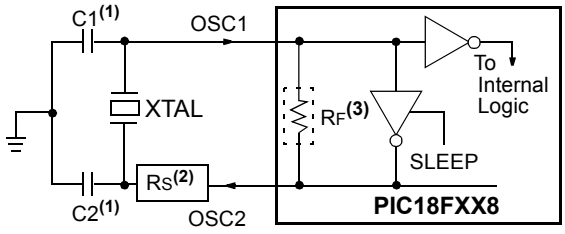

Note 1: See Table 2-1 and Table 2-2 for recommended values of C1 and C2.

2: A series resistor (RS) may be required for AT strip cut crystals.

3: RF varies with the crystal chosen.

TABLE 2-1: CERAMIC RESONATORS

Ranges Tested:			
Mode	**Freq**	**OSC1**	**OSC2**
XT	455 kHz	68 - 100 pF	68 - 100 pF
	2.0 MHz	15 - 68 pF	15 - 68 pF
	4.0 MHz	15 - 68 pF	15 - 68 pF
HS	8.0 MHz	10 - 68 pF	10 - 68 pF
	16.0 MHz	10 - 22 pF	10 - 22 pF
These values are for design guidance only. See notes following Table 2-2.			
Resonators Used:			
455 kHz	Panasonic EFO-A455K04B	± 0.3%	
2.0 MHz	Murata Erie CSA2.00MG	± 0.5%	
4.0 MHz	Murata Erie CSA4.00MG	± 0.5%	
8.0 MHz	Murata Erie CSA8.00MT	± 0.5%	
16.0 MHz	Murata Erie CSA16.00MX	± 0.5%	
All resonators used did not have built-in capacitors.			

TABLE 2-2: CAPACITOR SELECTION FOR CRYSTAL OSCILLATOR

Osc Type	Crystal Freq	Cap. Range C1	Cap. Range C2
LP	32.0 kHz	33 pF	33 pF
	200 kHz	15 pF	15 pF
XT	200 kHz	47-68 pF	47-68 pF
	1.0 MHz	15 pF	15 pF
	4.0 MHz	15 pF	15 pF
HS	4.0 MHz	15 pF	15 pF
	8.0 MHz	15-33 pF	15-33 pF
	20.0 MHz	15-33 pF	15-33 pF
	25.0 MHz	15-33 pF	15-33 pF
These values are for design guidance only. See notes on this page.			
Crystals Used			
32.0 kHz	Epson C-001R32.768K-A	± 20 PPM	
200 kHz	STD XTL 200.000KHz	± 20 PPM	
1.0 MHz	ECS ECS-10-13-1	± 50 PPM	
4.0 MHz	ECS ECS-40-20-1	± 50 PPM	
8.0 MHz	EPSON CA-301 8.000M-C	± 30 PPM	
20.0 MHz	EPSON CA-301 20.000M-C	± 30 PPM	

Note 1: Recommended values of C1 and C2 are identical to the ranges tested (Table 2-1).

2: Higher capacitance increases the stability of the oscillator, but also increases the start-up time.

3: Since each resonator/crystal has its own characteristics, the user should consult the resonator/crystal manufacturer for appropriate values of external components.

4: Rs may be required in HS mode, as well as XT mode, to avoid overdriving crystals with low drive level specification.

2.3 RC Oscillator

For timing insensitive applications, the “RC” and "RCIO" device options offer additional cost savings. The RC oscillator frequency is a function of the supply voltage, the resistor (R_{EXT}) and capacitor (C_{EXT}) values and the operating temperature. In addition to this, the oscillator frequency will vary from unit to unit due to normal process parameter variation. Furthermore, the difference in lead frame capacitance between package types will also affect the oscillation frequency, especially for low C_{EXT} values. The user also needs to take into account variation due to tolerance of external R and C components used. Figure 2-2 shows how the RC combination is connected.

In the RC Oscillator mode, the oscillator frequency divided by 4 is available on the OSC2 pin. This signal may be used for test purposes or to synchronize other logic.

Note: If the oscillator frequency divided by 4 signal is not required in the application, it is recommended to use RCIO mode to save current.

FIGURE 2-2: RC OSCILLATOR MODE

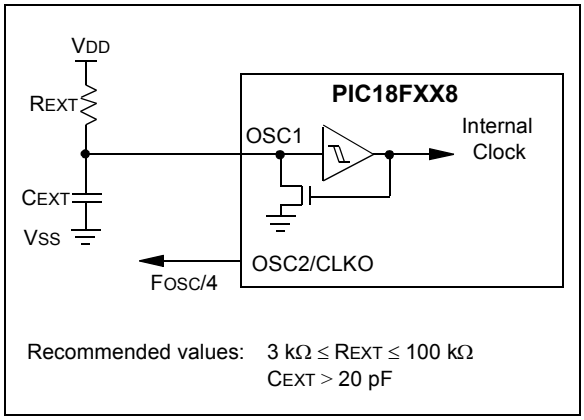

The RCIO Oscillator mode functions like the RC mode, except that the OSC2 pin becomes an additional general purpose I/O pin. The I/O pin becomes bit 6 of PORTA (RA6).

© 2003 Microchip Technology Inc.

2.4 External Clock Input

The EC and ECIO Oscillator modes require an external clock source to be connected to the OSC1 pin. The feedback device between OSC1 and OSC2 is turned off in these modes to save current. There is no oscillator start-up time required after a Power-on Reset or after a recovery from SLEEP mode.

In the EC Oscillator mode, the oscillator frequency divided by 4 is available on the OSC2 pin. This signal may be used for test purposes or to synchronize other logic. Figure 2-3 shows the pin connections for the EC Oscillator mode.

FIGURE 2-3: EXTERNAL CLOCK INPUT OPERATION (EC OSC CONFIGURATION)

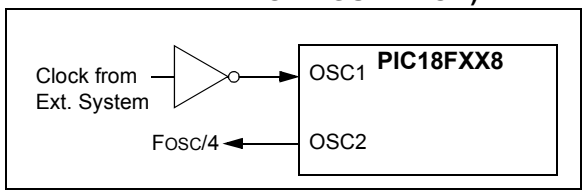

The ECIO Oscillator mode functions like the EC mode, except that the OSC2 pin becomes an additional general purpose I/O pin. Figure 2-4 shows the pin connections for the ECIO Oscillator mode.

FIGURE 2-4: EXTERNAL CLOCK INPUT OPERATION (ECIO CONFIGURATION)

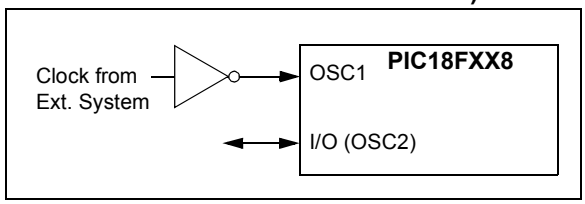

2.5 HS4 (PLL)

A Phase Locked Loop circuit is provided as a programmable option for users that want to multiply the frequency of the incoming crystal oscillator signal by 4. For an input clock frequency of 10 MHz, the internal clock frequency will be multiplied to 40 MHz. This is useful for customers who are concerned with EMI due to high frequency crystals.

The PLL can only be enabled when the oscillator configuration bits are programmed for HS mode. If they are programmed for any other mode, the PLL is not enabled and the system clock will come directly from OSC1.

The PLL is one of the modes of the FOSC2:FOSC0 configuration bits. The Oscillator mode is specified during device programming.

A PLL lock timer is used to ensure that the PLL has locked before device execution starts. The PLL lock timer has a time-out referred to as TPLL.

FIGURE 2-5: PLL BLOCK DIAGRAM

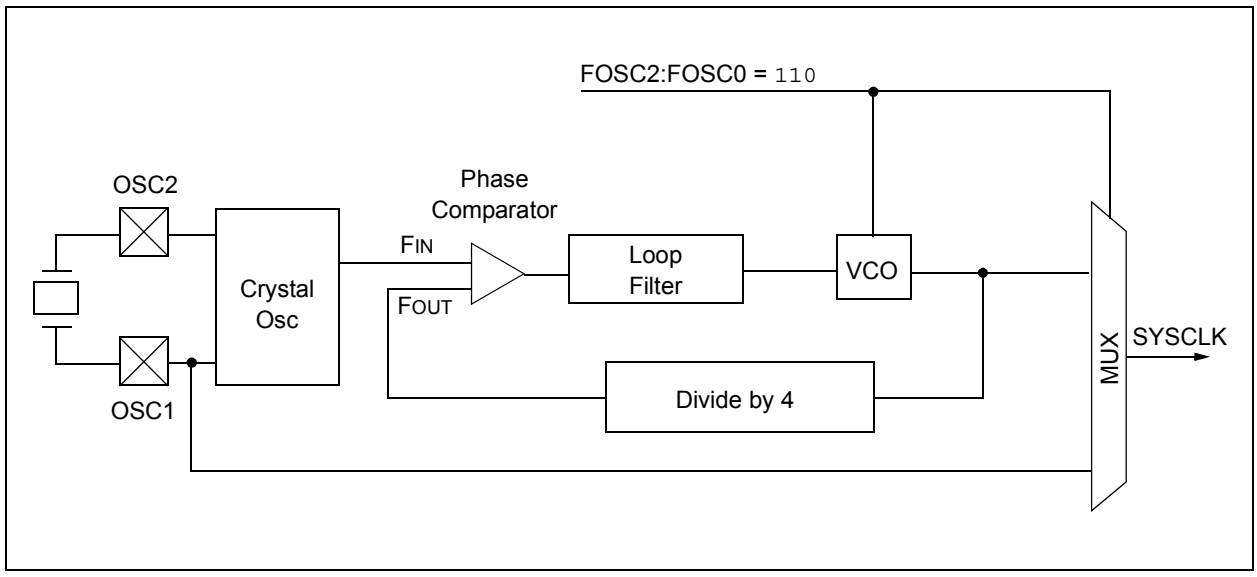

2.6 Oscillator Switching Feature

The PIC18FXX8 devices include a feature that allows the system clock source to be switched from the main oscillator to an alternate low frequency clock source. For the PIC18FXX8 devices, this alternate clock source is the Timer1 oscillator. If a low frequency crystal (32 kHz, for example) has been attached to the Timer1 oscillator pins and the Timer1 oscillator has been enabled, the device can switch to a Low Power Execution mode. Figure 2-6 shows a block diagram of the system clock sources. The clock switching feature is enabled by programming the Oscillator Switching Enable ($\overline{\text{OSCSEN}}$) bit in Configuration register, CONFIG1H, to a '0'. Clock switching is disabled in an erased device. See Section 12.2 for further details of the Timer1 oscillator, and Section 24.1 for Configuration Register details.

2.6.1 SYSTEM CLOCK SWITCH BIT

The system clock source switching is performed under software control. The system clock switch bit, SCS (OSCCON register), controls the clock switching. When the SCS bit is '0', the system clock source comes from the main oscillator selected by the FOSC2:FOSC0 configuration bits. When the SCS bit is set, the system clock source comes from the Timer1 oscillator. The SCS bit is cleared on all forms of RESET.

Note:	The Timer1 oscillator must be enabled to switch the system clock source. The Timer1 oscillator is enabled by setting the T1OSCEN bit in the Timer1 control register (T1CON). If the Timer1 oscillator is not enabled, any write to the SCS bit will be ignored (SCS bit forced cleared) and the main oscillator continues to be the system clock source.

FIGURE 2-6: DEVICE CLOCK SOURCES

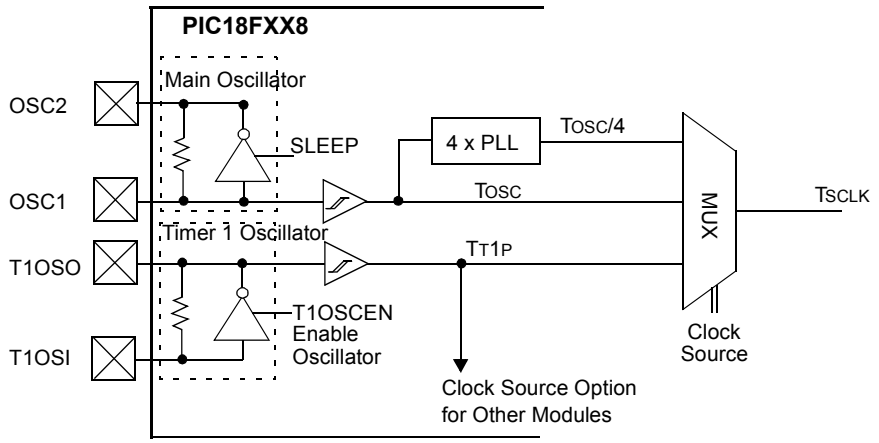

Note: I/O pins have diode protection to VDD and VSS.

REGISTER 2-1: OSCCON REGISTER

U-0	U-0	U-0	U-0	U-0	U-0	U-0	R/W-1
—	—	—	—	—	—	—	SCS
bit 7							bit 0

bit 7-1 **Unimplemented:** Read as '0'

bit 0 **SCS:** System Clock Switch bit

When $\overline{\text{OSCSEN}}$ configuration bit = 0 and T1OSCEN bit is set:
1 = Switch to Timer1 oscillator/clock pin
0 = Use primary oscillator/clock input pin

When $\overline{\text{OSCSEN}}$ is clear or T1OSCEN is clear:
Bit is forced clear

Legend:			
R = Readable bit	W = Writable bit	U = Unimplemented bit, read as '0'	
- n = Value at POR	'1' = Bit is set	'0' = Bit is cleared	x = Bit is unknown

© 2003 Microchip Technology Inc.

2.6.2 OSCILLATOR TRANSITIONS

The PIC18FXX8 devices contain circuitry to prevent "glitches" when switching between oscillator sources. Essentially, the circuitry waits for eight rising edges of the clock source that the processor is switching to. This ensures that the new clock source is stable and that its pulse width will not be less than the shortest pulse width of the two clock sources.

Figure 2-7 shows a timing diagram indicating the transition from the main oscillator to the Timer1 oscillator. The Timer1 oscillator is assumed to be running all the time. After the SCS bit is set, the processor is frozen at the next occurring Q1 cycle. After eight synchronization cycles are counted from the Timer1 oscillator, operation resumes. No additional delays are required after the synchronization cycles.

The sequence of events that takes place when switching from the Timer1 oscillator to the main oscillator will depend on the mode of the main oscillator. In addition to eight clock cycles of the main oscillator, additional delays may take place.

If the main oscillator is configured for an external crystal (HS, XT, LP), the transition will take place after an oscillator start-up time (TOST) has occurred. A timing diagram indicating the transition from the Timer1 oscillator to the main oscillator for HS, XT, and LP modes is shown in Figure 2-8.

FIGURE 2-7: TIMING DIAGRAM FOR TRANSITION FROM OSC1 TO TIMER1 OSCILLATOR

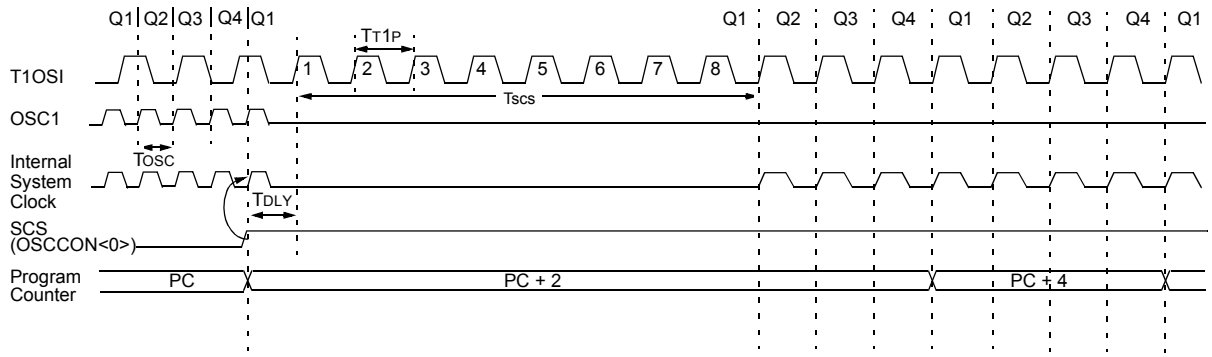

Note 1: Delay on internal system clock is eight oscillator cycles for synchronization.

FIGURE 2-8: TIMING DIAGRAM FOR TRANSITION BETWEEN TIMER1 AND OSC1 (HS, XT, LP)

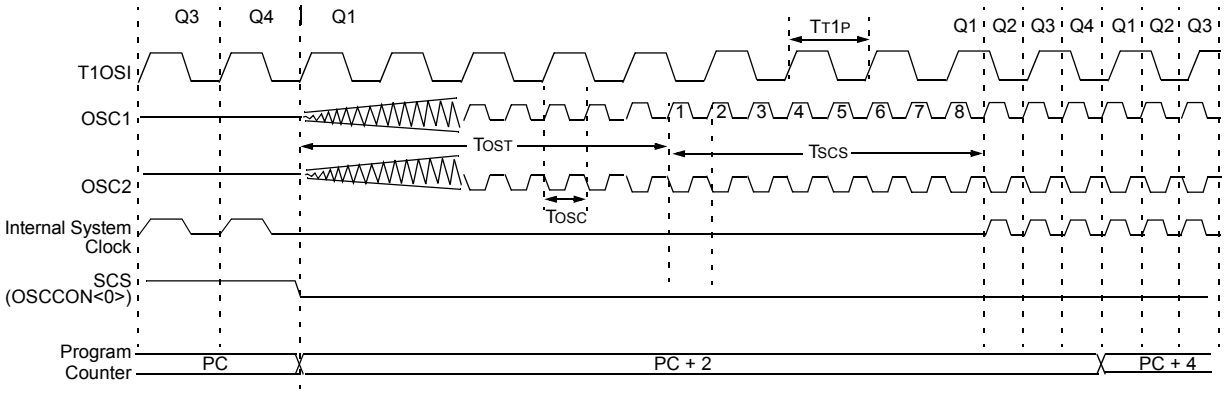

Note 1: TOST = 1024 TOSC (drawing not to scale).

If the main oscillator is configured for HS4 (PLL) mode, an oscillator start-up time (TOST) plus an additional PLL time-out (TPLL) will occur. The PLL time-out is typically 2 ms and allows the PLL to lock to the main oscillator frequency. A timing diagram indicating the transition from the Timer1 oscillator to the main oscillator for HS4 mode is shown in Figure 2-9.

If the main oscillator is configured in the RC, RCIO, EC or ECIO modes, there is no oscillator start-up time-out. Operation will resume after eight cycles of the main oscillator have been counted. A timing diagram indicating the transition from the Timer1 oscillator to the main oscillator for RC, RCIO, EC and ECIO modes is shown in Figure 2-10.

FIGURE 2-9: TIMING FOR TRANSITION BETWEEN TIMER1 AND OSC1 (HS WITH PLL)

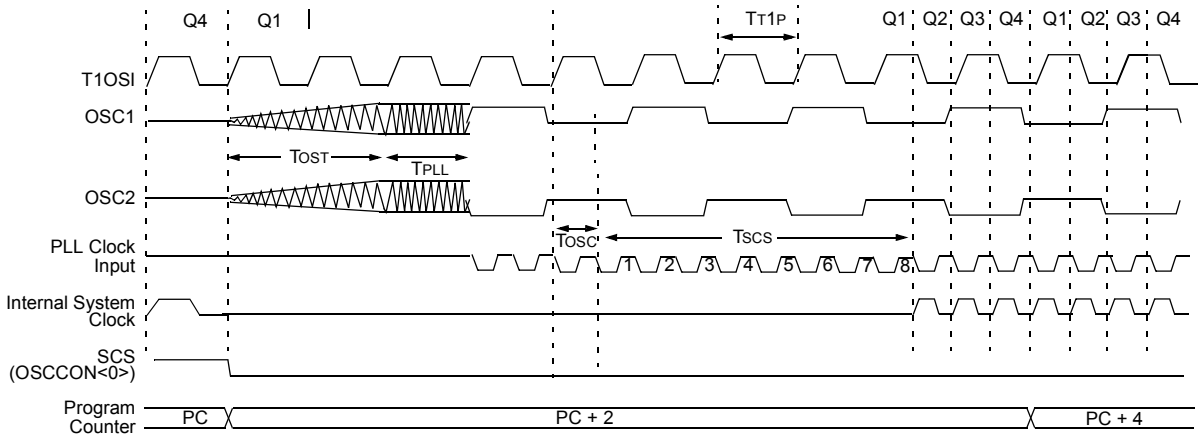

Note 1: TOST = 1024 TOSC (drawing not to scale).

FIGURE 2-10: TIMING FOR TRANSITION BETWEEN TIMER1 AND OSC1 (RC, EC)

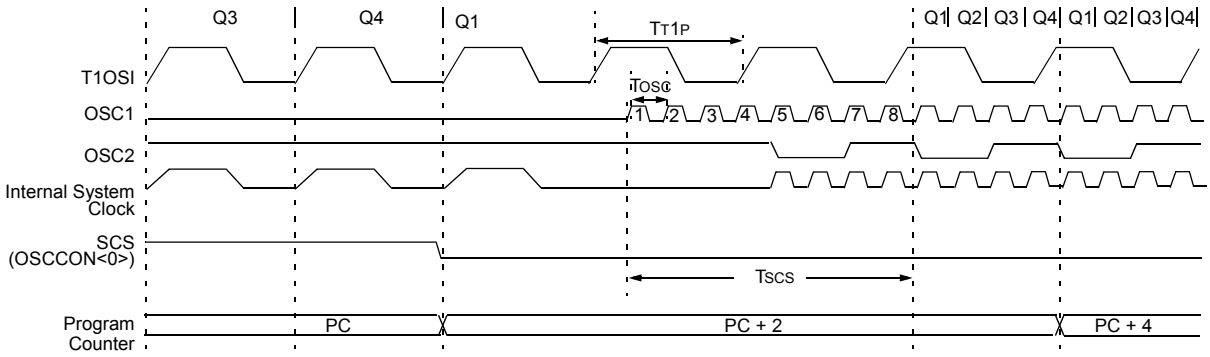

Note 1: RC Oscillator mode assumed.

© 2003 Microchip Technology Inc.

2.7 Effects of SLEEP Mode on the On-Chip Oscillator

When the device executes a SLEEP instruction, the on-chip clocks and oscillator are turned off and the device is held at the beginning of an instruction cycle (Q1 state). With the oscillator off, the OSC1 and OSC2 signals will stop oscillating. Since all the transistor switching currents have been removed, SLEEP mode achieves the lowest current consumption of the device (only leakage currents). Enabling any on-chip feature that will operate during SLEEP will increase the current consumed during SLEEP. The user can wake from SLEEP through external RESET, Watchdog Timer Reset, or through an interrupt.

2.8 Power-up Delays

Power-up delays are controlled by two timers, so that no external RESET circuitry is required for most applications. The delays ensure that the device is kept in RESET until the device power supply and clock are stable. For additional information on RESET operation, see Section 3.0.

The first timer is the Power-up Timer (PWRT), which optionally provides a fixed delay of TPWRT (parameter #D033) on power-up only (POR and BOR). The second timer is the Oscillator Start-up Timer (OST), intended to keep the chip in RESET until the crystal oscillator is stable.

With the PLL enabled (HS4 Oscillator mode), the time-out sequence following a Power-on Reset is different from other Oscillator modes. The time-out sequence is as follows: the PWRT time-out is invoked after a POR time delay has expired, then the Oscillator Start-up Timer (OST) is invoked. However, this is still not a sufficient amount of time to allow the PLL to lock at high frequencies. The PWRT timer is used to provide an additional fixed 2 ms (nominal) to allow the PLL ample time to lock to the incoming clock frequency.

TABLE 2-3: OSC1 AND OSC2 PIN STATES IN SLEEP MODE

OSC Mode	OSC1 Pin	OSC2 Pin
RC	Floating, external resistor should pull high	At logic low
RCIO	Floating, external resistor should pull high	Configured as PORTA, bit 6
ECIO	Floating	Configured as PORTA, bit 6
EC	Floating	At logic low
LP, XT, and HS	Feedback inverter disabled, at quiescent voltage level	Feedback inverter disabled, at quiescent voltage level

Note: See Table 3-1 in Section 3.0, for time-outs due to SLEEP and $\overline{\text{MCLR}}$ Reset.

NOTES:

© 2003 Microchip Technology Inc.

3.0 RESET

The PIC18FXX8 differentiates between various kinds of RESET:

a) Power-on Reset (POR)
b) $\overline{\text{MCLR}}$ Reset during normal operation
c) $\overline{\text{MCLR}}$ Reset during SLEEP
d) Watchdog Timer (WDT) Reset during normal operation
e) Programmable Brown-out Reset (PBOR)
f) RESET Instruction
g) Stack Full Reset
h) Stack Underflow Reset

Most registers are unaffected by a RESET. Their status is unknown on POR and unchanged by all other RESETS. The other registers are forced to a "RESET" state on Power-on Reset, $\overline{\text{MCLR}}$, WDT Reset, Brown-out Reset, $\overline{\text{MCLR}}$ Reset during SLEEP and by the RESET instruction.

Most registers are not affected by a WDT wake-up, since this is viewed as the resumption of normal operation. Status bits from the RCON register, $\overline{\text{RI}}$, $\overline{\text{TO}}$, $\overline{\text{PD}}$, $\overline{\text{POR}}$ and $\overline{\text{BOR}}$ are set or cleared differently in different RESET situations, as indicated in Table 3-2. These bits are used in software to determine the nature of the RESET. See Table 3-3 for a full description of the RESET states of all registers.

A simplified block diagram of the on-chip RESET circuit is shown in Figure 3-1.

The Enhanced MCU devices have a $\overline{\text{MCLR}}$ noise filter in the $\overline{\text{MCLR}}$ Reset path. The filter will detect and ignore small pulses.

A WDT Reset does not drive $\overline{\text{MCLR}}$ pin low.

FIGURE 3-1: SIMPLIFIED BLOCK DIAGRAM OF ON-CHIP RESET CIRCUIT

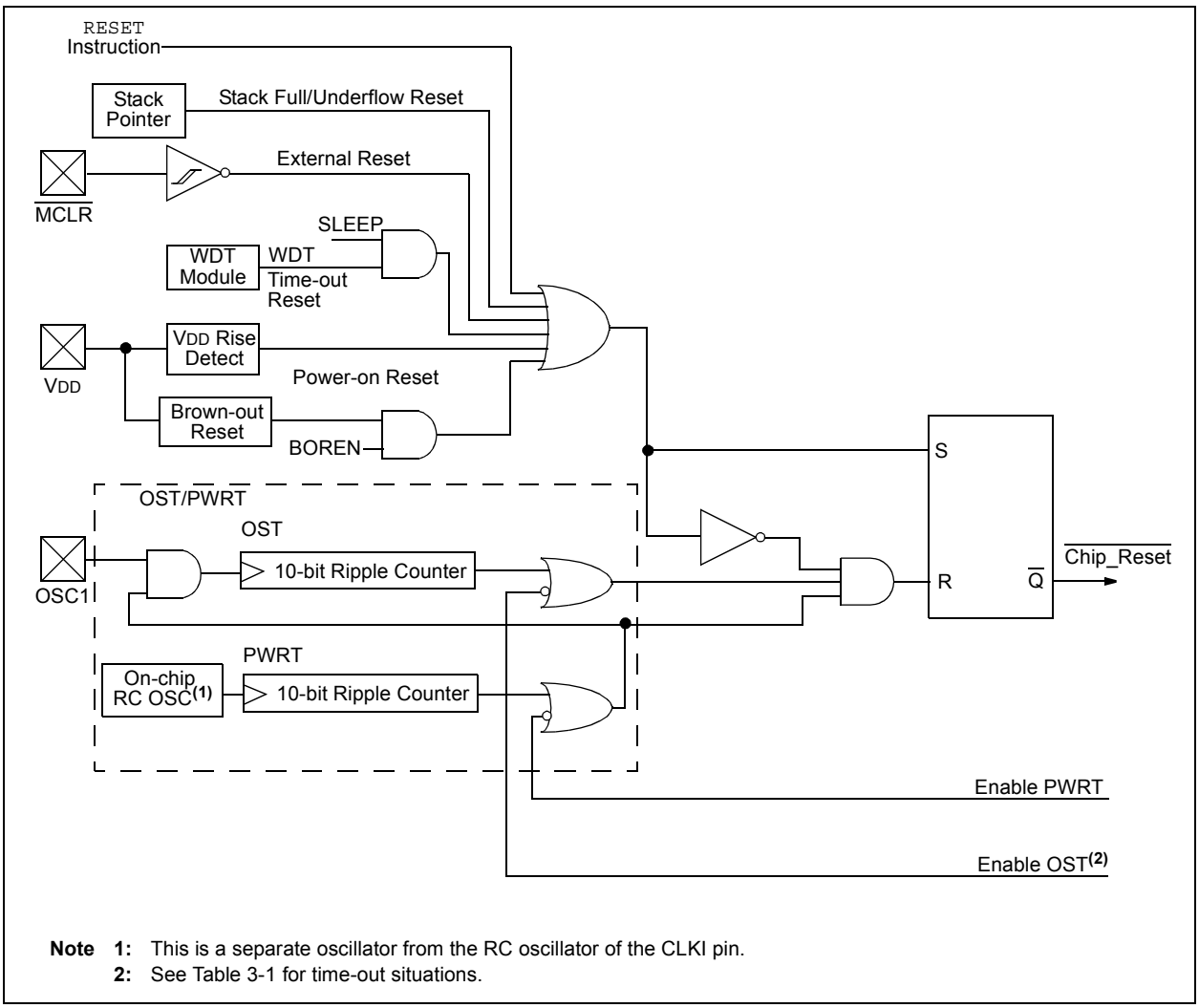

Note 1: This is a separate oscillator from the RC oscillator of the CLKI pin.
2: See Table 3-1 for time-out situations.

3.1 Power-on Reset (POR)

A Power-on Reset pulse is generated on-chip when a VDD rise is detected. To take advantage of the POR circuitry, connect the MCLR pin directly (or through a resistor) to VDD. This eliminates external RC components usually needed to create a Power-on Reset delay. A minimum rise rate for VDD is specified (refer to parameter D004). For a slow rise time, see Figure 3-2.

When the device starts normal operation (exits the RESET condition), device operating parameters (voltage, frequency, temperature, etc.) must be met to ensure operation. If these conditions are not met, the device must be held in RESET until the operating conditions are met. Brown-out Reset may be used to meet the voltage start-up condition.

3.2 MCLR

PIC18FXX8 devices have a noise filter in the MCLR Reset path. The filter will detect and ignore small pulses.

It should be noted that a WDT Reset does not drive MCLR pin low.

The behavior of the ESD protection on the MCLR pin differs from previous devices of this family. Voltages applied to the pin that exceed its specification can result in both RESETS and current draws outside of device specification during the RESET event. For this reason, Microchip recommends that the MCLR pin no longer be tied directly to VDD. The use of an RC network, as shown in Figure 3-2, is suggested.

FIGURE 3-2: EXTERNAL POWER-ON RESET CIRCUIT (FOR SLOW VDD POWER-UP)

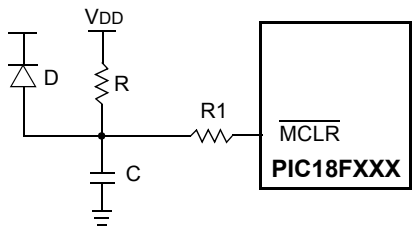

Note 1: External Power-on Reset circuit is required only if the VDD power-up slope is too slow. The diode D helps discharge the capacitor quickly when VDD powers down.

2: R < 40 kΩ is recommended to make sure that the voltage drop across R does not violate the device's electrical specification.

3: R1 = 100Ω to 1 kΩ will limit any current flowing into MCLR from external capacitor C, in the event of MCLR/VPP pin breakdown due to Electrostatic Discharge (ESD) or Electrical Overstress (EOS).

3.3 Power-up Timer (PWRT)

The Power-up Timer provides a fixed nominal time-out (parameter #33), only on power-up from the POR. The Power-up Timer operates on an internal RC oscillator. The chip is kept in RESET as long as the PWRT is active. The PWRT's time delay allows VDD to rise to an acceptable level. A configuration bit (PWRTEN in CONFIG2L register) is provided to enable/disable the PWRT.

The power-up time delay will vary from chip to chip due to VDD, temperature and process variation. See DC parameter #33 for details.

3.4 Oscillator Start-up Timer (OST)

The Oscillator Start-up Timer (OST) provides 1024 oscillator cycle (from OSC1 input) delay after the PWRT delay is over (parameter #32). This additional delay ensures that the crystal oscillator or resonator has started and stabilized.

The OST time-out is invoked only for XT, LP, HS and HS4 modes and only on Power-on Reset or wake-up from SLEEP.

3.5 PLL Lock Time-out

With the PLL enabled, the time-out sequence following a Power-on Reset is different from other oscillator modes. A portion of the Power-up Timer is used to provide a fixed time-out that is sufficient for the PLL to lock to the main oscillator frequency. This PLL lock time-out (TPLL) is typically 2 ms and follows the oscillator start-up time-out (OST).

3.6 Brown-out Reset (BOR)

A configuration bit, BOREN, can disable (if clear/programmed), or enable (if set), the Brown-out Reset circuitry. If VDD falls below parameter D005 for greater than parameter #35, the brown-out situation resets the chip. A RESET may not occur if VDD falls below parameter D005 for less than parameter #35. The chip will remain in Brown-out Reset until VDD rises above BVDD. The Power-up Timer will then be invoked and will keep the chip in RESET an additional time delay (parameter #33). If VDD drops below BVDD while the Power-up Timer is running, the chip will go back into a Brown-out Reset and the Power-up Timer will be initialized. Once VDD rises above BVDD, the Power-up Timer will execute the additional time delay.

© 2003 Microchip Technology Inc.

3.7 Time-out Sequence

On power-up, the time-out sequence is as follows: First, PWRT time-out is invoked after the POR time delay has expired, then OST is activated. The total time-out will vary based on oscillator configuration and the status of the PWRT. For example, in RC mode with the PWRT disabled, there will be no time-out at all. Figure 3-3, Figure 3-4, Figure 3-5, Figure 3-6 and Figure 3-7 depict time-out sequences on power-up.

Since the time-outs occur from the POR pulse, if $\overline{MCLR}$ is kept low long enough, the time-outs will expire. Bringing $\overline{MCLR}$ high will begin execution immediately (Figure 3-5). This is useful for testing purposes or to synchronize more than one PIC18FXX8 device operating in parallel.

Table 3-2 shows the RESET conditions for some Special Function Registers, while Table 3-3 shows the RESET conditions for all registers.

TABLE 3-1: TIME-OUT IN VARIOUS SITUATIONS

Oscillator Configuration	Power-up(2)		Brown-out(2)	Wake-up from SLEEP or Oscillator Switch
	$\overline{PWRTEN}$ = 0	$\overline{PWRTEN}$ = 1		
HS with PLL enabled(1)	72 ms + 1024 TOSC + 2 ms	1024 TOSC + 2 ms	72 ms + 1024 TOSC + 2 ms	1024 TOSC + 2 ms
HS, XT, LP	72 ms + 1024 TOSC	1024 TOSC	72 ms + 1024 TOSC	1024 TOSC
EC	72 ms	—	72 ms	—
External RC	72 ms	—	72 ms	—

Note 1: 2 ms = Nominal time required for the 4X PLL to lock.
2: 72 ms is the nominal power-up timer delay.

REGISTER 3-1: RCON REGISTER BITS AND POSITIONS

R/W-0	U-0	U-0	R/W-1	R/W-1	R/W-1	R/W-0	R/W-1
IPEN	—	—	$\overline{RI}$	$\overline{TO}$	$\overline{PD}$	$\overline{POR}$	$\overline{BOR}$
bit 7							bit 0

TABLE 3-2: STATUS BITS, THEIR SIGNIFICANCE AND THE INITIALIZATION CONDITION FOR RCON REGISTER

Condition	Program Counter	RCON Register	$\overline{RI}$	$\overline{TO}$	$\overline{PD}$	$\overline{POR}$	$\overline{BOR}$	STKFUL	STKUNF
Power-on Reset	0000h	0--1 1100	1	1	1	0	0	u	u
$\overline{MCLR}$ Reset during normal operation	0000h	0--u uuuu	u	u	u	u	u	u	u
Software Reset during normal operation	0000h	0--0 uuuu	0	u	u	u	u	u	u
Stack Full Reset during normal operation	0000h	0--u uu11	u	u	u	1	1	u	1
Stack Underflow Reset during normal operation	0000h	0--u uu11	u	u	u	1	1	1	u
$\overline{MCLR}$ Reset during SLEEP	0000h	0--u 10uu	u	1	0	u	u	u	u
WDT Reset	0000h	0--u 01uu	u	0	1	u	u	u	u
WDT Wake-up	PC + 2	u--u 00uu	u	0	0	u	u	u	u
Brown-out Reset	0000h	0--1 11u0	1	1	1	u	0	u	u
Interrupt Wake-up from SLEEP	PC + 2(1)	u--u 00uu	u	1	0	u	u	u	u

Legend: u = unchanged, x = unknown, - = unimplemented bit, read as '0'
Note 1: When the wake-up is due to an interrupt and the GIEH or GIEL bits are set, the PC is loaded with the interrupt vector (000008h or 000018h).

FIGURE 3-3: TIME-OUT SEQUENCE ON POWER-UP ($\overline{\text{MCLR}}$ TIED TO V_{DD})

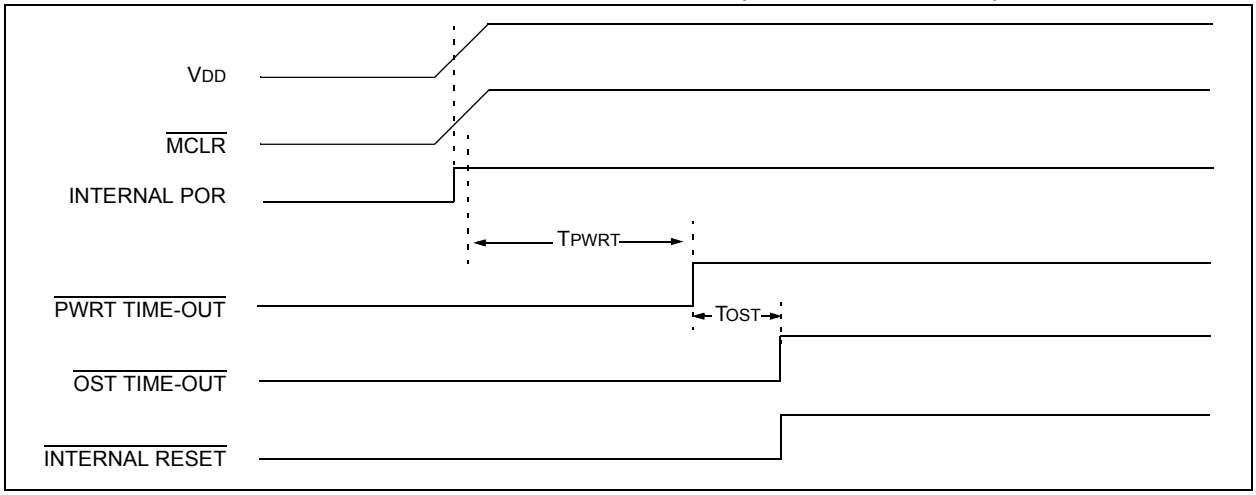

FIGURE 3-4: TIME-OUT SEQUENCE ON POWER-UP ($\overline{\text{MCLR}}$ NOT TIED TO V_{DD}): CASE 1

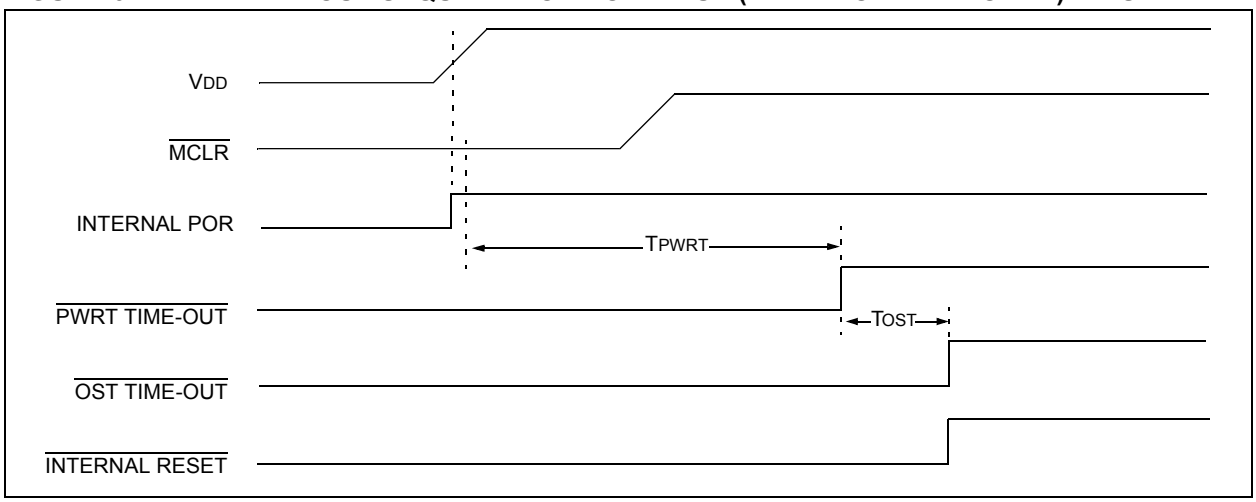

FIGURE 3-5: TIME-OUT SEQUENCE ON POWER-UP ($\overline{\text{MCLR}}$ NOT TIED TO V_{DD}): CASE 2

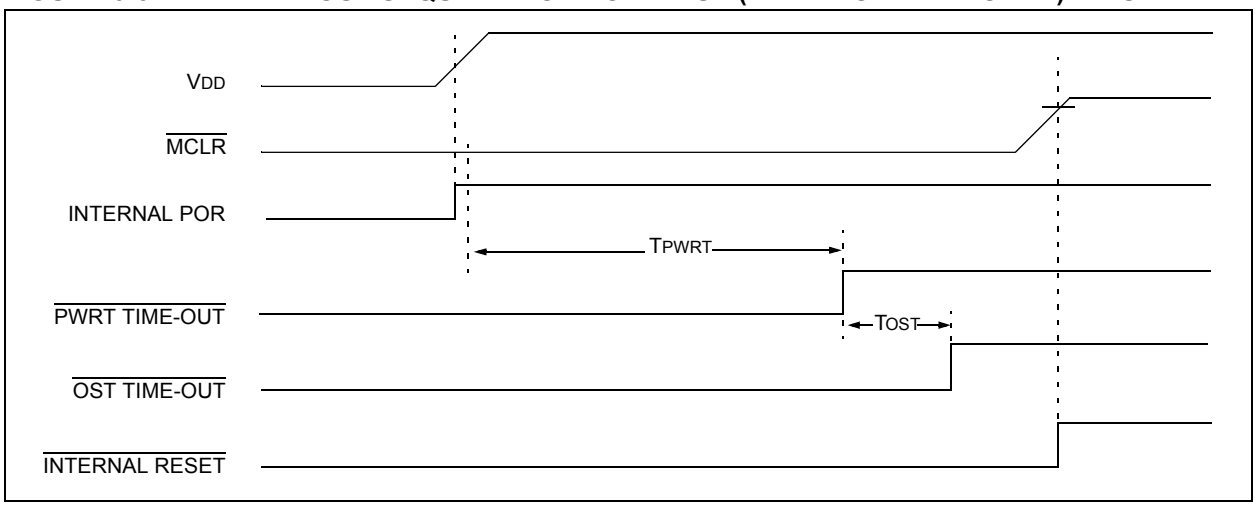

© 2003 Microchip Technology Inc.

FIGURE 3-6: SLOW RISE TIME ($\overline{MCLR}$ TIED TO V_{DD})

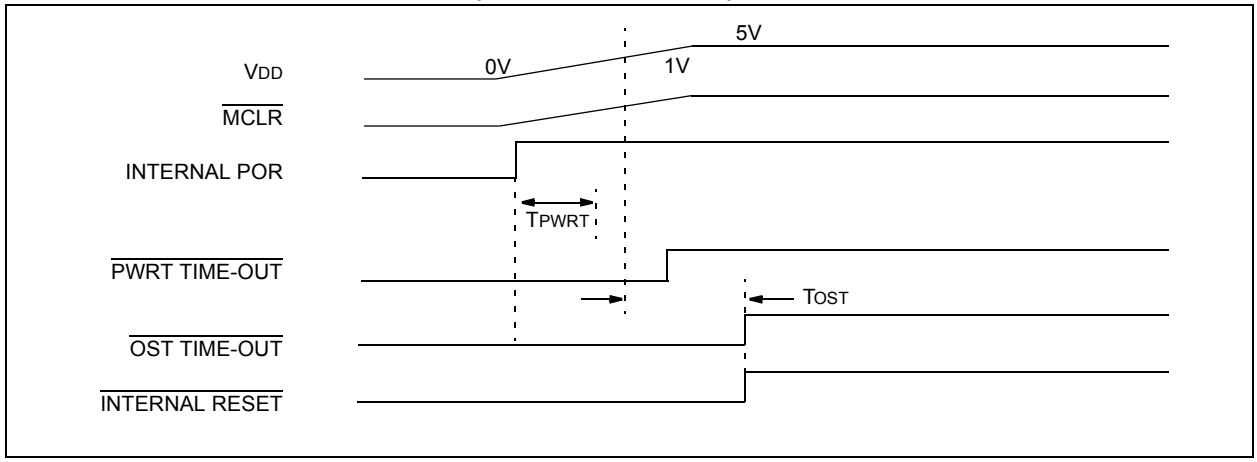

FIGURE 3-7: TIME-OUT SEQUENCE ON POR W/ PLL ENABLED ($\overline{MCLR}$ TIED TO V_{DD})

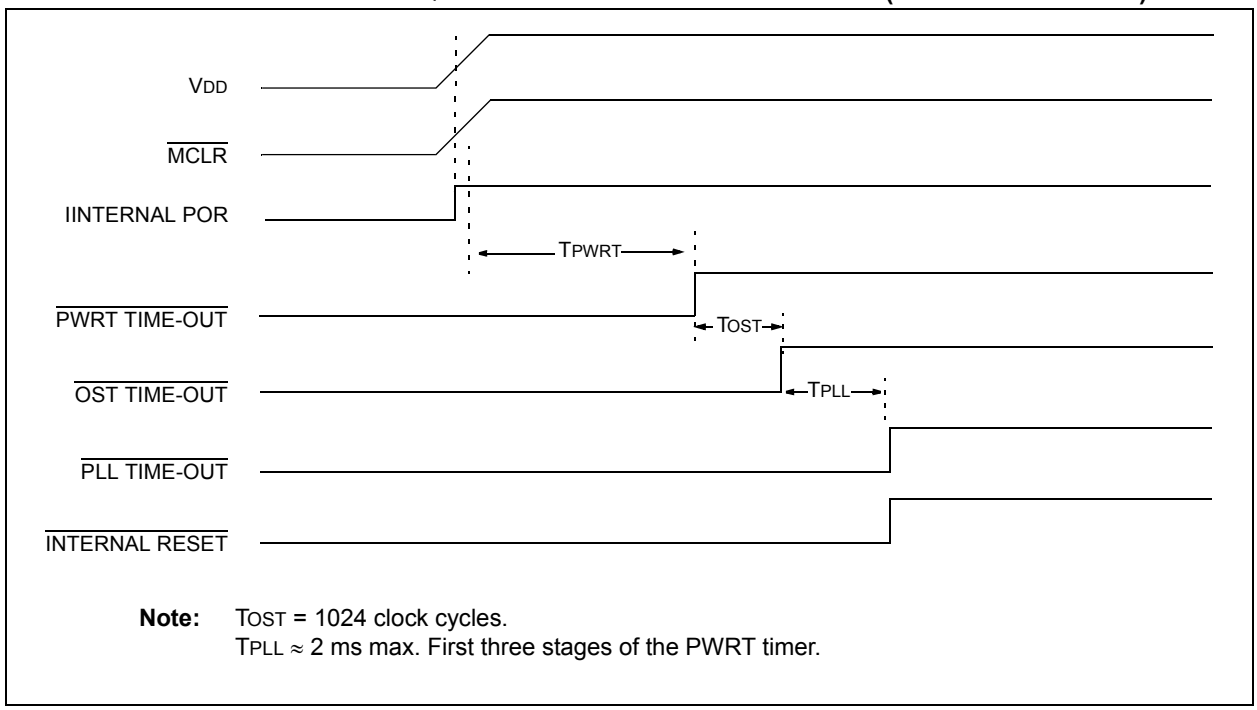

Note: TOST = 1024 clock cycles.
TPLL ≈ 2 ms max. First three stages of the PWRT timer.

TABLE 3-3: INITIALIZATION CONDITIONS FOR ALL REGISTERS

Register	Applicable Devices		Power-on Reset, Brown-out Reset	$\overline{\text{MCLR}}$ Reset WDT Reset RESET Instruction Stack Resets	Wake-up via WDT or Interrupt
TOSU	PIC18F2X8	PIC18F4X8	---0 0000	---0 0000	---0 uuuu(3)
TOSH	PIC18F2X8	PIC18F4X8	0000 0000	0000 0000	uuuu uuuu(3)
TOSL	PIC18F2X8	PIC18F4X8	0000 0000	0000 0000	uuuu uuuu(3)
STKPTR	PIC18F2X8	PIC18F4X8	00-0 0000	uu-0 0000	uu-u uuuu(3)
PCLATU	PIC18F2X8	PIC18F4X8	---0 0000	---0 0000	---u uuuu
PCLATH	PIC18F2X8	PIC18F4X8	0000 0000	0000 0000	uuuu uuuu
PCL	PIC18F2X8	PIC18F4X8	0000 0000	0000 0000	PC + 2(2)
TBLPTRU	PIC18F2X8	PIC18F4X8	--00 0000	--00 0000	--uu uuuu
TBLPTRH	PIC18F2X8	PIC18F4X8	0000 0000	0000 0000	uuuu uuuu
TBLPTRL	PIC18F2X8	PIC18F4X8	0000 0000	0000 0000	uuuu uuuu
TABLAT	PIC18F2X8	PIC18F4X8	0000 0000	0000 0000	uuuu uuuu
PRODH	PIC18F2X8	PIC18F4X8	xxxx xxxx	uuuu uuuu	uuuu uuuu
PRODL	PIC18F2X8	PIC18F4X8	xxxx xxxx	uuuu uuuu	uuuu uuuu
INTCON	PIC18F2X8	PIC18F4X8	0000 000x	0000 000u	uuuu uuuu(1)
INTCON2	PIC18F2X8	PIC18F4X8	111- -1-1	111- -1-1	uuuu -u-u(1)
INTCON3	PIC18F2X8	PIC18F4X8	11-- 0-00	11-- 0-00	uu-u u-uu(1)
INDF0	PIC18F2X8	PIC18F4X8	N/A	N/A	N/A
POSTINC0	PIC18F2X8	PIC18F4X8	N/A	N/A	N/A
POSTDEC0	PIC18F2X8	PIC18F4X8	N/A	N/A	N/A
PREINC0	PIC18F2X8	PIC18F4X8	N/A	N/A	N/A
PLUSW0	PIC18F2X8	PIC18F4X8	N/A	N/A	N/A
FSR0H	PIC18F2X8	PIC18F4X8	---- 0000	---- 0000	---- uuuu
FSR0L	PIC18F2X8	PIC18F4X8	xxxx xxxx	uuuu uuuu	uuuu uuuu
WREG	PIC18F2X8	PIC18F4X8	xxxx xxxx	uuuu uuuu	uuuu uuuu
INDF1	PIC18F2X8	PIC18F4X8	N/A	N/A	N/A
POSTINC1	PIC18F2X8	PIC18F4X8	N/A	N/A	N/A
POSTDEC1	PIC18F2X8	PIC18F4X8	N/A	N/A	N/A
PREINC1	PIC18F2X8	PIC18F4X8	N/A	N/A	N/A
PLUSW1	PIC18F2X8	PIC18F4X8	N/A	N/A	N/A

Legend: u = unchanged, x = unknown, - = unimplemented bit, read as '0', q = value depends on condition. Shaded cells indicate conditions do not apply for the designated device.

Note 1: One or more bits in the INTCONx or PIRx registers will be affected (to cause wake-up).

2: When the wake-up is due to an interrupt and the GIEL or GIEH bit is set, the PC is loaded with the interrupt vector (0008h or 0018h).

3: When the wake-up is due to an interrupt and the GIEL or GIEH bit is set, the TOSU, TOSH and TOSL are updated with the current value of the PC. The STKPTR is modified to point to the next location in the hardware stack.

4: See Table 3-2 for RESET value for specific condition.

5: Bit 6 of PORTA, LATA, and TRISA are enabled in ECIO and RCIO Oscillator modes only. In all other Oscillator modes, they are disabled and read '0'.

6: Values for CANSTAT also apply to its other instances (CANSTATRO1 through CANSTATRO4).

© 2003 Microchip Technology Inc.

TABLE 3-3: INITIALIZATION CONDITIONS FOR ALL REGISTERS (CONTINUED)

Register	Applicable Devices		Power-on Reset, Brown-out Reset	$\overline{\text{MCLR}}$ Reset WDT Reset RESET Instruction Stack Resets	Wake-up via WDT or Interrupt
FSR1H	PIC18F2X8	PIC18F4X8	---- 0000	---- 0000	---- uuuu
FSR1L	PIC18F2X8	PIC18F4X8	xxxx xxxx	uuuu uuuu	uuuu uuuu
BSR	PIC18F2X8	PIC18F4X8	---- 0000	---- 0000	---- uuuu
INDF2	PIC18F2X8	PIC18F4X8	N/A	N/A	N/A
POSTINC2	PIC18F2X8	PIC18F4X8	N/A	N/A	N/A
POSTDEC2	PIC18F2X8	PIC18F4X8	N/A	N/A	N/A
PREINC2	PIC18F2X8	PIC18F4X8	N/A	N/A	N/A
PLUSW2	PIC18F2X8	PIC18F4X8	N/A	N/A	N/A
FSR2H	PIC18F2X8	PIC18F4X8	---- 0000	---- 0000	---- uuuu
FSR2L	PIC18F2X8	PIC18F4X8	xxxx xxxx	uuuu uuuu	uuuu uuuu
STATUS	PIC18F2X8	PIC18F4X8	---x xxxx	---u uuuu	---u uuuu
TMR0H	PIC18F2X8	PIC18F4X8	xxxx xxxx	uuuu uuuu	uuuu uuuu
TMR0L	PIC18F2X8	PIC18F4X8	xxxx xxxx	uuuu uuuu	uuuu uuuu
T0CON	PIC18F2X8	PIC18F4X8	1111 1111	1111 1111	uuuu uuuu
OSCCON	PIC18F2X8	PIC18F4X8	---- ---0	---- ---0	---- ---u
LVDCON	PIC18F2X8	PIC18F4X8	--00 0101	--00 0101	--uu uuuu
WDTCON	PIC18F2X8	PIC18F4X8	---- ---0	---- ---0	---- ---u
RCON(4)	PIC18F2X8	PIC18F4X8	0--1 11q0	0--1 qquu	u--u qquu
TMR1H	PIC18F2X8	PIC18F4X8	xxxx xxxx	uuuu uuuu	uuuu uuuu
TMR1L	PIC18F2X8	PIC18F4X8	xxxx xxxx	uuuu uuuu	uuuu uuuu
T1CON	PIC18F2X8	PIC18F4X8	0-00 0000	u-uu uuuu	u-uu uuuu
TMR2	PIC18F2X8	PIC18F4X8	xxxx xxxx	uuuu uuuu	uuuu uuuu
PR2	PIC18F2X8	PIC18F4X8	1111 1111	1111 1111	1111 1111
T2CON	PIC18F2X8	PIC18F4X8	-000 0000	-000 0000	-uuu uuuu
SSPBUF	PIC18F2X8	PIC18F4X8	xxxx xxxx	uuuu uuuu	uuuu uuuu
SSPADD	PIC18F2X8	PIC18F4X8	0000 0000	0000 0000	uuuu uuuu
SSPSTAT	PIC18F2X8	PIC18F4X8	0000 0000	0000 0000	uuuu uuuu
SSPCON1	PIC18F2X8	PIC18F4X8	0000 0000	0000 0000	uuuu uuuu
SSPCON2	PIC18F2X8	PIC18F4X8	0000 0000	0000 0000	uuuu uuuu

Legend: u = unchanged, x = unknown, - = unimplemented bit, read as '0', q = value depends on condition.
Shaded cells indicate conditions do not apply for the designated device.

Note 1: One or more bits in the INTCONx or PIRx registers will be affected (to cause wake-up).

2: When the wake-up is due to an interrupt and the GIEL or GIEH bit is set, the PC is loaded with the interrupt vector (0008h or 0018h).

3: When the wake-up is due to an interrupt and the GIEL or GIEH bit is set, the TOSU, TOSH and TOSL are updated with the current value of the PC. The STKPTR is modified to point to the next location in the hardware stack.

4: See Table 3-2 for RESET value for specific condition.

5: Bit 6 of PORTA, LATA, and TRISA are enabled in ECIO and RCIO Oscillator modes only. In all other Oscillator modes, they are disabled and read '0'.

6: Values for CANSTAT also apply to its other instances (CANSTATRO1 through CANSTATRO4).

TABLE 3-3: INITIALIZATION CONDITIONS FOR ALL REGISTERS (CONTINUED)

Register	Applicable Devices		Power-on Reset, Brown-out Reset	$\overline{\text{MCLR}}$ Reset WDT Reset RESET Instruction Stack Resets	Wake-up via WDT or Interrupt
ADRESH	PIC18F2X8	PIC18F4X8	xxxx xxxx	uuuu uuuu	uuuu uuuu
ADRESL	PIC18F2X8	PIC18F4X8	xxxx xxxx	uuuu uuuu	uuuu uuuu
ADCON0	PIC18F2X8	PIC18F4X8	0000 00-0	0000 00-0	uuuu uu-u
ADCON1	PIC18F2X8	PIC18F4X8	00-- 0000	00-- 0000	uu-- uuuu
CCPR1H	PIC18F2X8	PIC18F4X8	xxxx xxxx	uuuu uuuu	uuuu uuuu
CCPR1L	PIC18F2X8	PIC18F4X8	xxxx xxxx	uuuu uuuu	uuuu uuuu
CCP1CON	PIC18F2X8	PIC18F4X8	--00 0000	--00 0000	--uu uuuu
ECCPR1H	PIC18F2X8	PIC18F4X8	xxxx xxxx	uuuu uuuu	uuuu uuuu
ECCPR1L	PIC18F2X8	PIC18F4X8	xxxx xxxx	uuuu uuuu	uuuu uuuu
ECCP1CON	PIC18F2X8	PIC18F4X8	0000 0000	0000 0000	0000 0000
ECCP1DEL	PIC18F2X8	PIC18F4X8	0000 0000	0000 0000	0000 0000
ECCPAS	PIC18F2X8	PIC18F4X8	0000 0000	0000 0000	0000 0000
CVRCON	PIC18F2X8	PIC18F4X8	0000 0000	0000 0000	uuuu uuuu
CMCON	PIC18F2X8	PIC18F4X8	0000 0000	0000 0000	uuuu uuuu
TMR3H	PIC18F2X8	PIC18F4X8	xxxx xxxx	uuuu uuuu	uuuu uuuu
TMR3L	PIC18F2X8	PIC18F4X8	xxxx xxxx	uuuu uuuu	uuuu uuuu
T3CON	PIC18F2X8	PIC18F4X8	0000 0000	uuuu uuuu	uuuu uuuu
SPBRG	PIC18F2X8	PIC18F4X8	xxxx xxxx	uuuu uuuu	uuuu uuuu
RCREG	PIC18F2X8	PIC18F4X8	xxxx xxxx	uuuu uuuu	uuuu uuuu
TXREG	PIC18F2X8	PIC18F4X8	xxxx xxxx	uuuu uuuu	uuuu uuuu
TXSTA	PIC18F2X8	PIC18F4X8	0000 -01x	0000 -01u	uuuu -uuu
RCSTA	PIC18F2X8	PIC18F4X8	0000 000x	0000 000u	uuuu uuuu
EEADR	PIC18F2X8	PIC18F4X8	xxxx xxxx	uuuu uuuu	uuuu uuuu
EEDATA	PIC18F2X8	PIC18F4X8	xxxx xxxx	uuuu uuuu	uuuu uuuu
EECON2	PIC18F2X8	PIC18F4X8	xxxx xxxx	uuuu uuuu	uuuu uuuu
EECON1	PIC18F2X8	PIC18F4X8	xx-0 x000	uu-0 u000	uu-0 u000
IPR3	PIC18F2X8	PIC18F4X8	1111 1111	1111 1111	uuuu uuuu
PIR3	PIC18F2X8	PIC18F4X8	0000 0000	0000 0000	uuuu uuuu
PIE3	PIC18F2X8	PIC18F4X8	0000 0000	0000 0000	uuuu uuuu

Legend: u = unchanged, x = unknown, - = unimplemented bit, read as '0', q = value depends on condition. Shaded cells indicate conditions do not apply for the designated device.

Note 1: One or more bits in the INTCONx or PIRx registers will be affected (to cause wake-up).

2: When the wake-up is due to an interrupt and the GIEL or GIEH bit is set, the PC is loaded with the interrupt vector (0008h or 0018h).

3: When the wake-up is due to an interrupt and the GIEL or GIEH bit is set, the TOSU, TOSH and TOSL are updated with the current value of the PC. The STKPTR is modified to point to the next location in the hardware stack.

4: See Table 3-2 for RESET value for specific condition.

5: Bit 6 of PORTA, LATA, and TRISA are enabled in ECIO and RCIO Oscillator modes only. In all other Oscillator modes, they are disabled and read ‘0’.

6: Values for CANSTAT also apply to its other instances (CANSTATRO1 through CANSTATRO4).

© 2003 Microchip Technology Inc.

TABLE 3-3: INITIALIZATION CONDITIONS FOR ALL REGISTERS (CONTINUED)

Register	Applicable Devices		Power-on Reset, Brown-out Reset	$\overline{\text{MCLR}}$ Reset WDT Reset RESET Instruction Stack Resets	Wake-up via WDT or Interrupt
IPR2	PIC18F2X8	PIC18F4X8	-1-1 1111	-1-1 1111	-u-u uuuu
PIR2	PIC18F2X8	PIC18F4X8	-0-0 0000	-0-0 0000	-u-u uuuu(1)
PIE2	PIC18F2X8	PIC18F4X8	-0-0 0000	-0-0 0000	-u-u uuuu
IPR1	PIC18F2X8	PIC18F4X8	1111 1111	1111 1111	uuuu uuuu
PIR1	PIC18F2X8	PIC18F4X8	0000 0000	0000 0000	uuuu uuuu(1)
PIE1	PIC18F2X8	PIC18F4X8	0000 0000	0000 0000	uuuu uuuu
TRISE	PIC18F2X8	PIC18F4X8	0000 -111	0000 -111	uuuu -uuu
TRISD	PIC18F2X8	PIC18F4X8	1111 1111	1111 1111	uuuu uuuu
TRISC	PIC18F2X8	PIC18F4X8	1111 1111	1111 1111	uuuu uuuu
TRISB	PIC18F2X8	PIC18F4X8	1111 1111	1111 1111	uuuu uuuu
TRISA(5)	PIC18F2X8	PIC18F4X8	-111 1111(5)	-111 1111(5)	-uuu uuuu(5)
LATE	PIC18F2X8	PIC18F4X8	---- -xxx	---- -uuu	---- -uuu
LATD	PIC18F2X8	PIC18F4X8	xxxx xxxx	uuuu uuuu	uuuu uuuu
LATC	PIC18F2X8	PIC18F4X8	xxxx xxxx	uuuu uuuu	uuuu uuuu
LATB	PIC18F2X8	PIC18F4X8	xxxx xxxx	uuuu uuuu	uuuu uuuu
LATA(5)	PIC18F2X8	PIC18F4X8	-xxx xxxx(5)	-uuu uuuu(5)	-uuu uuuu(5)
PORTE	PIC18F2X8	PIC18F4X8	---- -xxx	---- -000	---- -uuu
PORTD	PIC18F2X8	PIC18F4X8	xxxx xxxx	uuuu uuuu	uuuu uuuu
PORTC	PIC18F2X8	PIC18F4X8	xxxx xxxx	uuuu uuuu	uuuu uuuu
PORTB	PIC18F2X8	PIC18F4X8	xxxx xxxx	uuuu uuuu	uuuu uuuu
PORTA(5)	PIC18F2X8	PIC18F4X8	-x0x 0000(5)	-u0u 0000(5)	-uuu uuuu(5)
TXERRCNT	PIC18F2X8	PIC18F4X8	0000 0000	0000 0000	uuuu uuuu
RXERRCNT	PIC18F2X8	PIC18F4X8	0000 0000	0000 0000	uuuu uuuu
COMSTAT	PIC18F2X8	PIC18F4X8	0000 0000	0000 0000	uuuu uuuu
CIOCON	PIC18F2X8	PIC18F4X8	1000 ----	1000 ----	uuuu ----
BRGCON3	PIC18F2X8	PIC18F4X8	-0-- -000	-0-- -000	-u-- -uuu
BRGCON2	PIC18F2X8	PIC18F4X8	0000 0000	0000 0000	uuuu uuuu
BRGCON1	PIC18F2X8	PIC18F4X8	0000 0000	0000 0000	uuuu uuuu
CANCON	PIC18F2X8	PIC18F4X8	xxxx xxx-	uuuu uuu-	uuuu uuu-
CANSTAT(6)	PIC18F2X8	PIC18F4X8	xxx- xxx-	uuu- uuu-	uuu- uuu-

Legend: u = unchanged, x = unknown, - = unimplemented bit, read as '0', q = value depends on condition. Shaded cells indicate conditions do not apply for the designated device.

Note 1: One or more bits in the INTCONx or PIRx registers will be affected (to cause wake-up).

2: When the wake-up is due to an interrupt and the GIEL or GIEH bit is set, the PC is loaded with the interrupt vector (0008h or 0018h).

3: When the wake-up is due to an interrupt and the GIEL or GIEH bit is set, the TOSU, TOSH and TOSL are updated with the current value of the PC. The STKPTR is modified to point to the next location in the hardware stack.

4: See Table 3-2 for RESET value for specific condition.

5: Bit 6 of PORTA, LATA, and TRISA are enabled in ECIO and RCIO Oscillator modes only. In all other Oscillator modes, they are disabled and read '0'.

6: Values for CANSTAT also apply to its other instances (CANSTATRO1 through CANSTATRO4).

TABLE 3-3: INITIALIZATION CONDITIONS FOR ALL REGISTERS (CONTINUED)

Register	Applicable Devices		Power-on Reset, Brown-out Reset	$\overline{\text{MCLR}}$ Reset WDT Reset RESET Instruction Stack Resets	Wake-up via WDT or Interrupt
RXB0D7	PIC18F2X8	PIC18F4X8	xxxx xxxx	uuuu uuuu	uuuu uuuu
RXB0D6	PIC18F2X8	PIC18F4X8	xxxx xxxx	uuuu uuuu	uuuu uuuu
RXB0D5	PIC18F2X8	PIC18F4X8	xxxx xxxx	uuuu uuuu	uuuu uuuu
RXB0D4	PIC18F2X8	PIC18F4X8	xxxx xxxx	uuuu uuuu	uuuu uuuu
RXB0D3	PIC18F2X8	PIC18F4X8	xxxx xxxx	uuuu uuuu	uuuu uuuu
RXB0D2	PIC18F2X8	PIC18F4X8	xxxx xxxx	uuuu uuuu	uuuu uuuu
RXB0D1	PIC18F2X8	PIC18F4X8	xxxx xxxx	uuuu uuuu	uuuu uuuu
RXB0D0	PIC18F2X8	PIC18F4X8	xxxx xxxx	uuuu uuuu	uuuu uuuu
RXB0DLC	PIC18F2X8	PIC18F4X8	0xxx xxxx	0uuu uuuu	uuuu uuuu
RXB0EIDL	PIC18F2X8	PIC18F4X8	xxxx xxxx	uuuu uuuu	uuuu uuuu
RXB0EIDH	PIC18F2X8	PIC18F4X8	xxxx xxxx	uuuu uuuu	uuuu uuuu
RXB0SIDL	PIC18F2X8	PIC18F4X8	xxxx x-xx	uuuu u-uu	uuuu u-uu
RXB0SIDH	PIC18F2X8	PIC18F4X8	xxxx xxxx	uuuu uuuu	uuuu uuuu
RXB0CON	PIC18F2X8	PIC18F4X8	000- 0000	000- 0000	uuu- uuuu
RXB1D7	PIC18F2X8	PIC18F4X8	xxxx xxxx	uuuu uuuu	uuuu uuuu
RXB1D6	PIC18F2X8	PIC18F4X8	xxxx xxxx	uuuu uuuu	uuuu uuuu
RXB1D5	PIC18F2X8	PIC18F4X8	xxxx xxxx	uuuu uuuu	uuuu uuuu
RXB1D4	PIC18F2X8	PIC18F4X8	xxxx xxxx	uuuu uuuu	uuuu uuuu
RXB1D3	PIC18F2X8	PIC18F4X8	xxxx xxxx	uuuu uuuu	uuuu uuuu
RXB1D2	PIC18F2X8	PIC18F4X8	xxxx xxxx	uuuu uuuu	uuuu uuuu
RXB1D1	PIC18F2X8	PIC18F4X8	xxxx xxxx	uuuu uuuu	uuuu uuuu
RXB1D0	PIC18F2X8	PIC18F4X8	xxxx xxxx	uuuu uuuu	uuuu uuuu
RXB1DLC	PIC18F2X8	PIC18F4X8	0xxx xxxx	0uuu uuuu	uuuu uuuu
RXB1EIDL	PIC18F2X8	PIC18F4X8	xxxx xxxx	uuuu uuuu	uuuu uuuu
RXB1EIDH	PIC18F2X8	PIC18F4X8	xxxx xxxx	uuuu uuuu	uuuu uuuu
RXB1SIDL	PIC18F2X8	PIC18F4X8	xxxx x0xx	uuuu u0uu	uuuu uuuu
RXB1SIDH	PIC18F2X8	PIC18F4X8	xxxx xxxx	uuuu uuuu	uuuu uuuu
RXB1CON	PIC18F2X8	PIC18F4X8	0000 0000	0000 0000	uuuu uuuu
TXB0D7	PIC18F2X8	PIC18F4X8	xxxx xxxx	uuuu uuuu	uuuu uuuu
TXB0D6	PIC18F2X8	PIC18F4X8	xxxx xxxx	uuuu uuuu	uuuu uuuu
TXB0D5	PIC18F2X8	PIC18F4X8	xxxx xxxx	uuuu uuuu	uuuu uuuu
TXB0D4	PIC18F2X8	PIC18F4X8	xxxx xxxx	uuuu uuuu	uuuu uuuu
TXB0D3	PIC18F2X8	PIC18F4X8	xxxx xxxx	uuuu uuuu	uuuu uuuu
TXB0D2	PIC18F2X8	PIC18F4X8	xxxx xxxx	uuuu uuuu	uuuu uuuu
TXB0D1	PIC18F2X8	PIC18F4X8	xxxx xxxx	uuuu uuuu	uuuu uuuu
TXB0D0	PIC18F2X8	PIC18F4X8	xxxx xxxx	uuuu uuuu	uuuu uuuu

Legend: u = unchanged, x = unknown, - = unimplemented bit, read as '0', q = value depends on condition. Shaded cells indicate conditions do not apply for the designated device.

Note 1: One or more bits in the INTCONx or PIRx registers will be affected (to cause wake-up).

2: When the wake-up is due to an interrupt and the GIEL or GIEH bit is set, the PC is loaded with the interrupt vector (0008h or 0018h).

3: When the wake-up is due to an interrupt and the GIEL or GIEH bit is set, the TOSU, TOSH and TOSL are updated with the current value of the PC. The STKPTR is modified to point to the next location in the hardware stack.

4: See Table 3-2 for RESET value for specific condition.

5: Bit 6 of PORTA, LATA, and TRISA are enabled in ECIO and RCIO Oscillator modes only. In all other Oscillator modes, they are disabled and read '0'.

6: Values for CANSTAT also apply to its other instances (CANSTATRO1 through CANSTATRO4).

© 2003 Microchip Technology Inc.

TABLE 3-3: INITIALIZATION CONDITIONS FOR ALL REGISTERS (CONTINUED)

Register	Applicable Devices		Power-on Reset, Brown-out Reset	$\overline{\text{MCLR}}$ Reset WDT Reset RESET Instruction Stack Resets	Wake-up via WDT or Interrupt
TXB0DLC	PIC18F2X8	PIC18F4X8	0x00 xxxx	0u00 uuuu	uuuu uuuu
TXB0EIDL	PIC18F2X8	PIC18F4X8	xxxx xxxx	uuuu uuuu	uuuu uuuu
TXB0EIDH	PIC18F2X8	PIC18F4X8	xxxx xxxx	uuuu uuuu	uuuu uuuu
TXB0SIDL	PIC18F2X8	PIC18F4X8	xxx0 x0xx	uuu0 u0uu	uuuu uuuu
TXB0SIDH	PIC18F2X8	PIC18F4X8	xxxx xxxx	uuuu uuuu	uuuu uuuu
TXB0CON	PIC18F2X8	PIC18F4X8	0000 0000	0000 0000	uuuu uuuu
TXB1D7	PIC18F2X8	PIC18F4X8	xxxx xxxx	uuuu uuuu	uuuu uuuu
TXB1D6	PIC18F2X8	PIC18F4X8	xxxx xxxx	uuuu uuuu	uuuu uuuu
TXB1D5	PIC18F2X8	PIC18F4X8	xxxx xxxx	uuuu uuuu	uuuu uuuu
TXB1D4	PIC18F2X8	PIC18F4X8	xxxx xxxx	uuuu uuuu	uuuu uuuu
TXB1D3	PIC18F2X8	PIC18F4X8	xxxx xxxx	uuuu uuuu	uuuu uuuu
TXB1D2	PIC18F2X8	PIC18F4X8	xxxx xxxx	uuuu uuuu	uuuu uuuu
TXB1D1	PIC18F2X8	PIC18F4X8	xxxx xxxx	uuuu uuuu	uuuu uuuu
TXB1D0	PIC18F2X8	PIC18F4X8	xxxx xxxx	uuuu uuuu	uuuu uuuu
TXB1DLC	PIC18F2X8	PIC18F4X8	0x00 xxxx	0u00 uuuu	uuuu uuuu
TXB1EIDL	PIC18F2X8	PIC18F4X8	xxxx xxxx	uuuu uuuu	uuuu uuuu
TXB1EIDH	PIC18F2X8	PIC18F4X8	xxxx xxxx	uuuu uuuu	uuuu uuuu
TXB1SIDL	PIC18F2X8	PIC18F4X8	xxx0 x0xx	uuu0 u0uu	uuuu uuuu
TXB1SIDH	PIC18F2X8	PIC18F4X8	xxxx xxxx	uuuu uuuu	uuuu uuuu
TXB1CON	PIC18F2X8	PIC18F4X8	0000 0000	0000 0000	uuuu uuuu
TXB2D7	PIC18F2X8	PIC18F4X8	xxxx xxxx	uuuu uuuu	uuuu uuuu
TXB2D6	PIC18F2X8	PIC18F4X8	xxxx xxxx	uuuu uuuu	uuuu uuuu
TXB2D5	PIC18F2X8	PIC18F4X8	xxxx xxxx	uuuu uuuu	uuuu uuuu
TXB2D4	PIC18F2X8	PIC18F4X8	xxxx xxxx	uuuu uuuu	uuuu uuuu
TXB2D3	PIC18F2X8	PIC18F4X8	xxxx xxxx	uuuu uuuu	uuuu uuuu
TXB2D2	PIC18F2X8	PIC18F4X8	xxxx xxxx	uuuu uuuu	uuuu uuuu
TXB2D1	PIC18F2X8	PIC18F4X8	xxxx xxxx	uuuu uuuu	uuuu uuuu
TXB2D0	PIC18F2X8	PIC18F4X8	xxxx xxxx	uuuu uuuu	uuuu uuuu
TXB2DLC	PIC18F2X8	PIC18F4X8	0x00 xxxx	0u00 uuuu	uuuu uuuu
TXB2EIDL	PIC18F2X8	PIC18F4X8	xxxx xxxx	uuuu uuuu	uuuu uuuu
TXB2EIDH	PIC18F2X8	PIC18F4X8	xxxx xxxx	uuuu uuuu	uuuu uuuu
TXB2SIDL	PIC18F2X8	PIC18F4X8	xxx0 x0xx	uuu0 u0uu	uuuu uuuu
TXB2SIDH	PIC18F2X8	PIC18F4X8	xxxx xxxx	uuuu uuuu	uuuu uuuu
TXB2CON	PIC18F2X8	PIC18F4X8	0000 0000	0000 0000	uuuu uuuu

Legend: u = unchanged, x = unknown, - = unimplemented bit, read as '0', q = value depends on condition. Shaded cells indicate conditions do not apply for the designated device.

Note 1: One or more bits in the INTCONx or PIRx registers will be affected (to cause wake-up).

2: When the wake-up is due to an interrupt and the GIEL or GIEH bit is set, the PC is loaded with the interrupt vector (0008h or 0018h).

3: When the wake-up is due to an interrupt and the GIEL or GIEH bit is set, the TOSU, TOSH and TOSL are updated with the current value of the PC. The STKPTR is modified to point to the next location in the hardware stack.

4: See Table 3-2 for RESET value for specific condition.

5: Bit 6 of PORTA, LATA, and TRISA are enabled in ECIO and RCIO Oscillator modes only. In all other Oscillator modes, they are disabled and read '0'.

6: Values for CANSTAT also apply to its other instances (CANSTATRO1 through CANSTATRO4).

TABLE 3-3: INITIALIZATION CONDITIONS FOR ALL REGISTERS (CONTINUED)

Register	Applicable Devices		Power-on Reset, Brown-out Reset	$\overline{\text{MCLR}}$ Reset WDT Reset RESET Instruction Stack Resets	Wake-up via WDT or Interrupt
RXM1EIDL	PIC18F2X8	PIC18F4X8	xxxx xxxx	uuuu uuuu	uuuu uuuu
RXM1EIDH	PIC18F2X8	PIC18F4X8	xxxx xxxx	uuuu uuuu	uuuu uuuu
RXM1SIDL	PIC18F2X8	PIC18F4X8	xxx- --xx	uuu- --uu	uuu- --uu
RXM1SIDH	PIC18F2X8	PIC18F4X8	xxxx xxxx	uuuu uuuu	uuuu uuuu
RXM0EIDL	PIC18F2X8	PIC18F4X8	xxxx xxxx	uuuu uuuu	uuuu uuuu
RXM0EIDH	PIC18F2X8	PIC18F4X8	xxxx xxxx	uuuu uuuu	uuuu uuuu
RXM0SIDL	PIC18F2X8	PIC18F4X8	xxx- --xx	uuu- --uu	uuu- --uu
RXM0SIDH	PIC18F2X8	PIC18F4X8	xxxx xxxx	uuuu uuuu	uuuu uuuu
RXF5EIDL	PIC18F2X8	PIC18F4X8	xxxx xxxx	uuuu uuuu	uuuu uuuu
RXF5EIDH	PIC18F2X8	PIC18F4X8	xxxx xxxx	uuuu uuuu	uuuu uuuu
RXF5SIDL	PIC18F2X8	PIC18F4X8	xxx- x-xx	uuu- u-uu	uuu- u-uu
RXF5SIDH	PIC18F2X8	PIC18F4X8	xxxx xxxx	uuuu uuuu	uuuu uuuu
RXF4EIDL	PIC18F2X8	PIC18F4X8	xxxx xxxx	uuuu uuuu	uuuu uuuu
RXF4EIDH	PIC18F2X8	PIC18F4X8	xxxx xxxx	uuuu uuuu	uuuu uuuu
RXF4SIDL	PIC18F2X8	PIC18F4X8	xxx- x-xx	uuu- u-uu	uuu- u-uu
RXF4SIDH	PIC18F2X8	PIC18F4X8	xxxx xxxx	uuuu uuuu	uuuu uuuu
RXF3EIDL	PIC18F2X8	PIC18F4X8	xxxx xxxx	uuuu uuuu	uuuu uuuu
RXF3EIDH	PIC18F2X8	PIC18F4X8	xxxx xxxx	uuuu uuuu	uuuu uuuu
RXF3SIDL	PIC18F2X8	PIC18F4X8	xxx- x-xx	uuu- u-uu	uuu- u-uu
RXF3SIDH	PIC18F2X8	PIC18F4X8	xxxx xxxx	uuuu uuuu	uuuu uuuu
RXF2EIDL	PIC18F2X8	PIC18F4X8	xxxx xxxx	uuuu uuuu	uuuu uuuu
RXF2EIDH	PIC18F2X8	PIC18F4X8	xxxx xxxx	uuuu uuuu	uuuu uuuu
RXF2SIDL	PIC18F2X8	PIC18F4X8	xxx- x-xx	uuu- u-uu	uuu- u-uu
RXF2SIDH	PIC18F2X8	PIC18F4X8	xxxx xxxx	uuuu uuuu	uuuu uuuu
RXF1EIDL	PIC18F2X8	PIC18F4X8	xxxx xxxx	uuuu uuuu	uuuu uuuu
RXF1EIDH	PIC18F2X8	PIC18F4X8	xxxx xxxx	uuuu uuuu	uuuu uuuu
RXF1SIDL	PIC18F2X8	PIC18F4X8	xxx- x-xx	uuu- u-uu	uuu- u-uu
RXF1SIDH	PIC18F2X8	PIC18F4X8	xxxx xxxx	uuuu uuuu	uuuu uuuu
RXF0EIDL	PIC18F2X8	PIC18F4X8	xxxx xxxx	uuuu uuuu	uuuu uuuu
RXF0EIDH	PIC18F2X8	PIC18F4X8	xxxx xxxx	uuuu uuuu	uuuu uuuu
RXF0SIDL	PIC18F2X8	PIC18F4X8	xxx- x-xx	uuu- u-uu	uuu- u-uu
RXF0SIDH	PIC18F2X8	PIC18F4X8	xxxx xxxx	uuuu uuuu	uuuu uuuu

Legend: u = unchanged, x = unknown, - = unimplemented bit, read as '0', q = value depends on condition.
Shaded cells indicate conditions do not apply for the designated device.

Note 1: One or more bits in the INTCONx or PIRx registers will be affected (to cause wake-up).

2: When the wake-up is due to an interrupt and the GIEL or GIEH bit is set, the PC is loaded with the interrupt vector (0008h or 0018h).

3: When the wake-up is due to an interrupt and the GIEL or GIEH bit is set, the TOSU, TOSH and TOSL are updated with the current value of the PC. The STKPTR is modified to point to the next location in the hardware stack.

4: See Table 3-2 for RESET value for specific condition.

5: Bit 6 of PORTA, LATA, and TRISA are enabled in ECIO and RCIO Oscillator modes only. In all other Oscillator modes, they are disabled and read '0'.

6: Values for CANSTAT also apply to its other instances (CANSTATRO1 through CANSTATRO4).

© 2003 Microchip Technology Inc.

4.0 MEMORY ORGANIZATION

There are three memory blocks in Enhanced MCU devices. These memory blocks are:

- Enhanced FLASH Program Memory
- Data Memory
- EEPROM Data Memory

Data and program memory use separate busses, which allows concurrent access of these blocks. Additional detailed information on Data EEPROM and FLASH program memory is provided in Section 5.0 and Section 6.0, respectively.

4.1 Program Memory Organization

The PIC18F258/458 devices have a 21-bit program counter that is capable of addressing a 2-Mbyte program memory space.

The RESET vector address is at 0000h and the interrupt vector addresses are at 0008h and 0018h.

Figure 4-1 shows the diagram for program memory map and stack for the PIC18F248 and PIC18F448. Figure 4-2 shows the diagram for the program memory map and stack for the PIC18F258 and PIC18F458.

4.1.1 INTERNAL PROGRAM MEMORY OPERATION

The PIC18F258 and the PIC18F458 have 32 Kbytes of internal Enhanced FLASH program memory. This means that the PIC18F258 and the PIC18F458 can store up to 16K of single word instructions. The PIC18F248 and PIC18F448 have 16 Kbytes of Enhanced FLASH program memory. This translates into 8192 single word instructions, which can be stored in the program memory. Accessing a location between the physically implemented memory and the 2-Mbyte address will cause a read of all '0's (a `NOP` instruction).

FIGURE 4-1: PROGRAM MEMORY MAP AND STACK FOR PIC18F248/448

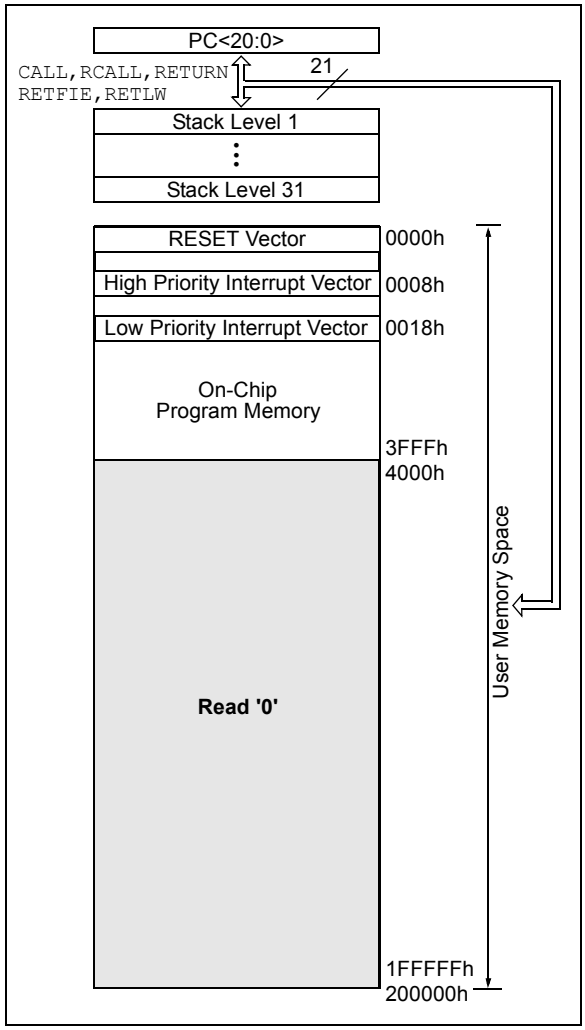

FIGURE 4-2: PROGRAM MEMORY MAP AND STACK FOR PIC18F258/458

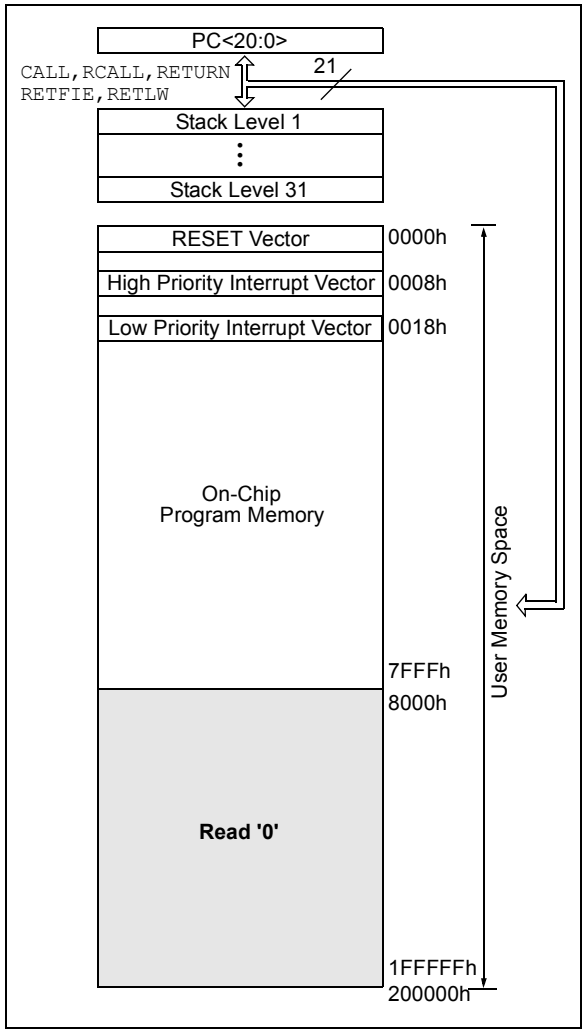

4.2 Return Address Stack

The return address stack allows any combination of up to 31 program calls and interrupts to occur. The PC (Program Counter) is pushed onto the stack when a PUSH, CALL or RCALL instruction is executed, or an interrupt is Acknowledged. The PC value is pulled off the stack on a RETURN, RETLW or a RETFIE instruction. PCLATU and PCLATH are not affected by any of the return instructions.

The stack operates as a 31-word by 21-bit stack memory and a 5-bit stack pointer, with the stack pointer initialized to 00000b after all RESETS. There is no RAM associated with stack pointer 00000b. This is only a RESET value. During a CALL type instruction, causing a push onto the stack, the stack pointer is first incremented and the RAM location pointed to by the stack pointer is written with the contents of the PC. During a RETURN type instruction, causing a pop from the stack, the contents of the RAM location indicated by the STKPTR is transferred to the PC and then the stack pointer is decremented.

The stack space is not part of either program or data space. The stack pointer is readable and writable, and the data on the top of the stack is readable and writable through SFR registers. Status bits indicate if the stack pointer is at or beyond the 31 levels provided.

4.2.1 TOP-OF-STACK ACCESS

The top of the stack is readable and writable. Three register locations, TOSU, TOSH and TOSL allow access to the contents of the stack location indicated by the STKPTR register. This allows users to implement a software stack, if necessary. After a CALL, RCALL or interrupt, the software can read the pushed value by reading the TOSU, TOSH and TOSL registers. These values can be placed on a user defined software stack. At return time, the software can replace the TOSU, TOSH and TOSL and do a return.

The user should disable the global interrupt enable bits during this time to prevent inadvertent stack operations.

4.2.2 RETURN STACK POINTER (STKPTR)

The STKPTR register contains the stack pointer value, the STKFUL (stack full) status bit, and the STKUNF (stack underflow) status bits. Register 4-1 shows the STKPTR register. The value of the stack pointer can be 0 through 31. The stack pointer increments when values are pushed onto the stack and decrements when values are popped off the stack. At RESET, the stack pointer value will be ‘0’. The user may read and write the stack pointer value. This feature can be used by a Real-Time Operating System for return stack maintenance.

After the PC is pushed onto the stack 31 times (without popping any values off the stack), the STKFUL bit is set. The STKFUL bit can only be cleared in software or by a POR.

The action that takes place when the stack becomes full depends on the state of the STVREN (Stack Overflow Reset Enable) configuration bit. Refer to Section 21.0 for a description of the device configuration bits. If STVREN is set (default), the 31st push will push the (PC + 2) value onto the stack, set the STKFUL bit, and reset the device. The STKFUL bit will remain set and the stack pointer will be set to ‘0’.

If STVREN is cleared, the STKFUL bit will be set on the 31st push and the stack pointer will increment to 31. The 32nd push will overwrite the 31st push (and so on), while STKPTR remains at 31.

When the stack has been popped enough times to unload the stack, the next pop will return a value of zero to the PC and sets the STKUNF bit, while the stack pointer remains at ‘0’. The STKUNF bit will remain set until cleared in software or a POR occurs.

Note:	Returning a value of zero to the PC on an underflow has the effect of vectoring the program to the RESET vector, where the stack conditions can be verified and appropriate actions can be taken.

© 2003 Microchip Technology Inc.

REGISTER 4-1: STKPTR: STACK POINTER REGISTER

R/C-0	R/C-0	U-0	R/W-0	R/W-0	R/W-0	R/W-0	R/W-0
STKFUL	STKUNF	—	SP4	SP3	SP2	SP1	SP0
bit 7							bit 0

bit 7 **STKFUL**: Stack Full Flag bit
1 = Stack became full or overflowed
0 = Stack has not become full or overflowed

bit 6 **STKUNF**: Stack Underflow Flag bit
1 = Stack underflow occurred
0 = Stack underflow did not occur

bit 5 **Unimplemented**: Read as '0'

bit 4-0 **SP4:SP0**: Stack Pointer Location bits

Note: Bit 7 and bit 6 need to be cleared following a stack underflow or a stack overflow.

Legend:			
R = Readable bit	W = Writable bit	U = Unimplemented bit, read as '0'	
- n = Value at POR	'1' = Bit is set	'0' = Bit is cleared	C = Clearable bit

FIGURE 4-3: RETURN ADDRESS STACK AND ASSOCIATED REGISTERS

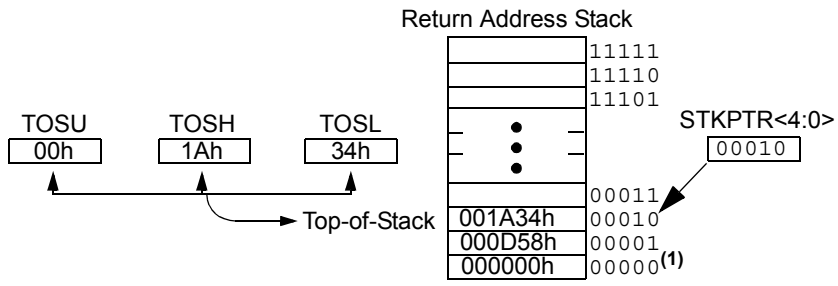

Note 1: No RAM associated with this address; always maintained '0's.

4.2.3 PUSH AND POP INSTRUCTIONS

Since the Top-of-Stack (TOS) is readable and writable, the ability to push values onto the stack and pull values off the stack without disturbing normal program execution is a desirable option. To push the current PC value onto the stack, a PUSH instruction can be executed. This will increment the stack pointer and load the current PC value onto the stack. TOSU, TOSH and TOSL can then be modified to place a return address on the stack.

The POP instruction discards the current TOS by decrementing the stack pointer. The previous value pushed onto the stack then becomes the TOS value.

4.2.4 STACK FULL/UNDERFLOW RESETS

These RESETS are enabled by programming the STVREN configuration bit. When the STVREN bit is disabled, a full or underflow condition will set the appropriate STKFUL or STKUNF bit, but not cause a device RESET. When the STVREN bit is enabled, a full or underflow condition will set the appropriate STKFUL or STKUNF bit and then cause a device RESET. The STKFUL or STKUNF bits are only cleared by the user software or a POR.

4.3 Fast Register Stack

A “fast return” option is available for interrupts and calls. A fast register stack is provided for the STATUS, WREG and BSR registers and is only one layer in depth. The stack is not readable or writable and is loaded with the current value of the corresponding register when the processor vectors for an interrupt. The values in the fast register stack are then loaded back into the working registers if the `fast return` instruction is used to return from the interrupt.

A low or high priority interrupt source will push values into the stack registers. If both low and high priority interrupts are enabled, the stack registers cannot be used reliably for low priority interrupts. If a high priority interrupt occurs while servicing a low priority interrupt, the stack register values stored by the low priority interrupt will be overwritten.

If high priority interrupts are not disabled during low priority interrupts, users must save the key registers in software during a low priority interrupt.

If no interrupts are used, the fast register stack can be used to restore the STATUS, WREG and BSR registers at the end of a subroutine call. To use the fast register stack for a subroutine call, a `fast call` instruction must be executed.

Example 4-1 shows a source code example that uses the fast register stack.

EXAMPLE 4-1: FAST REGISTER STACK CODE EXAMPLE

```
CALL SUB1, FAST    ;STATUS, WREG, BSR
                   ;SAVED IN FAST REGISTER
                   ;STACK
       •
       •
       •
SUB1   •
       •
       •
   RETURN FAST     ;RESTORE VALUES SAVED
                   ;IN FAST REGISTER STACK
```

4.4 PCL, PCLATH and PCLATU

The program counter (PC) specifies the address of the instruction to fetch for execution. The PC is 21-bits wide. The low byte is called the PCL register. This register is readable and writable. The high byte is called the PCH register. This register contains the PC<15:8> bits and is not directly readable or writable. Updates to the PCH register may be performed through the PCLATH register. The upper byte is called PCU. This register contains the PC<20:16> bits and is not directly readable or writable. Updates to the PCU register may be performed through the PCLATU register.

The PC addresses bytes in the program memory. To prevent the PC from becoming misaligned with word instructions, the LSb of PCL is fixed to a value of ‘0’. The PC increments by 2 to address sequential instructions in the program memory.

The `CALL, RCALL, GOTO` and program branch instructions write to the program counter directly. For these instructions, the contents of PCLATH and PCLATU are not transferred to the program counter.

The contents of PCLATH and PCLATU will be transferred to the program counter by an operation that writes PCL. Similarly, the upper two bytes of the program counter will be transferred to PCLATH and PCLATU by an operation that reads PCL. This is useful for computed offsets to the PC (see Section 4.8.1).

© 2003 Microchip Technology Inc.

4.5 Clocking Scheme/Instruction Cycle

The clock input (from OSC1) is internally divided by four to generate four non-overlapping quadrature clocks, namely Q1, Q2, Q3 and Q4. Internally, the program counter (PC) is incremented every Q1, the instruction is fetched from the program memory and latched into the instruction register in Q4. The instruction is decoded and executed during the following Q1 through Q4. The clocks and instruction execution flow are shown in Figure 4-4.

FIGURE 4-4: CLOCK/INSTRUCTION CYCLE

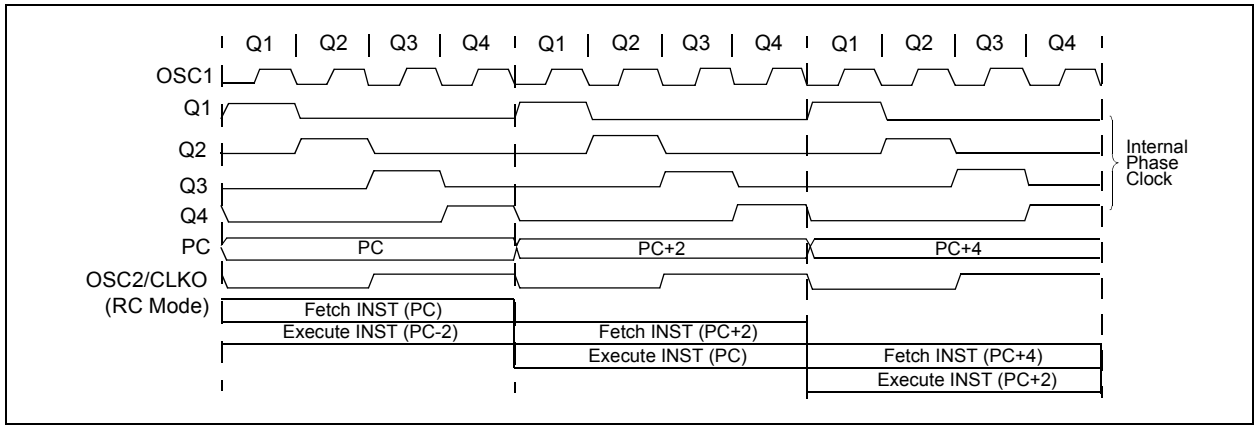

4.6 Instruction Flow/Pipelining

An “Instruction Cycle” consists of four Q cycles (Q1, Q2, Q3 and Q4). The instruction fetch and execute are pipelined such that fetch takes one instruction cycle, while decode and execute take another instruction cycle. However, due to the pipelining, each instruction effectively executes in one cycle. If an instruction causes the program counter to change (e.g., `GOTO`), two cycles are required to complete the instruction (Example 4-2).

A fetch cycle begins with the program counter (PC) incrementing in Q1.

In the execution cycle, the fetched instruction is latched into the “Instruction Register” (IR) in cycle Q1. This instruction is then decoded and executed during the Q2, Q3, and Q4 cycles. Data memory is read during Q2 (operand read) and written during Q4 (destination write).

4.7 Instructions in Program Memory

The program memory is addressed in bytes. Instructions are stored as two bytes or four bytes in program memory. The Least Significant Byte of an instruction word is always stored in a program memory location with an even address (LSB = `0`). Figure 4-3 shows an example of how instruction words are stored in the program memory. To maintain alignment with instruction boundaries, the PC increments in steps of 2 and the LSB will always read ‘0’ (see Section 4.4).

The `CALL` and `GOTO` instructions have an absolute program memory address embedded into the instruction. Since instructions are always stored on word boundaries, the data contained in the instruction is a word address. The word address is written to PC<20:1>, which accesses the desired byte address in program memory. Instruction #2 in Example 4-3 shows how the instruction “`GOTO 000006h`” is encoded in the program memory. Program branch instructions that encode a relative address offset operate in the same manner. The offset value stored in a branch instruction represents the number of single word instructions by which the PC will be offset. Section 25.0 provides further details of the instruction set.

EXAMPLE 4-2: INSTRUCTION PIPELINE FLOW

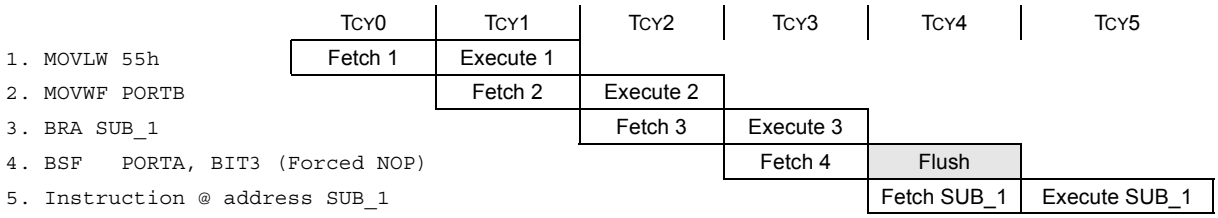

Note: All instructions are single cycle, except for any program branches. These take two cycles, since the fetch instruction is "flushed" from the pipeline while the new instruction is being fetched and then executed.

EXAMPLE 4-3: INSTRUCTIONS IN PROGRAM MEMORY

Instruction	Opcode	Memory	Address
—			000007h
MOVLW 055h	0E55h	55h	000008h
		0Eh	000009h
GOTO 000006h	0EF03h, 0F000h	03h	00000Ah
		0EFh	00000Bh
		00h	00000Ch
		0F0h	00000Dh
MOVFF 123h, 456h	0C123h, 0F456h	23h	00000Eh
		0C1h	00000Fh
		56h	000010h
		0F4h	000011h
—			000012h

© 2003 Microchip Technology Inc.

4.7.1 TWO-WORD INSTRUCTIONS

The PIC18FXX8 devices have 4 two-word instructions: MOVFF, CALL, GOTO and LFSR. The 4 Most Significant bits of the second word are set to '1's, and indicate a special NOP instruction. The lower 12 bits of the second word contain the data to be used by the instruction. If the first word of the instruction is executed, the data in the second word is accessed. If the second word of the instruction is executed by itself (first word was skipped), it will execute as a NOP. This action is necessary when the two-word instruction is preceded by a conditional instruction that changes the PC. A program example that demonstrates this concept is shown in Example 4-4. Refer to Section 25.0 for further details of the instruction set.

4.8 Lookup Tables

Lookup tables are implemented two ways. These are:

- Computed GOTO
- Table Reads

4.8.1 COMPUTED GOTO

A computed GOTO is accomplished by adding an offset to the program counter (ADDWF PCL).

A lookup table can be formed with an ADDWF PCL instruction and a group of RETLW 0xnn instructions. WREG is loaded with an offset into the table before executing a call to that table. The first instruction of the called routine is the ADDWF PCL instruction. The next instruction executed will be one of the RETLW 0xnn instructions that returns the value 0xnn to the calling function.

The offset value (value in WREG) specifies the number of bytes that the program counter should advance.

In this method, only one data byte may be stored in each instruction location and room on the return address stack is required.

Note 1: The LSb of PCL is fixed to a value of '0'. Hence, computed GOTO to an odd address is not possible.

2: The ADDWF PCL instruction does not update PCLATH/PCLATU. A read operation on PCL must be performed to update PCLATH and PCLATU.

4.8.2 TABLE READS/TABLE WRITES

A better method of storing data in program memory allows 2 bytes of data to be stored in each instruction location.

Lookup table data may be stored as 2 bytes per program word by using table reads and writes. The table pointer (TBLPTR) specifies the byte address and the table latch (TABLAT) contains the data that is read from, or written to, program memory. Data is transferred to/from program memory, one byte at a time.

A description of the Table Read/Table Write operation is shown in Section 6.1.

EXAMPLE 4-4: TWO-WORD INSTRUCTIONS

CASE 1:

Object Code	Source Code		
0110 0110 0000 0000	TSTFSZ	REG1	; is RAM location 0?
1100 0001 0010 0011	MOVFF	REG1, REG2	; No, execute 2-word instruction
1111 0100 0101 0110			; 2nd operand holds address of REG2
0010 0100 0000 0000	ADDWF	REG3	; continue code

CASE 2:

Object Code	Source Code		
0110 0110 0000 0000	TSTFSZ	REG1	; is RAM location 0?
1100 0001 0010 0011	MOVFF	REG1, REG2	; Yes
1111 0100 0101 0110			; 2nd operand becomes NOP
0010 0100 0000 0000	ADDWF	REG3	; continue code

4.9 Data Memory Organization

The data memory is implemented as static RAM. Each register in the data memory has a 12-bit address, allowing up to 4096 bytes of data memory. Figure 4-6 shows the data memory organization for the PIC18FXX8 devices.

The data memory map is divided into as many as 16 banks that contain 256 bytes each. The lower 4 bits of the Bank Select Register (BSR<3:0>) select which bank will be accessed. The upper 4 bits for the BSR are not implemented.

The data memory contains Special Function Registers (SFRs) and General Purpose Registers (GPRs). The SFRs are used for control and status of the controller and peripheral functions, while GPR's are used for data storage and scratch pad operations in the user's application. The SFR's start at the last location of Bank 15 (FFFh) and grow downwards. GPRs start at the first location of Bank 0 and grow upwards. Any read of an unimplemented location will read as '0's.

The entire data memory may be accessed directly, or indirectly. Direct addressing may require the use of the BSR register. Indirect addressing requires the use of the File Select Register (FSR). Each FSR holds a 12-bit address value that can be used to access any location in the Data Memory map without banking.

The instruction set and architecture allow operations across all banks. This may be accomplished by indirect addressing or by the use of the `MOVFF` instruction. The `MOVFF` instruction is a two-word/two-cycle instruction, that moves a value from one register to another.

To ensure that commonly used registers (SFRs and select GPRs) can be accessed in a single cycle, regardless of the current BSR values, an Access Bank is implemented. A segment of Bank 0 and a segment of Bank 15 comprise the Access RAM. Section 4.10 provides a detailed description of the Access RAM.

4.9.1 GENERAL PURPOSE REGISTER FILE

The register file can be accessed either directly, or indirectly. Indirect addressing operates through the File Select Registers (FSR). The operation of indirect addressing is shown in Section 4.12.

Enhanced MCU devices may have banked memory in the GPR area. GPRs are not initialized by a Power-on Reset and are unchanged on all other RESETS.

Data RAM is available for use as GPR registers by all instructions. Bank 15 (F00h to FFFh) contains SFRs. All other banks of data memory contain GPR registers, starting with Bank 0.

4.9.2 SPECIAL FUNCTION REGISTERS

The Special Function Registers (SFRs) are registers used by the CPU and Peripheral Modules for controlling the desired operation of the device. These registers are implemented as static RAM. A list of these registers is given in Table 4-1.

The SFRs can be classified into two sets: those associated with the "core" function and those related to the peripheral functions. Those registers related to the "core" are described in this section, while those related to the operation of the peripheral features are described in the section of that peripheral feature.

The SFRs are typically distributed among the peripherals whose functions they control.

The unused SFR locations will be unimplemented and read as '0's. See Table 4-1 for addresses for the SFRs.

© 2003 Microchip Technology Inc.

FIGURE 4-5: DATA MEMORY MAP FOR PIC18F248/448

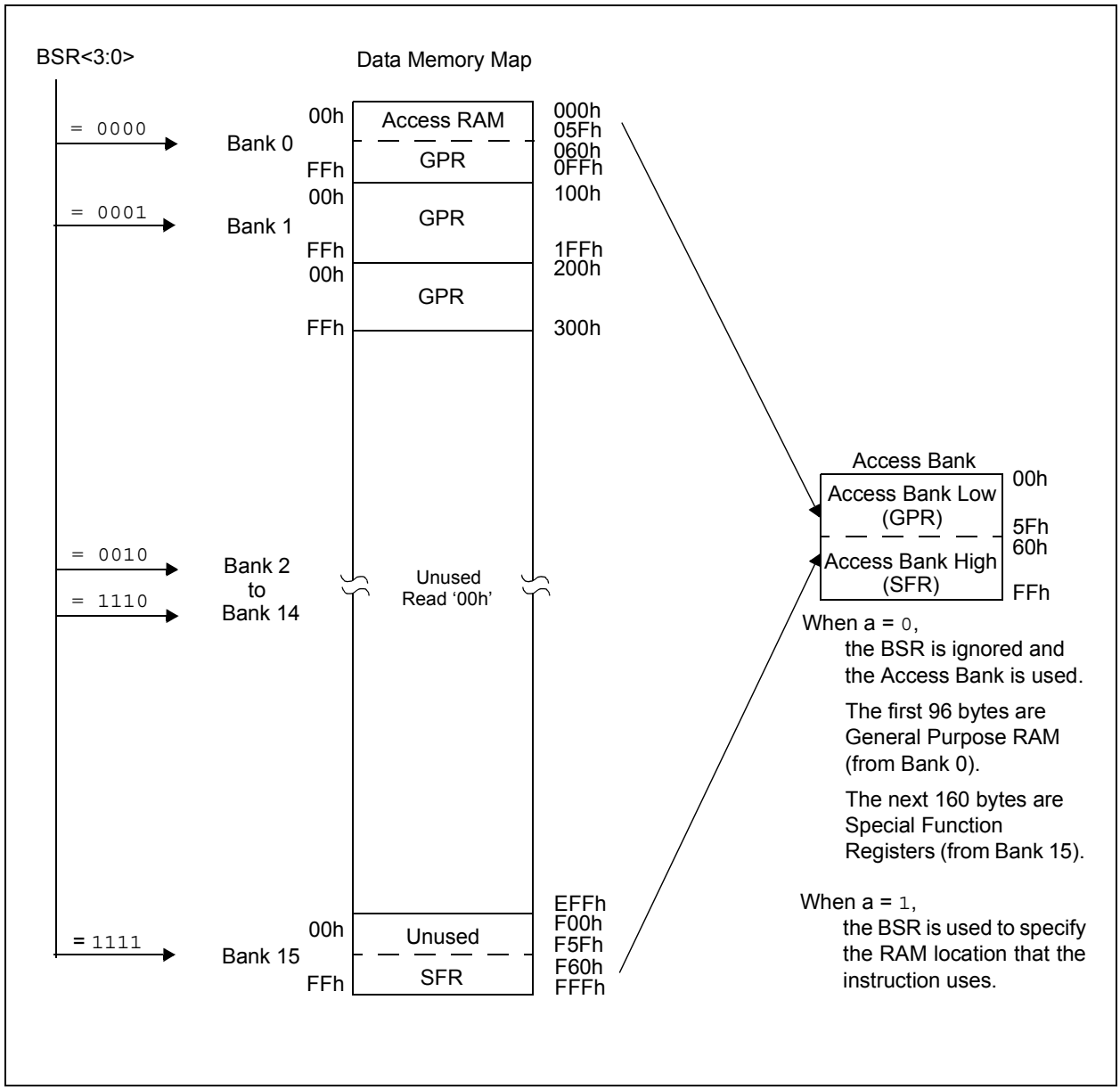

FIGURE 4-6: DATA MEMORY MAP FOR PIC18F258/458

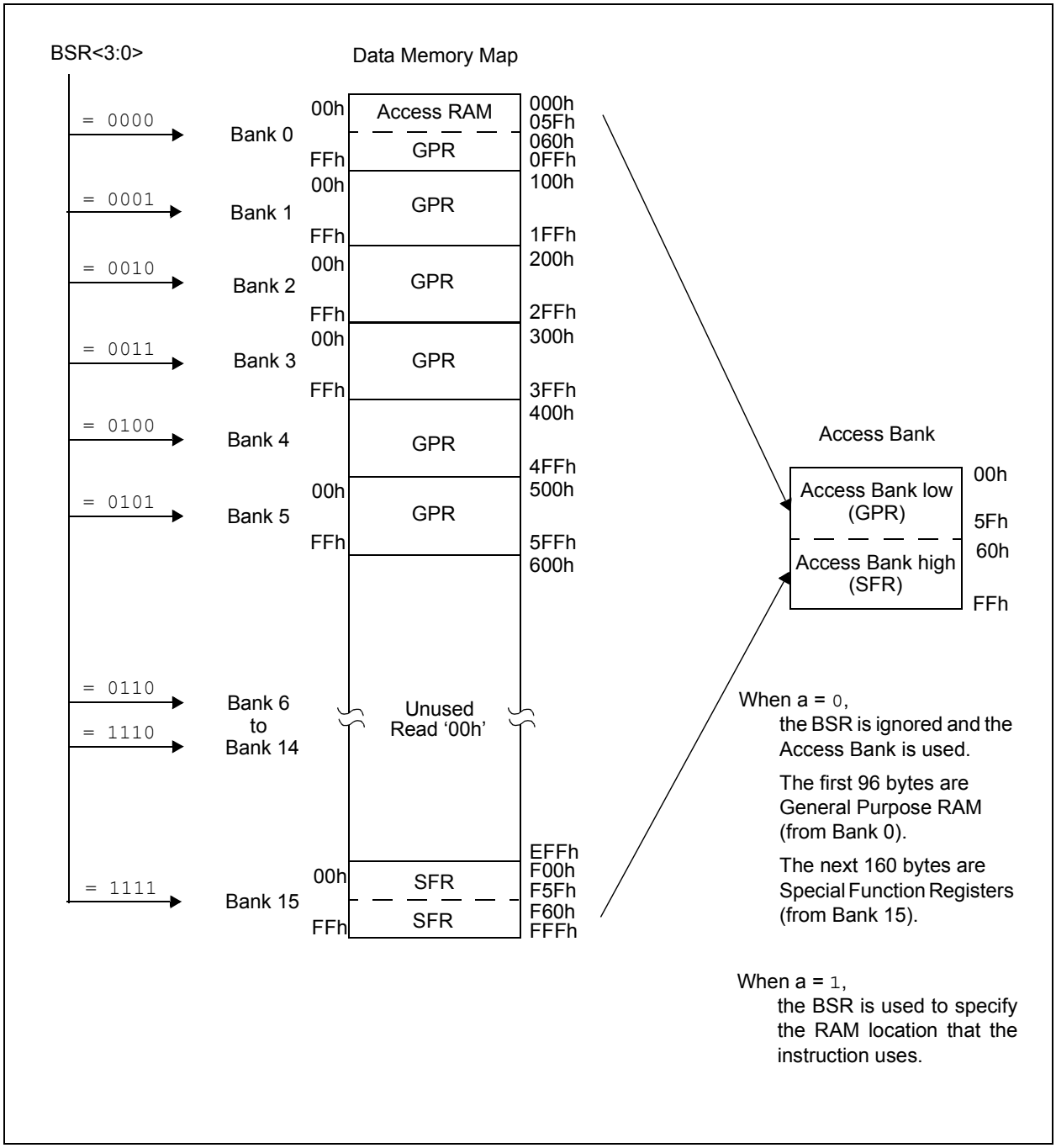

© 2003 Microchip Technology Inc.

TABLE 4-1: SPECIAL FUNCTION REGISTER MAP

Address	Name	Address	Name	Address	Name	Address	Name
FFFh	TOSU	FDFh	INDF2(2)	FBFh	CCPR1H	F9Fh	IPR1
FFEh	TOSH	FDEh	POSTINC2(2)	FBEh	CCPR1L	F9Eh	PIR1
FFDh	TOSL	FDDh	POSTDEC2(2)	FBDh	CCP1CON	F9Dh	PIE1
FFCh	STKPTR	FDCh	PREINC2(2)	FBCh	ECCPR1H(5)	F9Ch	—
FFBh	PCLATU	FDBh	PLUSW2(2)	FBBh	ECCPR1L(5)	F9Bh	—
FFAh	PCLATH	FDAh	FSR2H	FBAh	ECCP1CON(5)	F9Ah	—
FF9h	PCL	FD9h	FSR2L	FB9h	—	F99h	—
FF8h	TBLPTRU	FD8h	STATUS	FB8h	—	F98h	—
FF7h	TBLPTRH	FD7h	TMR0H	FB7h	ECCP1DEL(5)	F97h	—
FF6h	TBLPTRL	FD6h	TMR0L	FB6h	ECCPAS(5)	F96h	TRISE(5)
FF5h	TABLAT	FD5h	T0CON	FB5h	CVRCON(5)	F95h	TRISD(5)
FF4h	PRODH	FD4h	—	FB4h	CMCON(5)	F94h	TRISC
FF3h	PRODL	FD3h	OSCCON	FB3h	TMR3H	F93h	TRISB
FF2h	INTCON	FD2h	LVDCON	FB2h	TMR3L	F92h	TRISA
FF1h	INTCON2	FD1h	WDTCON	FB1h	T3CON	F91h	—
FF0h	INTCON3	FD0h	RCON	FB0h	—	F90h	—
FEFh	INDF0(2)	FCFh	TMR1H	FAFh	SPBRG	F8Fh	—
FEEh	POSTINC0(2)	FCEh	TMR1L	FAEh	RCREG	F8Eh	—
FEDh	POSTDEC0(2)	FCDh	T1CON	FADh	TXREG	F8Dh	LATE(5)
FECh	PREINC0(2)	FCCh	TMR2	FACh	TXSTA	F8Ch	LATD(5)
FEBh	PLUSW0(2)	FCBh	PR2	FABh	RCSTA	F8Bh	LATC
FEAh	FSR0H	FCAh	T2CON	FAAh	—	F8Ah	LATB
FE9h	FSR0L	FC9h	SSPBUF	FA9h	EEADR	F89h	LATA
FE8h	WREG	FC8h	SSPADD	FA8h	EEDATA	F88h	—
FE7h	INDF1(2)	FC7h	SSPSTAT	FA7h	EECON2	F87h	—
FE6h	POSTINC1(2)	FC6h	SSPCON1	FA6h	EECON1	F86h	—
FE5h	POSTDEC1(2)	FC5h	SSPCON2	FA5h	IPR3	F85h	—
FE4h	PREINC1(2)	FC4h	ADRESH	FA4h	PIR3	F84h	PORTE(5)
FE3h	PLUSW1(2)	FC3h	ADRESL	FA3h	PIE3	F83h	PORTD(5)
FE2h	FSR1H	FC2h	ADCON0	FA2h	IPR2	F82h	PORTC
FE1h	FSR1L	FC1h	ADCON1	FA1h	PIR2	F81h	PORTB
FE0h	BSR	FC0h	—	FA0h	PIE2	F80h	PORTA

Note 1: Unimplemented registers are read as ‘0’.

2: This is not a physical register.

3: Contents of register are dependent on WIN2:WIN0 bits in CANCON register.

4: CANSTAT register is repeated in these locations to simplify application firmware. Unique names are given for each instance of the CANSTAT register, due to the Microchip Header file requirement.

5: These registers are not implemented on the PIC18F248 and PIC18F258.

TABLE 4-1: SPECIAL FUNCTION REGISTER MAP (CONTINUED)

Address	Name	Address	Name	Address	Name	Address	Name
F7Fh	—	F5Fh	—	F3Fh	—	F1Fh	RXM1EIDL
F7Eh	—	F5Eh	CANSTATRO1(4)	F3Eh	CANSTATRO3(4)	F1Eh	RXM1EIDH
F7Dh	—	F5Dh	RXB1D7	F3Dh	TXB1D7	F1Dh	RXM1SIDL
F7Ch	—	F5Ch	RXB1D6	F3Ch	TXB1D6	F1Ch	RXM1SIDH
F7Bh	—	F5Bh	RXB1D5	F3Bh	TXB1D5	F1Bh	RXM0EIDL
F7Ah	—	F5Ah	RXB1D4	F3Ah	TXB1D4	F1Ah	RXM0EIDH
F79h	—	F59h	RXB1D3	F39h	TXB1D3	F19h	RXM0SIDL
F78h	—	F58h	RXB1D2	F38h	TXB1D2	F18h	RXM0SIDH
F77h	—	F57h	RXB1D1	F37h	TXB1D1	F17h	RXF5EIDL
F76h	TXERRCNT	F56h	RXB1D0	F36h	TXB1D0	F16h	RXF5EIDH
F75h	RXERRCNT	F55h	RXB1DLC	F35h	TXB1DLC	F15h	RXF5SIDL
F74h	COMSTAT	F54h	RXB1EIDL	F34h	TXB1EIDL	F14h	RXF5SIDH
F73h	CIOCON	F53h	RXB1EIDH	F33h	TXB1EIDH	F13h	RXF4EIDL
F72h	BRGCON3	F52h	RXB1SIDL	F32h	TXB1SIDL	F12h	RXF4EIDH
F71h	BRGCON2	F51h	RXB1SIDH	F31h	TXB1SIDH	F11h	RXF4SIDL
F70h	BRGCON1	F50h	RXB1CON	F30h	TXB1CON	F10h	RXF4SIDH
F6Fh	CANCON	F4Fh	—	F2Fh	—	F0Fh	RXF3EIDL
F6Eh	CANSTAT	F4Eh	CANSTATRO2(4)	F2Eh	CANSTATRO4(4)	F0Eh	RXF3EIDH
F6Dh	RXB0D7(3)	F4Dh	TXB0D7	F2Dh	TXB2D7	F0Dh	RXF3SIDL
F6Ch	RXB0D6(3)	F4Ch	TXB0D6	F2Ch	TXB2D6	F0Ch	RXF3SIDH
F6Bh	RXB0D5(3)	F4Bh	TXB0D5	F2Bh	TXB2D5	F0Bh	RXF2EIDL
F6Ah	RXB0D4(3)	F4Ah	TXB0D4	F2Ah	TXB2D4	F0Ah	RXF2EIDH
F69h	RXB0D3(3)	F49h	TXB0D3	F29h	TXB2D3	F09h	RXF2SIDL
F68h	RXB0D2(3)	F48h	TXB0D2	F28h	TXB2D2	F08h	RXF2SIDH
F67h	RXB0D1(3)	F47h	TXB0D1	F27h	TXB2D1	F07h	RXF1EIDL
F66h	RXB0D0(3)	F46h	TXB0D0	F26h	TXB2D0	F06h	RXF1EIDH
F65h	RXB0DLC(3)	F45h	TXB0DLC	F25h	TXB2DLC	F05h	RXF1SIDL
F64h	RXB0EIDL(3)	F44h	TXB0EIDL	F24h	TXB2EIDL	F04h	RXF1SIDH
F63h	RXB0EIDH(3)	F43h	TXB0EIDH	F23h	TXB2EIDH	F03h	RXF0EIDL
F62h	RXB0SIDL(3)	F42h	TXB0SIDL	F22h	TXB2SIDL	F02h	RXF0EIDH
F61h	RXB0SIDH(3)	F41h	TXB0SIDH	F21h	TXB2SIDH	F01h	RXF0SIDL
F60h	RXB0CON(3)	F40h	TXB0CON	F20h	TXB2CON	F00h	RXF0SIDH

Note: Shaded registers are available in Bank 15, while the rest are in Access Bank low.

Note 1: Unimplemented registers are read as '0'.

2: This is not a physical register.

3: Contents of register are dependent on WIN2:WIN0 bits in CANCON register.

4: CANSTAT register is repeated in these locations to simplify application firmware. Unique names are given for each instance of the CANSTAT register, due to the Microchip Header file requirement.

5: These registers are not implemented on the PIC18F248 and PIC18F258.

© 2003 Microchip Technology Inc.

TABLE 4-2: REGISTER FILE SUMMARY

File Name	Bit 7	Bit 6	Bit 5	Bit 4	Bit 3	Bit 2	Bit 1	Bit 0	Value on POR, BOR	Details on Page:
TOSU	—	—	—	Top-of-Stack Upper Byte (TOS<20:16>)					---0 0000	30, 38
TOSH	Top-of-Stack High Byte (TOS<15:8>)								0000 0000	30, 38
TOSL	Top-of-Stack Low Byte (TOS<7:0>)								0000 0000	30, 38
STKPTR	STKFUL	STKUNF	—	Return Stack Pointer					00-0 0000	30, 39
PCLATU	—	—	bit21(2)	Holding Register for PC<20:16>					---0 0000	30, 40
PCLATH	Holding Register for PC<15:8>								0000 0000	30, 40
PCL	PC Low Byte (PC<7:0>)								0000 0000	30, 40
TBLPTRU	—	—	bit21(2)	Program Memory Table Pointer Upper Byte (TBLPTR<20:16>)					--00 0000	30, 68
TBLPTRH	Program Memory Table Pointer High Byte (TBLPTR<15:8>)								0000 0000	30, 68
TBLPTRL	Program Memory Table Pointer Low Byte (TBLPTR<7:0>)								0000 0000	30, 68
TABLAT	Program Memory Table Latch								0000 0000	30, 68
PRODH	Product Register High Byte								xxxx xxxx	30, 75
PRODL	Product Register Low Byte								xxxx xxxx	30, 75
INTCON	GIE/GIEH	PEIE/GIEL	TMR0IE	INT0IE	RBIE	TMR0IF	INT0IF	RBIF	0000 000x	30, 79
INTCON2	$\overline{\text{RBPU}}$	INTEDG0	INTEDG1	—	—	TMR0IP	—	RBIP	111- -1-1	30, 80
INTCON3	INT2IP	INT1IP	—	INT2IE	INT1IE	—	INT2IF	INT1IF	11-1 0-00	30, 81
INDF0	Uses contents of FSR0 to address data memory - value of FSR0 not changed (not a physical register)								n/a	30, 55
POSTINC0	Uses contents of FSR0 to address data memory - value of FSR0 post-incremented (not a physical register)								n/a	30, 55
POSTDEC0	Uses contents of FSR0 to address data memory - value of FSR0 post-incremented (not a physical register)								n/a	30, 55
PREINC0	Uses contents of FSR0 to address data memory - value of FSR0 pre-incremented (not a physical register)								n/a	30, 55
PLUSW0	Uses contents of FSR0 to address data memory - value of FSR0 offset by W (not a physical register)								n/a	30, 55
FSR0H	—	—	—	—	Indirect Data Memory Address Pointer 0 High				---- xxxx	30, 55
FSR0L	Indirect Data Memory Address Pointer 0 Low Byte								xxxx xxxx	30, 55
WREG	Working Register								uuuu uuuu	30, 55
INDF1	Uses contents of FSR1 to address data memory - value of FSR1 not changed (not a physical register)								n/a	30, 55
POSTINC1	Uses contents of FSR1 to address data memory - value of FSR1 post-incremented (not a physical register)								n/a	30, 55
POSTDEC1	Uses contents of FSR1 to address data memory - value of FSR1 post-incremented (not a physical register)								n/a	30, 55
PREINC1	Uses contents of FSR1 to address data memory - value of FSR1 pre-incremented (not a physical register)								n/a	30, 55
PLUSW1	Uses contents of FSR1 to address data memory - value of FSR1 offset by W (not a physical register)								n/a	30, 55
FSR1H	—	—	—	—	Indirect Data Memory Address Pointer 1 High				---- xxxx	31, 55
FSR1L	Indirect Data Memory Address Pointer 1 Low Byte								xxxx xxxx	31, 55
BSR	—	—	—	—	Bank Select Register				---- 0000	31, 54
INDF2	Uses contents of FSR2 to address data memory - value of FSR2 not changed (not a physical register)								n/a	31, 55
POSTINC2	Uses contents of FSR2 to address data memory - value of FSR2 post-incremented (not a physical register)								n/a	31, 55
POSTDEC2	Uses contents of FSR2 to address data memory - value of FSR2 post-incremented (not a physical register)								n/a	31, 55
PREINC2	Uses contents of FSR2 to address data memory - value of FSR2 pre-incremented (not a physical register)								n/a	31, 55
PLUSW2	Uses contents of FSR2 to address data memory - value of FSR2 offset by W (not a physical register)								n/a	31, 55
FSR2H	—	—	—	—	Indirect Data Memory Address Pointer 2 High				---- xxxx	31, 55
FSR2L	Indirect Data Memory Address Pointer 2 Low Byte								xxxx xxxx	31, 55
STATUS	—	—	—	N	OV	Z	DC	C	---x xxxx	31, 57
TMR0H	Timer0 Register High Byte								0000 0000	31, 111
TMR0L	Timer0 Register Low Byte								xxxx xxxx	31, 111
T0CON	TMR0ON	T08BIT	T0CS	T0SE	PSA	T0PS2	T0PS1	T0PS0	1111 1111	31, 109
OSCCON	—	—	—	—	—	—	—	SCS	---- ---0	31, 20
LVDCON	—	—	IRVST	LVDEN	LVDL3	LVDL2	LVDL1	LVDL0	--00 0101	31, 261
WDTCON	—	—	—	—	—	—	—	SWDTEN	---- ---0	31, 272
RCON	IPEN	—	—	$\overline{\text{RI}}$	$\overline{\text{TO}}$	$\overline{\text{PD}}$	$\overline{\text{POR}}$	$\overline{\text{BOR}}$	0--1 11qq	31, 58, 91

Legend: x = unknown, u = unchanged, - = unimplemented, q = value depends on condition

Note 1: These registers or register bits are not implemented on the PIC18F248 and PIC18F258 and read as '0's.

2: Bit 21 of the TBLPTRU allows access to the device configuration bits.

3: RA6 and associated bits are configured as port pins in RCIO and ECIO Oscillator mode only and read '0' in all other Oscillator modes.

TABLE 4-2: REGISTER FILE SUMMARY (CONTINUED)

File Name	Bit 7	Bit 6	Bit 5	Bit 4	Bit 3	Bit 2	Bit 1	Bit 0	Value on POR, BOR	Details on Page:
TMR1H	Timer1 Register High Byte								xxxx xxxx	31, 115
TMR1L	Timer1 Register Low Byte								xxxx xxxx	31, 115
T1CON	RD16	—	T1CKPS1	T1CKPS0	T1OSCEN	$\overline{\text{T1SYNC}}$	TMR1CS	TMR1ON	0-00 0000	31, 113
TMR2	Timer2 Register								0000 0000	31, 118
PR2	Timer2 Period Register								1111 1111	31, 118
T2CON	—	TOUTPS3	TOUTPS2	TOUTPS1	TOUTPS0	TMR2ON	T2CKPS1	T2CKPS0	-000 0000	31, 117
SSPBUF	SSP Receive Buffer/Transmit Register								xxxx xxxx	31, 146
SSPADD	SSP Address Register in I^2C Slave mode. SSP Baud Rate Reload Register in I^2C Master mode.								0000 0000	31, 152
SSPSTAT	SMP	CKE	D/$\overline{\text{A}}$	P	S	R/$\overline{\text{W}}$	UA	BF	0000 0000	31, 144, 153
SSPCON1	WCOL	SSPOV	SSPEN	CKP	SSPM3	SSPM2	SSPM1	SSPM0	0000 0000	31, 145, 145
SSPCON2	GCEN	ACKSTAT	ACKDT	ACKEN	RCEN	PEN	RSEN	SEN	0000 0000	31, 155
ADRESH	A/D Result Register High Byte								xxxx xxxx	32, 243
ADRESL	A/D Result Register Low Byte								xxxx xxxx	32, 243
ADCON0	ADCS1	ADCS0	CHS2	CHS1	CHS0	GO/$\overline{\text{DONE}}$	—	ADON	0000 00-0	32, 241
ADCON1	ADFM	ADCS2	—	—	PCFG3	PCFG2	PCFG1	PCFG0	00-- 0000	32, 242
CCPR1H	Capture/Compare/PWM Register1 High Byte								xxxx xxxx	32, 124
CCPR1L	Capture/Compare/PWM Register1 Low Byte								xxxx xxxx	32, 124
CCP1CON	—	—	DC1B1	DC1B0	CCP1M3	CCP1M2	CCP1M1	CCP1M0	--00 0000	32, 123
ECCPR1H(1)	Enhanced Capture/Compare/PWM Register1 High Byte								xxxx xxxx	32, 133
ECCPR1L(1)	Enhanced Capture/Compare/PWM Register1 Low Byte								xxxx xxxx	32, 133
ECCP1CON(1)	EPWM1M1	EPWM1M0	EDC1B1	EDC1B0	ECCP1M3	ECCP1M2	ECCP1M1	ECCP1M0	0000 0000	32, 131
ECCP1DEL(1)	EPDC7	EPDC6	EPDC5	EPDC4	EPDC3	EPDC2	EPDC1	EPDC0	0000 0000	32, 140
ECCPAS(1)	ECCPASE	ECCPAS2	ECCPAS1	ECCPAS0	PSSAC1	PSSAC0	PSSBD1	PSSBD0	0000 0000	32, 142
CVRCON(1)	CVREN	CVROE	CVRR	CVRSS	CVR3	CVR2	CVR1	CVR0	0000 0000	32, 255
CMCON(1)	C2OUT	C1OUT	C2INV	C1INV	CIS	CM2	CM1	CM0	0000 0000	32, 249
TMR3H	Timer3 Register High Byte								xxxx xxxx	32, 121
TMR3L	Timer3 Register Low Byte								xxxx xxxx	32, 121
T3CON	RD16	T3ECCP1	T3CKPS1	T3CKPS0	T3CCP1	$\overline{\text{T3SYNC}}$	TMR3CS	TMR3ON	0000 0000	32, 119
SPBRG	USART1 Baud Rate Generator								0000 0000	32, 185
RCREG	USART1 Receive Register								0000 0000	32, 191
TXREG	USART1 Transmit Register								0000 0000	32, 189
TXSTA	CSRC	TX9	TXEN	SYNC	—	BRGH	TRMT	TX9D	0000 -010	32, 183
RCSTA	SPEN	RX9	SREN	CREN	ADDEN	FERR	OERR	RX9D	0000 000X	32, 184
EEADR	EEPROM Address Register								xxxx xxxx	32, 59
EEDATA	EEPROM Data Register								xxxx xxxx	32, 59
EECON2	EEPROM Control Register2 (not a physical register)								xxxx xxxx	32, 59
EECON1	EEPGD	CFGS	—	FREE	WRERR	WREN	$\overline{\text{WR}}$	$\overline{\text{RD}}$	xx-0 x000	32, 60, 67
IPR3	IRXIP	WAKIP	ERRIP	TXB2IP	TXB1IP	TXB0IP	RXB1IP	RXB0IP	1111 1111	32, 90
PIR3	IRXIF	WAKIF	ERRIF	TXB2IF	TXB1IF	TXB0IF	RXB1IF	RXB0IF	0000 0000	32, 84
PIE3	IRXIE	WAKIE	ERRIE	TXB2IE	TXB1IE	TXB0IE	RXB1IE	RXB0IE	0000 0000	32, 87
IPR2	—	CMIP	—	EEIP	BCLIP	LVDIP	TMR3IP	ECCP1IP(1)	-1-1 1111	33, 89
PIR2	—	CMIF	—	EEIF	BCLIF	LVDIF	TMR3IF	ECCP1IF(1)	-0-0 0000	33, 83
PIE2	—	CMIE	—	EEIE	BCLIE	LVDIE	TMR3IE	ECCP1IE(1)	-0-0 0000	33, 86

Legend: x = unknown, u = unchanged, - = unimplemented, q = value depends on condition

Note 1: These registers or register bits are not implemented on the PIC18F248 and PIC18F258 and read as '0's.

2: Bit 21 of the TBLPTRU allows access to the device configuration bits.

3: RA6 and associated bits are configured as port pins in RCIO and ECIO Oscillator mode only and read '0' in all other Oscillator modes.

© 2003 Microchip Technology Inc.

TABLE 4-2: REGISTER FILE SUMMARY (CONTINUED)

File Name	Bit 7	Bit 6	Bit 5	Bit 4	Bit 3	Bit 2	Bit 1	Bit 0	Value on POR, BOR	Details on Page:
IPR1	PSPIP	ADIP	RCIP	TXIP	SSPIP	CCP1IP	TMR2IP	TMR1IP	1111 1111	33, 88
PIR1	PSPIF	ADIF	RCIF	TXIF	SSPIF	CCP1IF	TMR2IF	TMR1IF	0000 0000	33, 82
PIE1	PSPIE	ADIE	RCIE	TXIE	SSPIE	CCP1IE	TMR2IE	TMR1IE	0000 0000	33, 85
TRISE(1)	IBF	OBF	IBOV	PSPMODE	—	Data Direction bits for PORTE(1)			0000 -111	33, 105
TRISD(1)	Data Direction Control Register for PORTD(1)								1111 1111	33, 102
TRISC	Data Direction Control Register for PORTC								1111 1111	33, 100
TRISB	Data Direction Control Register for PORTB								1111 1111	33, 96
TRISA(3)	—	Data Direction Control Register for PORTA							--11 1111	33, 93
LATE(1)	—	—	—	—	—	Read PORTE Data Latch, Write PORTE Data Latch(1)			---- -xxx	33, 104
LATD(1)	Read PORTD Data Latch, Write PORTD Data Latch(1)								xxxx xxxx	33, 102
LATC	Read PORTC Data Latch, Write PORTC Data Latch								xxxx xxxx	33, 100
LATB	Read PORTB Data Latch, Write PORTB Data Latch								xxxx xxxx	33, 96
LATA(3)	—	Read PORTA Data Latch, Write PORTA Data Latch							-xxx xxxx	33, 93
PORTE(1)	—	—	—	—	—	Read PORTE pins, Write PORTE Data Latch(1)			---- -000	33, 104
PORTD(1)	Read PORTD pins, Write PORTD Data Latch(1)								xxxx xxxx	33, 102
PORTC	Read PORTC pins, Write PORTC Data Latch								xxxx xxxx	33, 100
PORTB	Read PORTB pins, Write PORTB Data Latch								xxxx xxxx	33, 96
PORTA(3)	—	Read PORTA pins, Write PORTA Data Latch							-x0x 0000	33, 93
TXERRCNT	TEC7	TEC6	TEC5	TEC4	TEC3	TEC2	TEC1	TEC0	0000 0000	33, 209
RXERRCNT	REC7	REC6	REC5	REC4	REC3	REC2	REC1	REC0	0000 0000	33, 214
COMSTAT	RXB0OVFL	RXB1OVFL	TXBO	TXBP	RXBP	TXWARN	RXWARN	EWARN	0000 0000	33, 205
CIOCON	—	—	ENDRHI	CANCAP	—	—	—	—	--00 ----	33, 221
BRGCON3	—	WAKFIL	—	—	—	SEG2PH2	SEG2PH1	SEG2PH0	-0-- -000	33, 220
BRGCON2	SEG2PHTS	SAM	SEG1PH2	SEG1PH1	SEG1PH0	PRSEG2	PRSEG1	PRSEG0	0000 0000	33, 219
BRGCON1	SJW1	SJW0	BRP5	BRP4	BRP3	BRP2	BRP1	BRP0	0000 0000	33, 218
CANCON	REQOP2	REQOP1	REQOP0	ABAT	WIN2	WIN1	WIN0	—	xxxx xxx-	33, 201
CANSTAT	OPMODE2	OPMODE1	OPMODE0	—	ICODE2	ICODE1	ICODE0	—	xxx- xxx-	33, 202
RXB0D7	RXB0D77	RXB0D76	RXB0D75	RXB0D74	RXB0D73	RXB0D72	RXB0D71	RXB0D70	xxxx xxxx	34, 214
RXB0D6	RXB0D67	RXB0D66	RXB0D65	RXB0D64	RXB0D63	RXB0D62	RXB0D61	RXB0D60	xxxx xxxx	34, 214
RXB0D5	RXB0D57	RXB0D56	RXB0D55	RXB0D54	RXB0D53	RXB0D52	RXB0D51	RXB0D50	xxxx xxxx	34, 214
RXB0D4	RXB0D47	RXB0D46	RXB0D45	RXB0D44	RXB0D43	RXB0D42	RXB0D41	RXB0D40	xxxx xxxx	34, 214
RXB0D3	RXB0D37	RXB0D36	RXB0D35	RXB0D34	RXB0D33	RXB0D32	RXB0D31	RXB0D30	xxxx xxxx	34, 214
RXB0D2	RXB0D27	RXB0D26	RXB0D25	RXB0D24	RXB0D23	RXB0D22	RXB0D21	RXB0D20	xxxx xxxx	34, 214
RXB0D1	RXB0D17	RXB0D16	RXB0D15	RXB0D14	RXB0D13	RXB0D12	RXB0D11	RXB0D10	xxxx xxxx	34, 214
RXB0D0	RXB0D07	RXB0D06	RXB0D05	RXB0D04	RXB0D03	RXB0D02	RXB0D01	RXB0D00	xxxx xxxx	34, 214
RXB0DLC	—	RXRTR	RB1	RB0	DLC3	DLC2	DLC1	DLC0	-xxx xxxx	34, 213
RXB0EIDL	EID7	EID6	EID5	EID4	EID3	EID2	EID1	EID0	xxxx xxxx	34, 213
RXB0EIDH	EID15	EID14	EID13	EID12	EID11	EID10	EID9	EID8	xxxx xxxx	34, 212
RXB0SIDL	SID2	SID1	SID0	SRR	EXID	—	EID17	EID16	xxxx x-xx	34, 212
RXB0SIDH	SID10	SID9	SID8	SID7	SID6	SID5	SID4	SID3	xxxx xxxx	34, 212
RXB0CON	RXFUL	RXM1	RXM0	—	RXRTRRO	RXB0DBEN	JTOFF	FILHIT0	000- 0000	34, 210

Legend: x = unknown, u = unchanged, - = unimplemented, q = value depends on condition

Note 1: These registers or register bits are not implemented on the PIC18F248 and PIC18F258 and read as '0's.

2: Bit 21 of the TBLPTRU allows access to the device configuration bits.

3: RA6 and associated bits are configured as port pins in RCIO and ECIO Oscillator mode only and read '0' in all other Oscillator modes.

TABLE 4-2: REGISTER FILE SUMMARY (CONTINUED)

File Name	Bit 7	Bit 6	Bit 5	Bit 4	Bit 3	Bit 2	Bit 1	Bit 0	Value on POR, BOR	Details on Page:
CANSTATRO1	OPMODE2	OPMODE1	OPMODE0	—	ICODE2	ICODE1	ICODE0	—	xxx- xxx-	33, 202
RXB1D7	RXB1D77	RXB1D76	RXB1D75	RXB1D74	RXB1D73	RXB1D72	RXB1D71	RXB1D70	xxxx xxxx	34, 214
RXB1D6	RXB1D67	RXB1D66	RXB1D65	RXB1D64	RXB1D63	RXB1D62	RXB1D61	RXB1D60	xxxx xxxx	34, 214
RXB1D5	RXB1D57	RXB1D56	RXB1D55	RXB1D54	RXB1D53	RXB1D52	RXB1D51	RXB1D50	xxxx xxxx	34, 214
RXB1D4	RXB1D47	RXB1D46	RXB1D45	RXB1D44	RXB1D43	RXB1D42	RXB1D41	RXB1D40	xxxx xxxx	34, 214
RXB1D3	RXB1D37	RXB1D36	RXB1D35	RXB1D34	RXB1D33	RXB1D32	RXB1D31	RXB1D30	xxxx xxxx	34, 214
RXB1D2	RXB1D27	RXB1D26	RXB1D25	RXB1D24	RXB1D23	RXB1D22	RXB1D21	RXB1D20	xxxx xxxx	34, 214
RXB1D1	RXB1D17	RXB1D16	RXB1D15	RXB1D14	RXB1D13	RXB1D12	RXB1D11	RXB1D10	xxxx xxxx	34, 214
RXB1D0	RXB1D07	RXB1D06	RXB1D05	RXB1D04	RXB1D03	RXB1D02	RXB1D01	RXB1D00	xxxx xxxx	34, 214
RXB1DLC	—	RXRTR	RB1	RB0	DLC3	DLC2	DLC1	DLC0	-xxx xxxx	34, 213
RXB1EIDL	EID7	EID6	EID5	EID4	EID3	EID2	EID1	EID0	xxxx xxxx	34, 213
RXB1EIDH	EID15	EID14	EID13	EID12	EID11	EID10	EID9	EID8	xxxx xxxx	34, 212
RXB1SIDL	SID2	SID1	SID0	SRR	EXID	—	EID17	EID16	xxxx x-xx	34, 212
RXB1SIDH	SID10	SID9	SID8	SID7	SID6	SID5	SID4	SID3	xxxx xxxx	34, 212
RXB1CON	RXFUL	RXM1	RXM0	—	RXRTRRO	FILHIT2	FILHIT1	FILHIT0	000- 0000	34, 211
CANSTATRO2	OPMODE2	OPMODE1	OPMODE0	—	ICODE2	ICODE1	ICODE0	—	xxx- xxx-	33, 202
TXB0D7	TXB0D77	TXB0D76	TXB0D75	TXB0D74	TXB0D73	TXB0D72	TXB0D71	TXB0D70	xxxx xxxx	34, 208
TXB0D6	TXB0D67	TXB0D66	TXB0D65	TXB0D64	TXB0D63	TXB0D62	TXB0D61	TXB0D60	xxxx xxxx	34, 208
TXB0D5	TXB0D57	TXB0D56	TXB0D55	TXB0D54	TXB0D53	TXB0D52	TXB0D51	TXB0D50	xxxx xxxx	34, 208
TXB0D4	TXB0D47	TXB0D46	TXB0D45	TXB0D44	TXB0D43	TXB0D42	TXB0D41	TXB0D40	xxxx xxxx	34, 208
TXB0D3	TXB0D37	TXB0D36	TXB0D35	TXB0D34	TXB0D33	TXB0D32	TXB0D31	TXB0D30	xxxx xxxx	34, 208
TXB0D2	TXB0D27	TXB0D26	TXB0D25	TXB0D24	TXB0D23	TXB0D22	TXB0D21	TXB0D20	xxxx xxxx	34, 208
TXB0D1	TXB0D17	TXB0D16	TXB0D15	TXB0D14	TXB0D13	TXB0D12	TXB0D11	TXB0D10	xxxx xxxx	34, 208
TXB0D0	TXB0D07	TXB0D06	TXB0D05	TXB0D04	TXB0D03	TXB0D02	TXB0D01	TXB0D00	xxxx xxxx	34, 208
TXB0DLC	—	TXRTR	—	—	DLC3	DLC2	DLC1	DLC0	-x-- xxxx	35, 209
TXB0EIDL	EID7	EID6	EID5	EID4	EID3	EID2	EID1	EID0	xxxx xxxx	35, 208
TXB0EIDH	EID15	EID14	EID13	EID12	EID11	EID10	EID9	EID8	xxxx xxxx	35, 207
TXB0SIDL	SID2	SID1	SID0	—	EXIDE	—	EID17	EID16	xxx- x-xx	35, 207
TXB0SIDH	SID10	SID9	SID8	SID7	SID6	SID5	SID4	SID3	xxxx xxxx	35, 207
TXB0CON	—	TXABT	TXLARB	TXERR	TXREQ	—	TXPRI1	TXPRI0	-000 0-00	35, 206
CANSTATRO3	OPMODE2	OPMODE1	OPMODE0	—	ICODE2	ICODE1	ICODE0	—	xxx- xxx-	33, 202
TXB1D7	TXB1D77	TXB1D76	TXB1D75	TXB1D74	TXB1D73	TXB1D72	TXB1D71	TXB1D70	xxxx xxxx	35, 208
TXB1D6	TXB1D67	TXB1D66	TXB1D65	TXB1D64	TXB1D63	TXB1D62	TXB1D61	TXB1D60	xxxx xxxx	35, 208
TXB1D5	TXB1D57	TXB1D56	TXB1D55	TXB1D54	TXB1D53	TXB1D52	TXB1D51	TXB1D50	xxxx xxxx	35, 208
TXB1D4	TXB1D47	TXB1D46	TXB1D45	TXB1D44	TXB1D43	TXB1D42	TXB1D41	TXB1D40	xxxx xxxx	35, 208
TXB1D3	TXB1D37	TXB1D36	TXB1D35	TXB1D34	TXB1D33	TXB1D32	TXB1D31	TXB1D30	xxxx xxxx	35, 208
TXB1D2	TXB1D27	TXB1D26	TXB1D25	TXB1D24	TXB1D23	TXB1D22	TXB1D21	TXB1D20	xxxx xxxx	35, 208
TXB1D1	TXB1D17	TXB1D16	TXB1D15	TXB1D14	TXB1D13	TXB1D12	TXB1D11	TXB1D10	xxxx xxxx	35, 208
TXB1D0	TXB1D07	TXB1D06	TXB1D05	TXB1D04	TXB1D03	TXB1D02	TXB1D01	TXB1D00	xxxx xxxx	35, 208
TXB1DLC	—	TXRTR	—	—	DLC3	DLC2	DLC1	DLC0	-x-- xxxx	35, 209
TXB1EIDL	EID7	EID6	EID5	EID4	EID3	EID2	EID1	EID0	xxxx xxxx	35, 208
TXB1EIDH	EID15	EID14	EID13	EID12	EID11	EID10	EID9	EID8	xxxx xxxx	35, 207
TXB1SIDL	SID2	SID1	SID0	—	EXIDE	—	EID17	EID16	xxx- x-xx	35, 207
TXB1SIDH	SID10	SID9	SID8	SID7	SID6	SID5	SID4	SID3	xxxx xxxx	35, 207
TXB1CON	—	TXABT	TXLARB	TXERR	TXREQ	—	TXPRI1	TXPRI0	0000 0000	35, 206

Legend: x = unknown, u = unchanged, - = unimplemented, q = value depends on condition

Note 1: These registers or register bits are not implemented on the PIC18F248 and PIC18F258 and read as '0's.

2: Bit 21 of the TBLPTRU allows access to the device configuration bits.

3: RA6 and associated bits are configured as port pins in RCIO and ECIO Oscillator mode only and read '0' in all other Oscillator modes.

© 2003 Microchip Technology Inc.

TABLE 4-2: REGISTER FILE SUMMARY (CONTINUED)

File Name	Bit 7	Bit 6	Bit 5	Bit 4	Bit 3	Bit 2	Bit 1	Bit 0	Value on POR, BOR	Details on Page:
CANSTATRO4	OPMODE2	OPMODE1	OPMODE0	—	ICODE2	ICODE1	ICODE0	—	xxx- xxx-	33, 202
TXB2D7	TXB2D77	TXB2D76	TXB2D75	TXB2D74	TXB2D73	TXB2D72	TXB2D71	TXB2D70	xxxx xxxx	35, 208
TXB2D6	TXB2D67	TXB2D66	TXB2D65	TXB2D64	TXB2D63	TXB2D62	TXB2D61	TXB2D60	xxxx xxxx	35, 208
TXB2D5	TXB2D57	TXB2D56	TXB2D55	TXB2D54	TXB2D53	TXB2D52	TXB2D51	TXB2D50	xxxx xxxx	35, 208
TXB2D4	TXB2D47	TXB2D46	TXB2D45	TXB2D44	TXB2D43	TXB2D42	TXB2D41	TXB2D40	xxxx xxxx	35, 208
TXB2D3	TXB2D37	TXB2D36	TXB2D35	TXB2D34	TXB2D33	TXB2D32	TXB2D31	TXB2D30	xxxx xxxx	35, 208
TXB2D2	TXB2D27	TXB2D26	TXB2D25	TXB2D24	TXB2D23	TXB2D22	TXB2D21	TXB2D20	xxxx xxxx	35, 208
TXB2D1	TXB2D17	TXB2D16	TXB2D15	TXB2D14	TXB2D13	TXB2D12	TXB2D11	TXB2D10	xxxx xxxx	35, 208
TXB2D0	TXB2D07	TXB2D06	TXB2D05	TXB2D04	TXB2D03	TXB2D02	TXB2D01	TXB2D00	xxxx xxxx	35, 208
TXB2DLC	—	TXRTR	—	—	DLC3	DLC2	DLC1	DLC0	-x-- xxxx	35, 209
TXB2EIDL	EID7	EID6	EID5	EID4	EID3	EID2	EID1	EID0	xxxx xxxx	35, 208
TXB2EIDH	EID15	EID14	EID13	EID12	EID11	EID10	EID9	EID8	xxxx xxxx	35, 207
TXB2SIDL	SID2	SID1	SID0	—	EXIDE	—	EID17	EID16	xxx- x-xx	35, 207
TXB2SIDH	SID10	SID9	SID8	SID7	SID6	SID5	SID4	SID3	xxxx xxxx	35, 207
TXB2CON	—	TXABT	TXLARB	TXERR	TXREQ	—	TXPRI1	TXPRI0	-000 0-00	35, 206
RXM1EIDL	EID7	EID6	EID5	EID4	EID3	EID2	EID1	EID0	xxxx xxxx	36, 217
RXM1EIDH	EID15	EID14	EID13	EID12	EID11	EID10	EID9	EID8	xxxx xxxx	36, 217
RXM1SIDL	SID2	SID1	SID0	—	—	—	EID17	EID16	xxx- --xx	36, 217
RXM1SIDH	SID10	SID9	SID8	SID7	SID6	SID5	SID4	SID3	xxxx xxxx	36, 216
RXM0EIDL	EID7	EID6	EID5	EID4	EID3	EID2	EID1	EID0	xxxx xxxx	36, 217
RXM0EIDH	EID15	EID14	EID13	EID12	EID11	EID10	EID9	EID8	xxxx xxxx	36, 217
RXM0SIDL	SID2	SID1	SID0	—	—	—	EID17	EID16	xxx- --xx	36, 217
RXM0SIDH	SID10	SID9	SID8	SID7	SID6	SID5	SID4	SID3	xxxx xxxx	36, 216
RXF5EIDL	EID7	EID6	EID5	EID4	EID3	EID2	EID1	EID0	xxxx xxxx	36, 216
RXF5EIDH	EID15	EID14	EID13	EID12	EID11	EID10	EID9	EID8	xxxx xxxx	36, 216
RXF5SIDL	SID2	SID1	SID0	—	EXIDEN	—	EID17	EID16	xxx- x-xx	36, 215
RXF5SIDH	SID10	SID9	SID8	SID7	SID6	SID5	SID4	SID3	xxxx xxxx	36, 215
RXF4EIDL	EID7	EID6	EID5	EID4	EID3	EID2	EID1	EID0	xxxx xxxx	36, 216
RXF4EIDH	EID15	EID14	EID13	EID12	EID11	EID10	EID9	EID8	xxxx xxxx	36, 216
RXF4SIDL	SID2	SID1	SID0	—	EXIDEN	—	EID17	EID16	xxx- x-xx	36, 215
RXF4SIDH	SID10	SID9	SID8	SID7	SID6	SID5	SID4	SID3	xxxx xxxx	36, 215
RXF3EIDL	EID7	EID6	EID5	EID4	EID3	EID2	EID1	EID0	xxxx xxxx	36, 216
RXF3EIDH	EID15	EID14	EID13	EID12	EID11	EID10	EID9	EID8	xxxx xxxx	36, 216
RXF3SIDL	SID2	SID1	SID0	—	EXIDEN	—	EID17	EID16	xxx- x-xx	36, 215
RXF3SIDH	SID10	SID9	SID8	SID7	SID6	SID5	SID4	SID3	xxxx xxxx	36, 215
RXF2EIDL	EID7	EID6	EID5	EID4	EID3	EID2	EID1	EID0	xxxx xxxx	36, 216
RXF2EIDH	EID15	EID14	EID13	EID12	EID11	EID10	EID9	EID8	xxxx xxxx	36, 216
RXF2SIDL	SID2	SID1	SID0	—	EXIDEN	—	EID17	EID16	xxx- x-xx	36, 215
RXF2SIDH	SID10	SID9	SID8	SID7	SID6	SID5	SID4	SID3	xxxx xxxx	36, 215
RXF1EIDL	EID7	EID6	EID5	EID4	EID3	EID2	EID1	EID0	xxxx xxxx	36, 216
RXF1EIDH	EID15	EID14	EID13	EID12	EID11	EID10	EID9	EID8	xxxx xxxx	36, 216
RXF1SIDL	SID2	SID1	SID0	—	EXIDEN	—	EID17	EID16	xxx- x-xx	36, 215
RXF1SIDH	SID10	SID9	SID8	SID7	SID6	SID5	SID4	SID3	xxxx xxxx	36, 215
RXF0EIDL	EID7	EID6	EID5	EID4	EID3	EID2	EID1	EID0	xxxx xxxx	36, 216
RXF0EIDH	EID15	EID14	EID13	EID12	EID11	EID10	EID9	EID8	xxxx xxxx	36, 216
RXF0SIDL	SID2	SID1	SID0	—	EXIDEN	—	EID17	EID16	xxx- x-xx	36, 215
RXF0SIDH	SID10	SID9	SID8	SID7	SID6	SID5	SID4	SID3	xxxx xxxx	36, 215

Legend: x = unknown, u = unchanged, - = unimplemented, q = value depends on condition

Note 1: These registers or register bits are not implemented on the PIC18F248 and PIC18F258 and read as '0's.

2: Bit 21 of the TBLPTRU allows access to the device configuration bits.

3: RA6 and associated bits are configured as port pins in RCIO and ECIO Oscillator mode only and read '0' in all other Oscillator modes.

4.10 Access Bank

The Access Bank is an architectural enhancement that is very useful for C compiler code optimization. The techniques used by the C compiler are also useful for programs written in assembly.

This data memory region can be used for:

- Intermediate computational values
- Local variables of subroutines
- Faster context saving/switching of variables
- Common variables
- Faster evaluation/control of SFRs (no banking)

The Access Bank is comprised of the upper 160 bytes in Bank 15 (SFRs) and the lower 96 bytes in Bank 0. These two sections will be referred to as Access Bank High and Access Bank Low, respectively. Figure 4-6 indicates the Access Bank areas.

A bit in the instruction word specifies if the operation is to occur in the bank specified by the BSR register, or in the Access Bank.

When forced in the Access Bank (a = 0), the last address in Access Bank Low is followed by the first address in Access Bank High. Access Bank High maps most of the Special Function Registers so that these registers can be accessed without any software overhead.

4.11 Bank Select Register (BSR)

The need for a large general purpose memory space dictates a RAM banking scheme. The data memory is partitioned into sixteen banks. When using direct addressing, the BSR should be configured for the desired bank.

BSR<3:0> holds the upper 4 bits of the 12-bit RAM address. The BSR<7:4> bits will always read '0's, and writes will have no effect.

A MOVLB instruction has been provided in the instruction set to assist in selecting banks.

If the currently selected bank is not implemented, any read will return all '0's and all writes are ignored. The STATUS register bits will be set/cleared as appropriate for the instruction performed.

Each Bank extends up to FFh (256 bytes). All data memory is implemented as static RAM.

A MOVFF instruction ignores the BSR, since the 12-bit addresses are embedded into the instruction word.

Section 4.12 provides a description of indirect addressing, which allows linear addressing of the entire RAM space.

FIGURE 4-7: DIRECT ADDRESSING

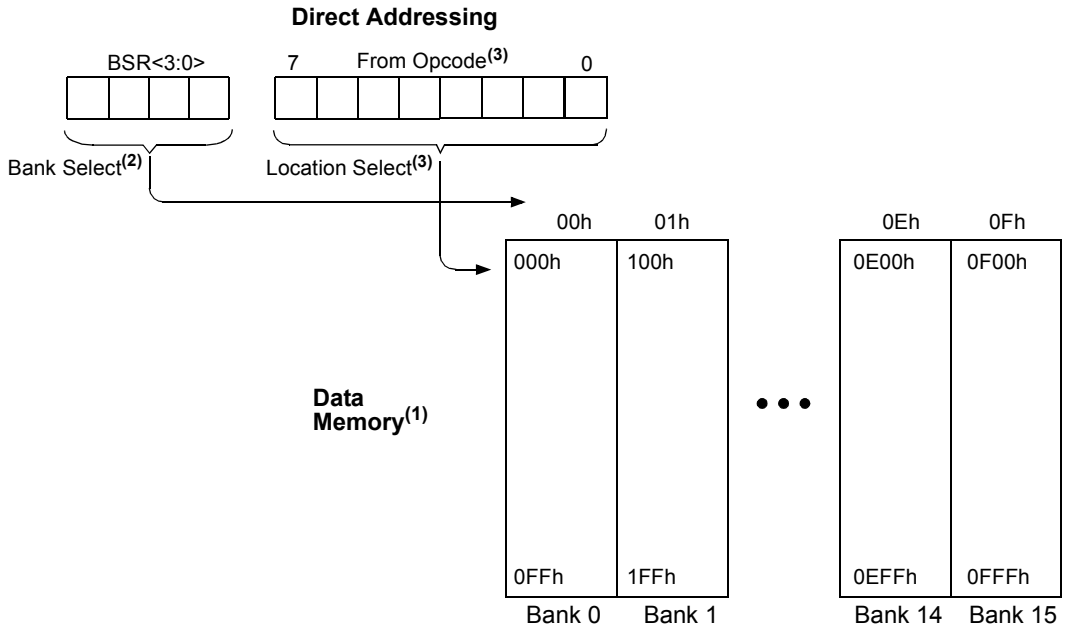

Note 1: For register file map detail, see Table 4-1.

2: The access bit of the instruction can be used to force an override of the selected bank (BSR<3:0>) to the registers of the Access Bank.

3: The MOVFF instruction embeds the entire 12-bit address in the instruction.

© 2003 Microchip Technology Inc.

4.12 Indirect Addressing, INDF and FSR Registers

Indirect addressing is a mode of addressing data memory, where the data memory address in the instruction is not fixed. A SFR register is used as a pointer to the data memory location that is to be read or written. Since this pointer is in RAM, the contents can be modified by the program. This can be useful for data tables in the data memory and for software stacks. Figure 4-8 shows the operation of indirect addressing. This shows the moving of the value to the data memory address specified by the value of the FSR register.

Indirect addressing is possible by using one of the INDF registers. Any instruction using the INDF register actually accesses the register indicated by the File Select Register, FSR. Reading the INDF register itself, indirectly (FSR = 0), will read 00h. Writing to the INDF register indirectly, results in a no operation. The FSR register contains a 12-bit address, which is shown in Figure 4-8.

The INDFn ($0 \leq n \leq 2$) register is not a physical register. Addressing INDFn actually addresses the register whose address is contained in the FSRn register (FSRn is a pointer). This is indirect addressing.

Example 4-5 shows a simple use of indirect addressing to clear the RAM in Bank 1 (locations 100h-1FFh) in a minimum number of instructions.

EXAMPLE 4-5: HOW TO CLEAR RAM (BANK 1) USING INDIRECT ADDRESSING

```
        LFSR    FSR0, 100h ;
NEXT    CLRF    POSTINC0    ; Clear INDF
                            ; register
                            ; & inc pointer
        BTFSS   FSR0H, 1    ; All done
                            ; w/ Bank1?
        BRA     NEXT        ; NO, clear next
CONTINUE                    ;
    :                       ; YES, continue
```

There are three indirect addressing registers. To address the entire data memory space (4096 bytes), these registers are 12-bits wide. To store the 12 bits of addressing information, two 8-bit registers are required. These indirect addressing registers are:

1. FSR0: composed of FSR0H:FSR0L
2. FSR1: composed of FSR1H:FSR1L
3. FSR2: composed of FSR2H:FSR2L

In addition, there are registers INDF0, INDF1 and INDF2, which are not physically implemented. Reading or writing to these registers activates indirect addressing, with the value in the corresponding FSR register being the address of the data.

If an instruction writes a value to INDF0, the value will be written to the address indicated by FSR0H:FSR0L. A read from INDF1 reads the data from the address indicated by FSR1H:FSR1L. INDFn can be used in code anywhere an operand can be used.

If INDF0, INDF1 or INDF2 are read indirectly via an FSR, all '0's are read (zero bit is set). Similarly, if INDF0, INDF1 or INDF2 are written to indirectly, the operation will be equivalent to a NOP instruction and the STATUS bits are not affected.

4.12.1 INDIRECT ADDRESSING OPERATION

Each FSR register has an INDF register associated with it, plus four additional register addresses. Performing an operation on one of these five registers determines how the FSR will be modified during indirect addressing.

- When data access is done to one of the five INDFn locations, the address selected will configure the FSRn register to:
  - Do nothing to FSRn after an indirect access (no change) - INDFn
  - Auto-decrement FSRn after an indirect access (post-decrement) - POSTDECn
  - Auto-increment FSRn after an indirect access (post-increment) - POSTINCn
  - Auto-increment FSRn before an indirect access (pre-increment) - PREINCn
  - Use the value in the WREG register as an offset to FSRn. Do not modify the value of the WREG or the FSRn register after an indirect access (no change) - PLUSWn

When using the auto-increment or auto-decrement features, the effect on the FSR is not reflected in the STATUS register. For example, if the indirect address causes the FSR to equal '0', the Z bit will not be set.

Incrementing or decrementing an FSR affects all 12 bits. That is, when FSRnL overflows from an increment, FSRnH will be incremented automatically.

Adding these features allows the FSRn to be used as a software stack pointer, in addition to its uses for table operations in data memory.

Each FSR has an address associated with it that performs an indexed indirect access. When a data access to this INDFn location (PLUSWn) occurs, the FSRn is configured to add the 2's complement value in the WREG register and the value in FSR to form the address before an indirect access. The FSR value is not changed.

If an FSR register contains a value that indicates one of the INDFn, an indirect read will read 00h (zero bit is set), while an indirect write will be equivalent to a NOP (STATUS bits are not affected).

If an indirect addressing operation is done where the target address is an FSRnH or FSRnL register, the write operation will dominate over the pre- or post-increment/decrement functions.

FIGURE 4-8: INDIRECT ADDRESSING

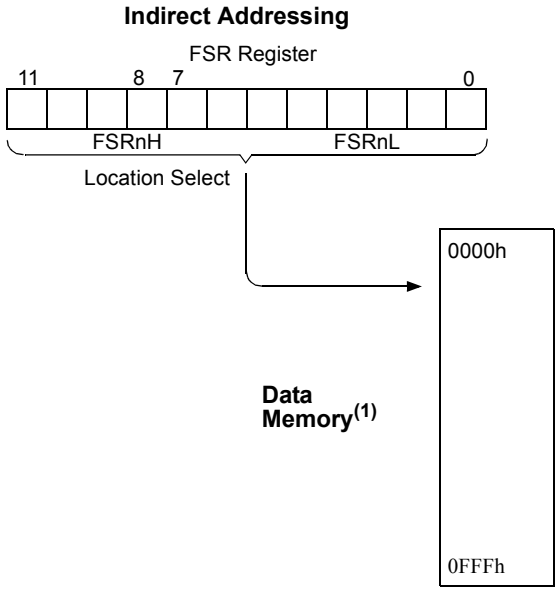

Note 1: For register file map detail, see Table 4-1.

© 2003 Microchip Technology Inc.

4.13 STATUS Register

The STATUS register, shown in Register 4-2, contains the arithmetic status of the ALU. The STATUS register can be the destination for any instruction, as with any other register. If the STATUS register is the destination for an instruction that affects the Z, DC, C, OV, or N bits, then the write to these five bits is disabled. These bits are set or cleared according to the device logic. Therefore, the result of an instruction with the STATUS register as destination may be different than intended.

For example, `CLRF STATUS` will clear the upper three bits and set the Z bit. This leaves the STATUS register as `000u u1uu` (where `u` = unchanged).

It is recommended, therefore, that only `BCF`, `BSF`, `SWAPF`, `MOVFF` and `MOVWF` instructions are used to alter the STATUS register, because these instructions do not affect the Z, C, DC, OV, or N bits from the STATUS register. For other instructions which do not affect the status bits, see Table 25-2.

Note:	The C and DC bits operate as a $\overline{\text{borrow}}$ and digit borrow bit respectively, in subtraction.

REGISTER 4-2: STATUS REGISTER

U-0	U-0	U-0	R/W-x	R/W-x	R/W-x	R/W-x	R/W-x
—	—	—	N	OV	Z	DC	C
bit 7							bit 0

bit 7-5 **Unimplemented:** Read as '0'

bit 4 **N:** Negative bit

This bit is used for signed arithmetic (2's complement). It indicates whether the result of the ALU operation was negative (ALU MSb = `1`).

`1` = Result was negative
`0` = Result was positive

bit 3 **OV:** Overflow bit

This bit is used for signed arithmetic (2's complement). It indicates an overflow of the 7-bit magnitude, which causes the sign bit (bit 7) to change state.

`1` = Overflow occurred for signed arithmetic (in this arithmetic operation)
`0` = No overflow occurred

bit 2 **Z:** Zero bit

`1` = The result of an arithmetic or logic operation is zero
`0` = The result of an arithmetic or logic operation is not zero

bit 1 **DC:** Digit carry/$\overline{\text{borrow}}$ bit

For `ADDWF`, `ADDLW`, `SUBLW`, and `SUBWF` instructions

`1` = A carry-out from the 4th low order bit of the result occurred
`0` = No carry-out from the 4th low order bit of the result

Note: For $\overline{\text{borrow}}$, the polarity is reversed. A subtraction is executed by adding the 2's complement of the second operand. For rotate (`RRCF`, `RRNCF`, `RLCF`, and `RLNCF`) instructions, this bit is loaded with either the bit 4 or bit 3 of the source register.

bit 0 **C:** Carry/$\overline{\text{borrow}}$ bit

For `ADDWF`, `ADDLW`, `SUBLW`, and `SUBWF` instructions
`1` = A carry-out from the Most Significant bit of the result occurred
`0` = No carry-out from the Most Significant bit of the result occurred

Note: For $\overline{\text{borrow}}$, the polarity is reversed. A subtraction is executed by adding the 2's complement of the second operand. For rotate (`RRF`, `RLF`) instructions, this bit is loaded with either the high or low order bit of the source register.

Legend:			
R = Readable bit	W = Writable bit	U = Unimplemented bit, read as '0'	
- n = Value at POR	'1' = Bit is set	'0' = Bit is cleared	x = Bit is unknown

4.14 RCON Register

The Reset Control (RCON) register contains flag bits that allow differentiation between the sources of a device RESET. These flags include the $\overline{TO}$, $\overline{PD}$, $\overline{POR}$, $\overline{BOR}$ and $\overline{RI}$ bits. This register is readable and writable.

Note 1: If the BOREN configuration bit is set, $\overline{BOR}$ is '1' on Power-on Reset. If the BOREN configuration bit is clear, $\overline{BOR}$ is unknown on Power-on Reset.
The $\overline{BOR}$ status bit is a "don't care" and is not necessarily predictable if the brown-out circuit is disabled (the BOREN configuration bit is clear). $\overline{BOR}$ must then be set by the user and checked on subsequent RESETS to see if it is clear, indicating a brown-out has occurred.

2: It is recommended that the $\overline{POR}$ bit be set after a Power-on Reset has been detected, so that subsequent Power-on Resets may be detected.

REGISTER 4-3: RCON REGISTER

R/W-0	U-0	U-0	R/W-1	R-1	R-1	R/W-0	R/W-0
IPEN	—	—	$\overline{RI}$	$\overline{TO}$	$\overline{PD}$	$\overline{POR}$	$\overline{BOR}$
bit 7							bit 0

bit 7 **IPEN:** Interrupt Priority Enable bit
1 = Enable priority levels on interrupts
0 = Disable priority levels on interrupts (16CXXX Compatibility mode)

bit 6-5 **Unimplemented:** Read as '0'

bit 4 **$\overline{RI}$:** RESET Instruction Flag bit
1 = The RESET instruction was not executed
0 = The RESET instruction was executed causing a device RESET
(must be set in software after a Brown-out Reset occurs)

bit 3 **$\overline{TO}$:** Watchdog Time-out Flag bit
1 = After power-up, CLRWDT instruction, or SLEEP instruction
0 = A WDT time-out occurred

bit 2 **$\overline{PD}$:** Power-down Detection Flag bit
1 = After power-up or by the CLRWDT instruction
0 = By execution of the SLEEP instruction

bit 1 **$\overline{POR}$:** Power-on Reset Status bit
1 = A Power-on Reset has not occurred
0 = A Power-on Reset occurred (must be set in software after a Power-on Reset occurs)

bit 0 **$\overline{BOR}$:** Brown-out Reset Status bit
1 = A Brown-out Reset has not occurred
0 = A Brown-out Reset occurred (must be set in software after a Brown-out Reset occurs)

Legend:			
R = Readable bit	W = Writable bit	U = Unimplemented bit, read as '0'	
- n = Value at POR	'1' = Bit is set	'0' = Bit is cleared	x = Bit is unknown

© 2003 Microchip Technology Inc.

5.0 DATA EEPROM MEMORY

The Data EEPROM is readable and writable during normal operation over the entire VDD range. The data memory is not directly mapped in the register file space. Instead, it is indirectly addressed through the Special Function Registers (SFR).

There are four SFRs used to read and write the program and data EEPROM memory. These registers are:

- EECON1
- EECON2
- EEDATA
- EEADR

The EEPROM data memory allows byte read and write. When interfacing to the data memory block, EEDATA holds the 8-bit data for read/write and EEADR holds the address of the EEPROM location being accessed. The PIC18FXX8 devices have 256 bytes of data EEPROM, with an address range from 00h to FFh.

The EEPROM data memory is rated for high erase/write cycles. A byte write automatically erases the location and writes the new data (erase-before-write). The write time is controlled by an on-chip timer. The write time will vary with voltage and temperature, as well as from chip-to-chip. Please refer to the specifications for exact limits.

5.1 EEADR Register

The address register can address up to a maximum of 256 bytes of data EEPROM.

5.2 EECON1 and EECON2 Registers

EECON1 is the control register for EEPROM memory accesses.

EECON2 is not a physical register. Reading EECON2 will read all '0's. The EECON2 register is used exclusively in the EEPROM write sequence.

Control bits $\overline{RD}$ and $\overline{WR}$ initiate read and write operations, respectively. These bits cannot be cleared, only set, in software. They are cleared in hardware at the completion of the read or write operation. The inability to clear the $\overline{WR}$ bit in software prevents the accidental or premature termination of a write operation.

The WREN bit, when set, will allow a write operation. On power-up, the WREN bit is clear. The WRERR bit is set when a write operation is interrupted by a $\overline{MCLR}$ Reset, or a WDT Time-out Reset, during normal operation. In these situations, the user can check the WRERR bit and rewrite the location. It is necessary to reload the data and address registers (EEDATA and EEADR), due to the RESET condition forcing the contents of the registers to zero.

Note:	Interrupt flag bit, EEIF in the PIR2 register, is set when write is complete. It must be cleared in software.

REGISTER 5-1: EECON1 REGISTER

R/W-x	R/W-x	U-0	R/W-0	R/W-x	R/W-0	R/S-0	R/S-0
EEPGD	CFGS	—	FREE	WRERR	WREN	$\overline{WR}$	$\overline{RD}$
bit 7							bit 0

bit 7 **EEPGD:** FLASH Program or Data EEPROM Memory Select bit
1 = Access program FLASH memory
0 = Access data EEPROM memory

bit 6 **CFGS:** FLASH Program/Data EE or Configuration Select bit
1 = Access configuration registers
0 = Access program FLASH or data EEPROM memory

bit 5 **Unimplemented:** Read as '0'

bit 4 **FREE:** FLASH Row Erase Enable bit
1 = Erase the program memory row addressed by TBLPTR on the next $\overline{WR}$ command (reset by hardware)
0 = Perform write only

bit 3 **WRERR:** Write Error Flag bit
1 = A write operation is prematurely terminated (any $\overline{MCLR}$ or any WDT Reset during self-timed programming in normal operation)
0 = The write operation completed

Note: When a WRERR occurs, the EEPGD or FREE bits are not cleared. This allows tracing of the error condition.

bit 2 **WREN:** Write Enable bit
1 = Allows write cycles
0 = Inhibits write to the EEPROM or FLASH memory

bit 1 **$\overline{WR}$:** Write Control bit
1 = Initiates a data EEPROM erase/write cycle or a program memory erase cycle or write cycle (The operation is self-timed and the bit is cleared by hardware once write is complete. The $\overline{WR}$ bit can only be set (not cleared) in software.)
0 = Write cycle is complete

bit 0 **$\overline{RD}$:** Read Control bit
1 = Initiates an EEPROM read (Read takes one cycle. $\overline{RD}$ is cleared in hardware. The $\overline{RD}$ bit can only be set (not cleared) in software. $\overline{RD}$ bit cannot be set when EEPGD = 1.)
0 = Does not initiate an EEPROM read

Legend:			
R = Readable bit	W = Writable bit	S = Settable bit	U = Unimplemented bit, read as '0'
- n = Value at POR	'1' = Bit is set	'0' = Bit is cleared	x = Bit is unknown

© 2003 Microchip Technology Inc.

5.3 Reading the Data EEPROM Memory

To read a data memory location, the user must write the address to the EEADR register, clear the EEPGD and CFGS control bits (EECON1<7:6>) and then set control bit RD (EECON1<0>). The data is available in the very next instruction cycle of the EEDATA register; therefore, it can be read by the next instruction. EEDATA will hold this value until another read operation, or until it is written to by the user (during a write operation).

EXAMPLE 5-1: DATA EEPROM READ

```
MOVLW   DATA_EE_ADDR    ;
MOVWF   EEADR           ;Data Memory Address
                        ;to read
BCF     EECON1, EEPGD   ;Point to DATA memory
BCS     EECON1, CFGS    ;
BSF     EECON1, RD      ;EEPROM Read
MOVF    EEDATA, W       ;W = EEDATA
```

5.4 Writing to the Data EEPROM Memory

To write an EEPROM data location, the address must first be written to the EEADR register and the data written to the EEDATA register. Then, the sequence in Example 5-2 must be followed to initiate the write cycle.

The write will not initiate if the above sequence is not exactly followed (write 55h to EECON2, write 0AAh to EECON2, then set WR bit) for each byte. It is strongly recommended that interrupts be disabled during this code segment.

Additionally, the WREN bit in EECON1 must be set to enable writes. This mechanism prevents accidental writes to data EEPROM due to unexpected code execution (i.e., runaway programs). The WREN bit should be kept clear at all times, except when updating the EEPROM. The WREN bit is not cleared by hardware.

After a write sequence has been initiated, clearing the WREN bit will not affect the current write cycle. The WR bit will be inhibited from being set unless the WREN bit is set. The WREN bit must be set on a previous instruction. Both WR and WREN cannot be set with the same instruction.

At the completion of the write cycle, the WR bit is cleared in hardware and the EEPROM Write Complete Interrupt Flag bit (EEIF) is set. The user may either enable this interrupt, or roll this bit. EEIF must be cleared by software.

EXAMPLE 5-2: DATA EEPROM WRITE

```
                MOVLW   DATA_EE_ADDR    ;
                MOVWF   EEADR           ; Data Memory Address to read
                MOVLW   DATA_EE_DATA    ;
                MOVWF   EEDATA          ; Data Memory Value to write
                BCF     EECON1, EEPGD   ; Point to DATA memory
                BCF     EECON1, CFGS    ; Access program FLASH or Data EEPROM memory
                BSF     EECON1, WREN    ; Enable writes

                BCF     INTCON, GIE     ; Disable interrupts
  Required      MOVLW   55h             ;
  Sequence      MOVWF   EECON2          ; Write 55h
                MOVLW   0AAh            ;
                MOVWF   EECON2          ; Write AAh
                BSF     EECON1, WR      ; Set WR bit to begin write
                BSF     INTCON, GIE     ; Enable interrupts

                .                       ; user code execution
                .
                .
                BCF     EECON1, WREN    ; Disable writes on write complete (EEIF set)
```

5.5 Write Verify

Depending on the application, good programming practice may dictate that the value written to the memory should be verified against the original value. This should be used in applications where excessive writes can stress bits near the specification limit.

Generally, a write failure will be a bit which was written as a '1', but reads back as a '0' (due to leakage off the cell).

5.6 Protection Against Spurious Write

There are conditions when the device may not want to write to the data EEPROM memory. To protect against spurious EEPROM writes, various mechanisms have been built-in. On power-up, the WREN bit is cleared. Also, the Power-up Timer (72 ms duration) prevents EEPROM write.

The write initiate sequence and the WREN bit together reduce the probability of an accidental write during brown-out, power glitch, or software malfunction.

5.7 Operation During Code Protect

Data EEPROM memory has its own code protect mechanism. External read and write operations are disabled if either of these mechanisms are enabled.

The microcontroller itself can both read and write to the internal data EEPROM, regardless of the state of the code protect configuration bit. Refer to Section 24.0, Special Features of the CPU for additional information.

5.8 Using the Data EEPROM

The data EEPROM is a high-endurance, byte addressable array that has been optimized for the storage of frequently changing information (e.g., program variables or other data that are updated often). Frequently changing values will typically be updated more often than specification D124 or D124A. If this is not the case, an array refresh must be performed. For this reason, variables that change infrequently (such as constants, IDs, calibration, etc.) should be stored in FLASH program memory. A simple data EEPROM refresh routine is shown in Example 5-3.

Note:	If Data EEPROM is only used to store constants and/or data that changes rarely, an array refresh is likely not required. See specification D124 or D124A.

EXAMPLE 5-3: DATA EEPROM REFRESH ROUTINE

```
       CLRF    EEADR             ; Start at address 0
       BCF     EECON1,CFGS       ; Set for memory
       BCF     EECON1,EEPGD      ; Set for Data EEPROM
       BCF     INTCON,GIE        ; Disable interrupts
       BSF     EECON1,WREN       ; Enable writes
Loop                             ; Loop to refresh array
       BSF     EECON1,RD         ; Read current address
       MOVLW   55h               ;
       MOVWF   EECON2            ; Write 55h
       MOVLW   0AAh              ;
       MOVWF   EECON2            ; Write AAh
       BSF     EECON1,WR         ; Set WR bit to begin write
       BTFSC   EECON1,WR         ; Wait for write to complete
       BRA     $-2

       INCFSZ  EEADR,F           ; Increment address
       BRA     Loop              ; Not zero, do it again

       BCF     EECON1,WREN       ; Disable writes
       BSF     INTCON,GIE        ; Enable interrupts
```


© 2003 Microchip Technology Inc.

TABLE 5-1: REGISTERS ASSOCIATED WITH DATA EEPROM MEMORY

Name	Bit 7	Bit 6	Bit 5	Bit 4	Bit 3	Bit 2	Bit 1	Bit 0	Value on: POR, BOR	Value on all other RESETS
INTCON	GIE/GIEH	PEIE/GIEL	TMR0IE	INT0IE	RBIE	TMR0IF	INT0IF	RBIF	0000 000x	0000 000u
EEADR	EEPROM Address Register								xxxx xxxx	uuuu uuuu
EEDATA	EEPROM Data Register								xxxx xxxx	uuuu uuuu
EECON2	EEPROM Control Register2 (not a physical register)								—	—
EECON1	EEPGD	CFGS	—	FREE	WRERR	WREN	$\overline{WR}$	$\overline{RD}$	xx-0 x000	uu-0 u000
IPR2	—	CMIP	—	EEIP	BCLIP	LVDIP	TMR3IP	ECCP1IP	-1-1 1111	-1-1 1111
PIR2	—	CMIF	—	EEIF	BCLIF	LVDIF	TMR3IF	ECCP1IF	-0-0 0000	-0-0 0000
PIE2	—	CMIE	—	EEIE	BCLIE	LVDIE	TMR3IE	ECCP1IE	-0-0 0000	-0-0 0000

Legend: x = unknown, u = unchanged, r = reserved, - = unimplemented, read as '0'.
Shaded cells are not used during FLASH/EEPROM access.

NOTES:

© 2003 Microchip Technology Inc.

6.0 FLASH PROGRAM MEMORY

The FLASH Program Memory is readable, writable, and erasable during normal operation over the entire VDD range.

A read from program memory is executed on one byte at a time. A write to program memory is executed on blocks of 8 bytes at a time. Program memory is erased in blocks of 64 bytes at a time. A bulk erase operation may not be issued from user code.

Writing or erasing program memory will cease instruction fetches until the operation is complete. The program memory cannot be accessed during the write or erase, therefore, code cannot execute. An internal programming timer terminates program memory writes and erases.

A value written to program memory does not need to be a valid instruction. Executing a program memory location that forms an invalid instruction results in a NOP.

6.1 Table Reads and Table Writes

In order to read and write program memory, there are two operations that allow the processor to move bytes between the program memory space and the data RAM:

- Table Read (TBLRD)
- Table Write (TBLWT)

The program memory space is 16-bits wide, while the data RAM space is 8-bits wide. Table Reads and Table Writes move data between these two memory spaces through an 8-bit register (TABLAT).

Table Read operations retrieve data from program memory and places it into the data RAM space. Figure 6-1 shows the operation of a Table Read with program memory and data RAM.

Table Write operations store data from the data memory space into holding registers in program memory. The procedure to write the contents of the holding registers into program memory is detailed in Section 6.5, Writing to FLASH Program Memory. Figure 6-2 shows the operation of a Table Write with program memory and data RAM.

Table operations work with byte entities. A table block containing data, rather than program instructions, is not required to be word aligned. Therefore, a table block can start and end at any byte address. If a Table Write is being used to write executable code into program memory, program instructions will need to be word aligned.

FIGURE 6-1: TABLE READ OPERATION

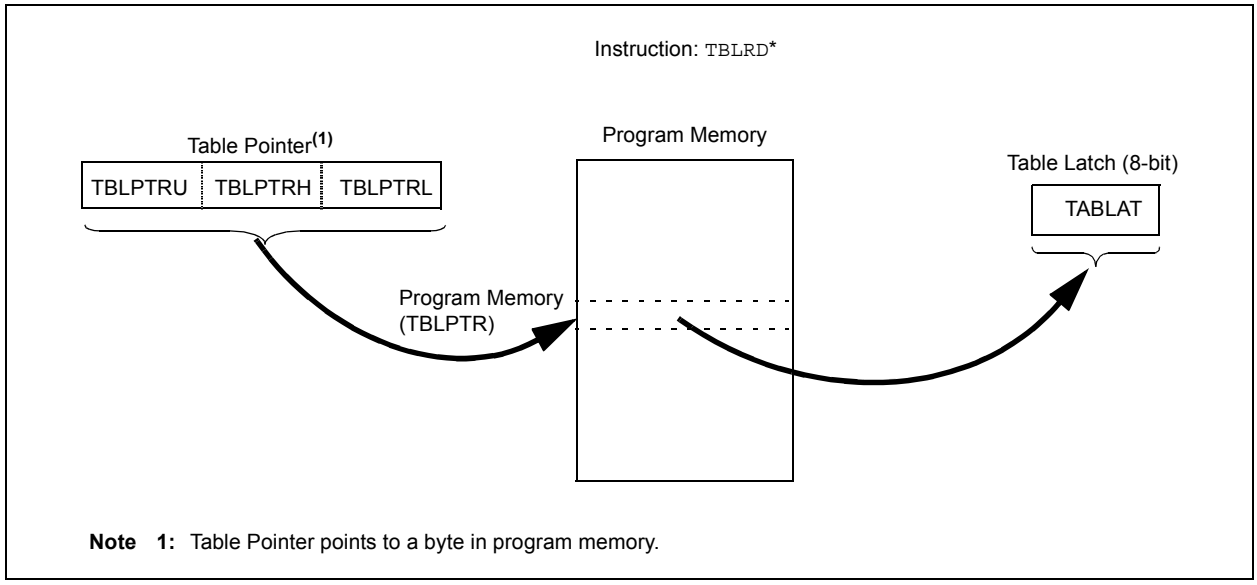

Note 1: Table Pointer points to a byte in program memory.

FIGURE 6-2: TABLE WRITE OPERATION

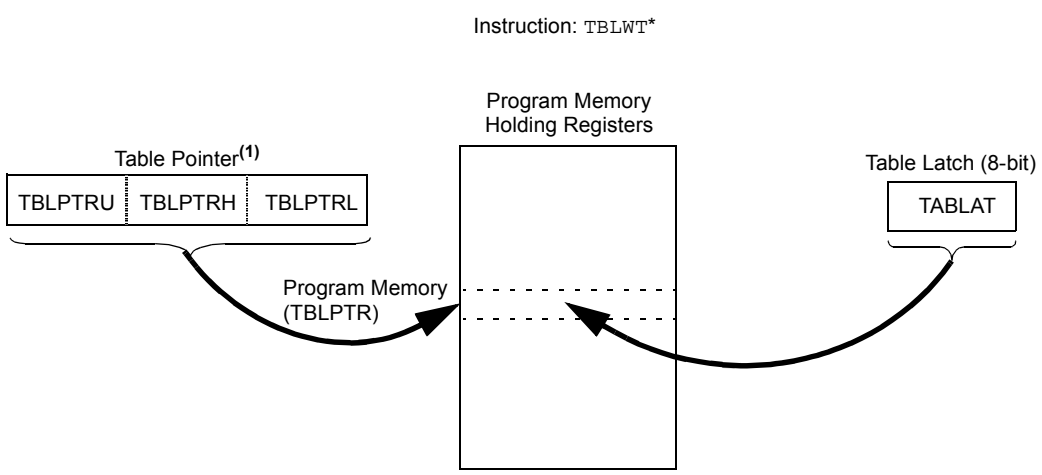

Note 1: Table Pointer actually points to one of eight holding registers, the address of which is determined by TBLPTRL<2:0>. The process for physically writing data to the Program Memory Array is discussed in Section 6.5.

6.2 Control Registers

Several control registers are used in conjunction with the TBLRD and TBLWT instructions. These include the:

- EECON1 register
- EECON2 register
- TABLAT register
- TBLPTR registers

6.2.1 EECON1 AND EECON2 REGISTERS

EECON1 is the control register for memory accesses.

EECON2 is not a physical register. Reading EECON2 will read all '0's. The EECON2 register is used exclusively in the memory write and erase sequences.

Control bit EEPGD determines if the access will be a program or data EEPROM memory access. When clear, any subsequent operations will operate on the data EEPROM memory. When set, any subsequent operations will operate on the program memory.

Control bit CFGS determines if the access will be to the configuration/calibration registers or to program memory/data EEPROM memory. When set, subsequent operations will operate on configuration registers, regardless of EEPGD (see Section 24.0, Special Features of the CPU). When clear, memory selection access is determined by EEPGD.

The FREE bit, when set, will allow a program memory erase operation. When the FREE bit is set, the erase operation is initiated on the next $\overline{WR}$ command. When FREE is clear, only writes are enabled.

The WREN bit, when set, will allow a write operation. On power-up, the WREN bit is clear. The WRERR bit is set when a write operation is interrupted by a $\overline{MCLR}$ Reset or a WDT Time-out Reset during normal operation. In these situations, the user can check the WRERR bit and rewrite the location. It is necessary to reload the data and address registers (EEDATA and EEADR), due to RESET values of zero.

Control bits $\overline{RD}$ and $\overline{WR}$ initiate read and write operations, respectively. These bits cannot be cleared, only set, in software. They are cleared in hardware at the completion of the read or write operation. The inability to clear the $\overline{WR}$ bit in software prevents the accidental or premature termination of a write operation. The $\overline{RD}$ bit cannot be set when accessing program memory (EEPGD = 1).

Note:	Interrupt flag bit, EEIF in the PIR2 register, is set when write is complete. It must be cleared in software.

© 2003 Microchip Technology Inc.

REGISTER 6-1: EECON1 REGISTER

R/W-x	R/W-x	U-0	R/W-0	R/W-x	R/W-0	R/S-0	R/S-0
EEPGD	CFGS	—	FREE	WRERR	WREN	$\overline{WR}$	$\overline{RD}$
bit 7							bit 0

bit 7 **EEPGD:** FLASH Program or Data EEPROM Memory Select bit
1 = Access program FLASH memory
0 = Access data EEPROM memory

bit 6 **CFGS:** FLASH Program/Data EE or Configuration Select bit
1 = Access configuration registers
0 = Access program FLASH or data EEPROM memory

bit 5 **Unimplemented:** Read as '0'

bit 4 **FREE:** FLASH Row Erase Enable bit
1 = Erase the program memory row addressed by TBLPTR on the next $\overline{WR}$ command (cleared by completion of erase operation)
0 = Perform write only

bit 3 **WRERR:** Write Error Flag bit
1 = A write operation is prematurely terminated (any $\overline{MCLR}$ or any WDT Reset during self-timed programming in normal operation)
0 = The write operation completed

Note: When a WRERR occurs, the EEPGD and CFGS bits are not cleared. This allows tracing of the error condition.

bit 2 **WREN:** Write Enable bit
1 = Allows write cycles
0 = Inhibits write to the EEPROM or FLASH memory

bit 1 **$\overline{WR}$:** Write Control bit
1 = Initiates a data EEPROM erase/write cycle or a program memory erase cycle or write cycle (The operation is self-timed and the bit is cleared by hardware once write is complete. The $\overline{WR}$ bit can only be set (not cleared) in software.)
0 = Write cycle to the EEPROM is complete

bit 0 **$\overline{RD}$:** Read Control bit
1 = Initiates an EEPROM read (Read takes one cycle. $\overline{RD}$ is cleared in hardware. The $\overline{RD}$ bit can only be set (not cleared) in software. $\overline{RD}$ bit cannot be set when EEPGD = 1.)
0 = Does not initiate an EEPROM read

Legend:			
R = Readable bit	W = Writable bit	S = Settable bit	U = Unimplemented bit, read as '0'
- n = Value at POR	'1' = Bit is set	'0' = Bit is cleared	x = Bit is unknown

6.2.2 TABLAT - TABLE LATCH REGISTER

The Table Latch (TABLAT) is an 8-bit register mapped into the SFR space. The Table Latch is used to hold 8-bit data during data transfers between program memory and data RAM.

6.2.3 TBLPTR - TABLE POINTER REGISTER

The Table Pointer (TBLPTR) addresses a byte within the program memory. The TBLPTR is comprised of three SFR registers: Table Pointer Upper Byte, Table Pointer High Byte and Table Pointer Low Byte (TBLPTRU:TBLPTRH:TBLPTRL). These three registers join to form a 22-bit wide pointer. The low order 21 bits allow the device to address up to 2 Mbytes of program memory space. The 22nd bit allows access to the Device ID, the User ID and the Configuration bits.

The table pointer, TBLPTR, is used by the `TBLRD` and `TBLWT` instructions. These instructions can update the TBLPTR in one of four ways, based on the table operation. These operations are shown in Table 6-1. These operations on the TBLPTR only affect the low order 21 bits.

6.2.4 TABLE POINTER BOUNDARIES

TBLPTR is used in reads, writes, and erases of the FLASH program memory.

When a `TBLRD` is executed, all 22 bits of the Table Pointer determine which byte is read from program memory into TABLAT.

When a `TBLWT` is executed, the three LSbs of the Table Pointer (TBLPTR<2:0>) determine which of the eight program memory holding registers is written to. When the timed write to program memory (long write) begins, the 19 MSbs of the Table Pointer, TBLPTR (TBLPTR<21:3>), will determine which program memory block of 8 bytes is written to. For more detail, see Section 6.5,Writing to FLASH Program Memory.

When an erase of program memory is executed, the 16 MSbs of the Table Pointer (TBLPTR<21:6>) point to the 64-byte block that will be erased. The Least Significant bits (TBLPTR<5:0>) are ignored.

Figure 6-3 describes the relevant boundaries of TBLPTR based on FLASH program memory operations.

TABLE 6-1: TABLE POINTER OPERATIONS WITH `TBLRD` AND `TBLWT` INSTRUCTIONS

Example	Operation on Table Pointer
`TBLRD*` `TBLWT*`	TBLPTR is not modified
`TBLRD*+` `TBLWT*+`	TBLPTR is incremented after the read/write
`TBLRD*-` `TBLWT*-`	TBLPTR is decremented after the read/write
`TBLRD+*` `TBLWT+*`	TBLPTR is incremented before the read/write

FIGURE 6-3: TABLE POINTER BOUNDARIES BASED ON OPERATION

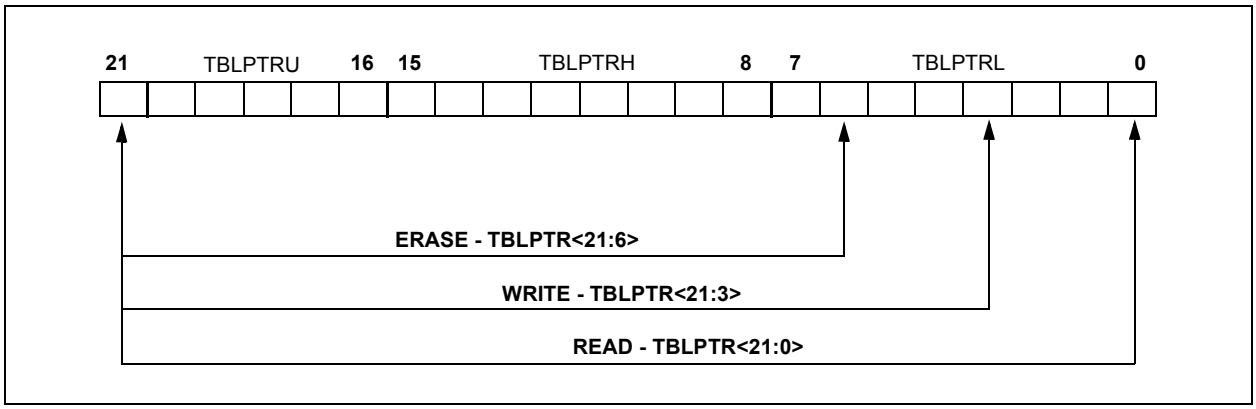

© 2003 Microchip Technology Inc.

6.3 Reading the FLASH Program Memory

The TBLRD instruction is used to retrieve data from program memory and places it into data RAM. Table Reads from program memory are performed one byte at a time.

TBLPTR points to a byte address in program space. Executing TBLRD places the byte pointed to into TABLAT. In addition, TBLPTR can be modified automatically for the next Table Read operation.

The internal program memory is typically organized by words. The Least Significant bit of the address selects between the high and low bytes of the word. Figure 6-4 shows the interface between the internal program memory and the TABLAT.

FIGURE 6-4: READS FROM FLASH PROGRAM MEMORY

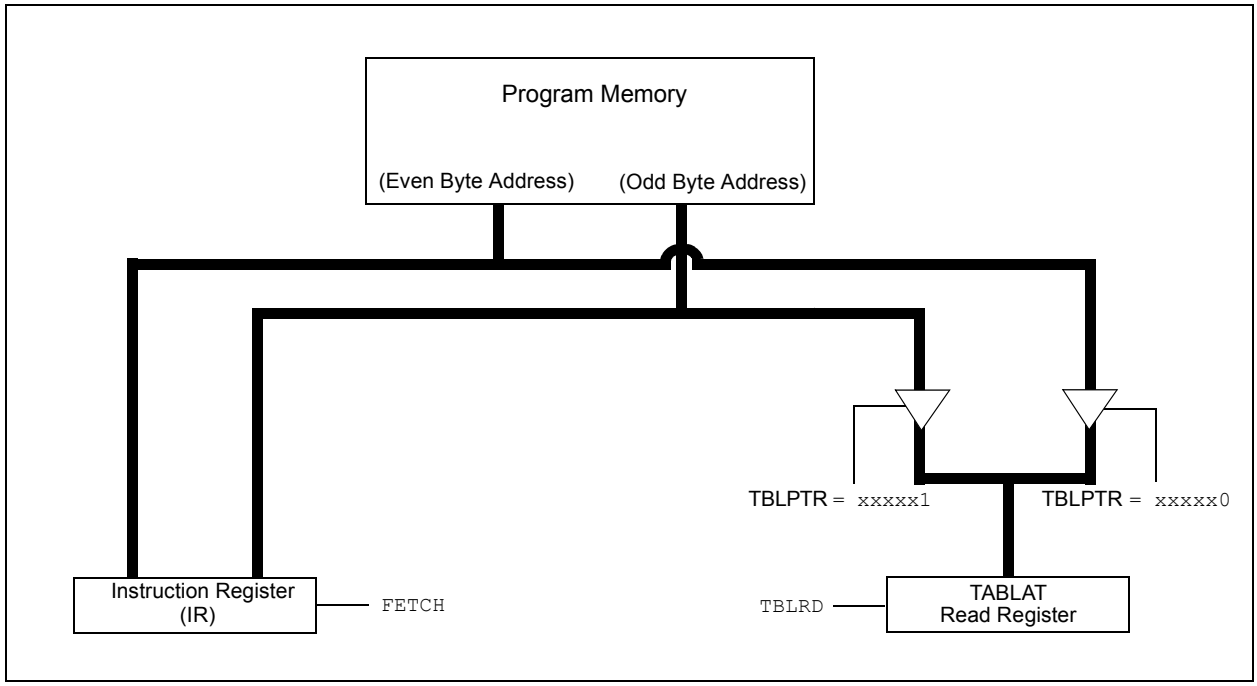

EXAMPLE 6-1: READING A FLASH PROGRAM MEMORY WORD

```
            MOVLW CODE_ADDR_UPPER          ; Load TBLPTR with the base
            MOVWF TBLPTRU                  ; address of the word
            MOVLW CODE_ADDR_HIGH
            MOVWF TBLPTRH
            MOVLW CODE_ADDR_LOW
            MOVWF TBLPTRL
READ_WORD
            TBLRD*+                        ; read into TABLAT and increment
            MOVF TABLAT, W                 ; get data
            MOVWF WORD_LSB
            TBLRD*+                        ; read into TABLAT and increment
            MOVF TABLAT, W                 ; get data
            MOVWF WORD_MSB
```

6.4 Erasing FLASH Program memory

The minimum erase block is 32 words or 64 bytes. Only through the use of an external programmer, or through ICSP control, can larger blocks of program memory be bulk erased. Word erase in the FLASH array is not supported.

When initiating an erase sequence from the microcontroller itself, a block of 64 bytes of program memory is erased. The Most Significant 16 bits of the TBLPTR<21:6> point to the block being erased. TBLPTR<5:0> are ignored.

The EECON1 register commands the erase operation. The EEPGD bit must be set to point to the FLASH program memory. The WREN bit must be set to enable write operations. The FREE bit is set to select an erase operation.

For protection, the write initiate sequence for EECON2 must be used.

A long write is necessary for erasing the internal FLASH. Instruction execution is halted while in a long write cycle. The long write will be terminated by the internal programming timer.

6.4.1 FLASH PROGRAM MEMORY ERASE SEQUENCE

The sequence of events for erasing a block of internal program memory location is:

1. Load table pointer with address of row being erased.
2. Set the EECON1 register for the erase operation:
   - set the EEPGD bit to point to program memory;
   - clear the CFGS bit to access program memory;
   - set the WREN bit to enable writes;
   - set the FREE bit to enable the erase.
3. Disable interrupts.
4. Write 55h to EECON2.
5. Write 0AAh to EECON2.
6. Set the $\overline{WR}$ bit. This will begin the row erase cycle.
7. The CPU will stall for duration of the erase (about 2 ms using internal timer).
8. Re-enable interrupts.

EXAMPLE 6-2: ERASING A FLASH PROGRAM MEMORY ROW

```
                MOVLW   upper (CODE_ADDR)      ; load TBLPTR with the base
                MOVWF   TBLPTRU                ; address of the memory block
                MOVLW   high (CODE_ADDR)
                MOVWF   TBLPTRH
                MOVLW   low (CODE_ADDR)
                MOVWF   TBLPTRL
    ERASE_ROW
                BSF     EECON1,EEPGD           ; point to FLASH program memory
                BCF     EECON1,CFGS            ; access FLASH program memory
                BSF     EECON1,WREN            ; enable write to memory
                BSF     EECON1,FREE            ; enable Row Erase operation
                BCF     INTCON,GIE             ; disable interrupts
                MOVLW   55h
                MOVWF   EECON2                 ; write 55H
Required        MOVLW   0AAh
Sequence        MOVWF   EECON2                 ; write 0AAH
                BSF     EECON1,WR              ; start erase (CPU stall)
                NOP                            ; NOP needed for proper code execution
                BSF     INTCON,GIE             ; re-enable interrupts
```


© 2003 Microchip Technology Inc.

6.5 Writing to FLASH Program Memory

The minimum programming block is 4 words or 8 bytes. Word or byte programming is not supported.

Table Writes are used internally to load the holding registers needed to program the FLASH memory. There are 8 holding registers used by the Table Writes for programming.

Since the Table Latch (TABLAT) is only a single byte, the TBLWT instruction has to be executed 8 times for each programming operation. All of the Table Write operations will essentially be short writes, because only the holding registers are written. At the end of updating 8 registers, the EECON1 register must be written to, to start the programming operation with a long write.

The long write is necessary for programming the internal FLASH. Instruction execution is halted while in a long write cycle. The long write will be terminated by the internal programming timer.

The EEPROM on-chip timer controls the write time. The write/erase voltages are generated by an on-chip charge pump rated to operate over the voltage range of the device for byte or word operations.

6.5.1 FLASH PROGRAM MEMORY WRITE SEQUENCE

The sequence of events for programming an internal program memory location should be:

1. Read 64 bytes into RAM.
2. Update data values in RAM as necessary.
3. Load Table Pointer with address being erased.
4. Do the row erase procedure.
5. Load Table Pointer with address of first byte being written.
6. Write the first 8 bytes into the holding registers using the TBLWT instruction, auto-increment may be used.
7. Set the EECON1 register for the write operation:
   - set the EEPGD bit to point to program memory;
   - clear the CFGS bit to access program memory;
   - set the WREN to enable byte writes.
8. Disable interrupts.
9. Write 55h to EECON2.
10. Write AAh to EECON2.
11. Set the $\overline{WR}$ bit. This will begin the write cycle.
12. The CPU will stall for duration of the write (about 2 ms using internal timer).
13. Re-enable interrupts.
14. Repeat steps 6-14 seven times, to write 64 bytes.
15. Verify the memory (Table Read).

This procedure will require about 18 ms to update one row of 64 bytes of memory. An example of the required code is given in Example 6-3.

Note:	Before setting the WR bit, the table pointer address needs to be within the intended address range of the 8 bytes in the holding registers.

FIGURE 6-5: TABLE WRITES TO FLASH PROGRAM MEMORY

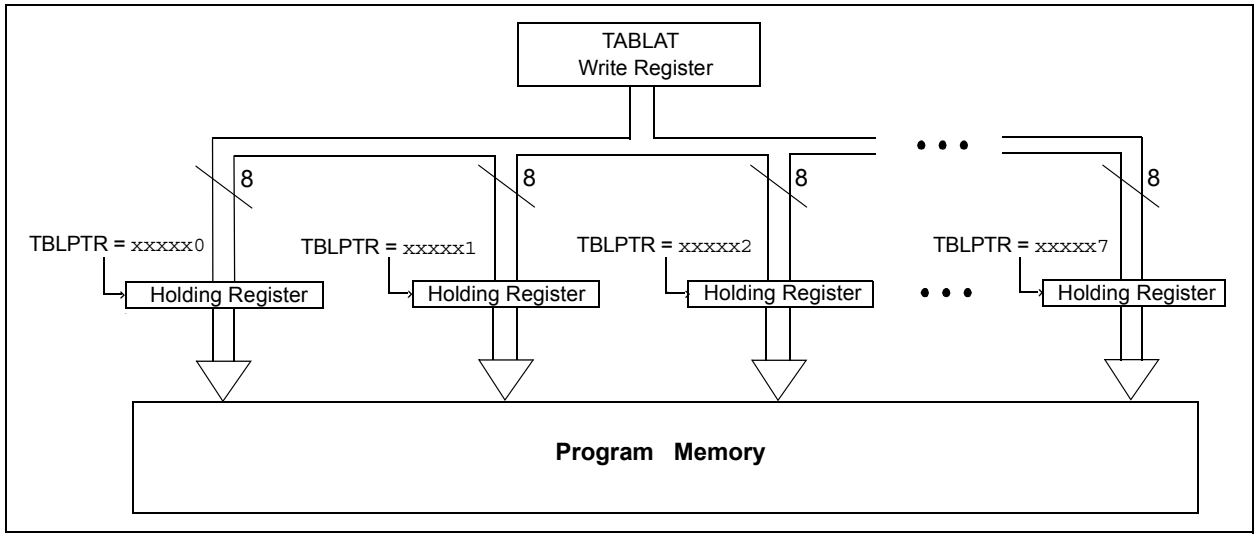

EXAMPLE 6-3: WRITING TO FLASH PROGRAM MEMORY

```
                MOVLW   D'64                    ; number of bytes in erase block
                MOVWF   COUNTER
                MOVLW   high (BUFFER_ADDR)      ; point to buffer
                MOVWF   FSR0H
                MOVLW   low (BUFFER_ADDR)
                MOVWF   FSR0L
                MOVLW   upper (CODE_ADDR)       ; Load TBLPTR with the base
                MOVWF   TBLPTRU                 ; address of the memory block
                MOVLW   high (CODE_ADDR)
                MOVWF   TBLPTRH
                MOVLW   low (CODE_ADDR)
                MOVWF   TBLPTRL
READ_BLOCK
                TBLRD*+                         ; read into TABLAT, and inc
                MOVF    TABLAT, W               ; get data
                MOVWF   POSTINC0                ; store data
                DECFSZ  COUNTER                 ; done?
                BRA     READ_BLOCK              ; repeat
MODIFY_WORD
                MOVLW   DATA_ADDR_HIGH          ; point to buffer
                MOVWF   FSR0H
                MOVLW   DATA_ADDR_LOW
                MOVWF   FSR0L
                MOVLW   NEW_DATA_LOW            ; update buffer word
                MOVWF   POSTINC0
                MOVLW   NEW_DATA_HIGH
                MOVWF   INDF0
ERASE_BLOCK
                MOVLW   upper (CODE_ADDR)       ; load TBLPTR with the base
                MOVWF   TBLPTRU                 ; address of the memory block
                MOVLW   high (CODE_ADDR)
                MOVWF   TBLPTRH
                MOVLW   low (CODE_ADDR)
                MOVWF   TBLPTRL
                BSF     EECON1,EEPGD            ; point to FLASH program memory
                BCF     EECON1,CFGS             ; access FLASH program memory
                BSF     EECON1,WREN             ; enable write to memory
                BSF     EECON1,FREE             ; enable Row Erase operation
                BCF     INTCON,GIE              ; disable interrupts
                MOVLW   55h
Required        MOVWF   EECON2                  ; write 55H
Sequence        MOVLW   0AAh
                MOVWF   EECON2                  ; write AAH
                BSF     EECON1,WR               ; start erase (CPU stall)
                NOP
                BSF     INTCON,GIE              ; re-enable interrupts
                TBLRD*-                         ; dummy read decrement
WRITE_BUFFER_BACK
                MOVLW   8                       ; number of write buffer groups of 8 bytes
                MOVWF   COUNTER_HI
                MOVLW   high (BUFFER_ADDR)      ; point to buffer
                MOVWF   FSR0H
                MOVLW   low (BUFFER_ADDR)
                MOVWF   FSR0L
PROGRAM_LOOP
                MOVLW   8                       ; number of bytes in holding register
                MOVWF   COUNTER
WRITE_WORD_TO_HREGS
                MOVFW   POSTINC0, W             ; get low byte of buffer data
                MOVWF   TABLAT                  ; present data to table latch
                TBLWT+*                         ; write data, perform a short write
                                                ; to internal TBLWT holding register.
                DECFSZ  COUNTER                 ; loop until buffers are full
                BRA     WRITE_WORD_TO_HREGS
```


© 2003 Microchip Technology Inc.

EXAMPLE 6-3: WRITING TO FLASH PROGRAM MEMORY (CONTINUED)

```
WRITE_WORD_TO_HREGS
               MOVFW   POSTINC0, W              ; get low byte of buffer data
               MOVWF   TABLAT                   ; present data to table latch
               TBLWT+*                          ; write data, perform a short write
                                                ; to internal TBLWT holding register.
               DECFSZ  COUNTER                  ; loop until buffers are full
               BRA     WRITE_WORD_TO_HREGS
PROGRAM_MEMORY
               BSF     EECON1,EEPGD             ; point to FLASH program memory
               BCF     EECON1,CFGS              ; access FLASH program memory
               BSF     EECON1,WREN              ; enable write to memory
               BCF     INTCON,GIE               ; disable interrupts
               MOVLW   55h                      ; write 55h
Required       MOVWF   EECON2
Sequence       MOVLW   0AAh                     ; write 0AAh
               MOVWF   EECON2                   ; start program (CPU stall)
               BSF     EECON1,WR
               NOP
               BSF     INTCON,GIE               ; re-enable interrupts
               DECFSZ  COUNTER_HI               ; loop until done
               BRA     PROGRAM_LOOP
               BCF     EECON1,WREN              ; disable write to memory
```

6.5.2 WRITE VERIFY

Depending on the application, good programming practice may dictate that the value written to the memory should be verified against the original value. This should be used in applications where excessive writes can stress bits near the specification limit.

6.5.3 UNEXPECTED TERMINATION OF WRITE OPERATION

If a write is terminated by an unplanned event, such as loss of power or an unexpected RESET, the memory location just programmed should be verified and reprogrammed if needed.The WRERR bit is set when a write operation is interrupted by a $\overline{\text{MCLR}}$ Reset, or a WDT Time-out Reset during normal operation. In these situations, users can check the WRERR bit and rewrite the location.

6.5.4 PROTECTION AGAINST SPURIOUS WRITES

To reduce the probability against spurious writes to FLASH program memory, the write initiate sequence must also be followed. See Section 24.0, Special Features of the CPU for more detail.

6.6 FLASH Program Operation During Code Protection

See Section 24.0, Special Features of the CPU for details on code protection of FLASH program memory.

TABLE 6-2: REGISTERS ASSOCIATED WITH PROGRAM FLASH MEMORY

Name	Bit 7	Bit 6	Bit 5	Bit 4	Bit 3	Bit 2	Bit 1	Bit 0	Value on: POR, BOR	Value on all other RESETS
TBLPTRU	—	—	bit21	Program Memory Table Pointer Upper Byte (TBLPTR<20:16>)					--00 0000	--00 0000
TBPLTRH	Program Memory Table Pointer High Byte (TBLPTR<15:8>)								0000 0000	0000 0000
TBLPTRL	Program Memory Table Pointer High Byte (TBLPTR<7:0>)								0000 0000	0000 0000
TABLAT	Program Memory Table Latch								0000 0000	0000 0000
INTCON	GIE/GIEH	PEIE/GIEL	TMR0IE	INTE	RBIE	TMR0IF	INTF	RBIF	0000 000x	0000 000u
EECON2	EEPROM Control Register2 (not a physical register)								—	—
EECON1	EEPGD	CFGS	—	FREE	WRERR	WREN	$\overline{WR}$	$\overline{RD}$	xx-0 x000	uu-0 u000
IPR2	—	CMIP	—	EEIP	BCLIP	LVDIP	TMR3IP	CCP2IP	-1-1 1111	-1-1 1111
PIR2	—	CMIF	—	EEIF	BCLIF	LVDIF	TMR3IF	CCP2IF	-0-0 0000	-0-0 0000
PIE2	—	CMIE	—	EEIE	BCLIE	LVDIE	TMR3IE	CCP2IE	-0-0 0000	-0-0 0000

Legend: x = unknown, u = unchanged, r = reserved, - = unimplemented read as '0'.
Shaded cells are not used during FLASH/EEPROM access.

© 2003 Microchip Technology Inc.

7.0 8 X 8 HARDWARE MULTIPLIER

7.1 Introduction

An 8 x 8 hardware multiplier is included in the ALU of the PIC18FXX8 devices. By making the multiply a hardware operation, it completes in a single instruction cycle. This is an unsigned multiply that gives a 16-bit result. The result is stored into the 16-bit product register pair (PRODH:PRODL). The multiplier does not affect any flags in the ALUSTA register.

Making the 8 x 8 multiplier execute in a single cycle gives the following advantages:

- Higher computational throughput
- Reduces code size requirements for multiply algorithms

The performance increase allows the device to be used in applications previously reserved for Digital Signal Processors.

Table 7-1 shows a performance comparison between enhanced devices using the single cycle hardware multiply, and performing the same function without the hardware multiply.

7.2 Operation

Example 7-1 shows the sequence to do an 8 x 8 unsigned multiply. Only one instruction is required when one argument of the multiply is already loaded in the WREG register.

Example 7-2 shows the sequence to do an 8 x 8 signed multiply. To account for the sign bits of the arguments, each argument's Most Significant bit (MSb) is tested and the appropriate subtractions are done.

EXAMPLE 7-1: 8 x 8 UNSIGNED MULTIPLY ROUTINE

```
MOVF    ARG1, W     ;
MULWF   ARG2        ; ARG1 * ARG2 ->
                    ;   PRODH:PRODL
```

EXAMPLE 7-2: 8 x 8 SIGNED MULTIPLY ROUTINE

```
MOVF    ARG1,  W
MULWF   ARG2        ; ARG1 * ARG2 ->
                    ; PRODH:PRODL
BTFSC   ARG2,  SB   ; Test Sign Bit
SUBWF   PRODH       ; PRODH = PRODH
                    ;         - ARG1
MOVF    ARG2,  W
BTFSC   ARG1,  SB   ; Test Sign Bit
SUBWF   PRODH       ; PRODH = PRODH
                    ;         - ARG2
```

TABLE 7-1: PERFORMANCE COMPARISON

Routine	Multiply Method	Program Memory (Words)	Cycles (Max)	Time		
				@ 40 MHz	@ 10 MHz	@ 4 MHz
8 x 8 unsigned	Without hardware multiply	13	69	6.9 μs	27.6 μs	69 μs
	Hardware multiply	1	1	100 ns	400 ns	1 μs
8 x 8 signed	Without hardware multiply	33	91	9.1 μs	36.4 μs	91 μs
	Hardware multiply	6	6	600 ns	2.4 μs	6 μs
16 x 16 unsigned	Without hardware multiply	21	242	24.2 μs	96.8 μs	242 μs
	Hardware multiply	24	24	2.4 μs	9.6 μs	24 μs
16 x 16 signed	Without hardware multiply	52	254	25.4 μs	102.6 μs	254 μs
	Hardware multiply	36	36	3.6 μs	14.4 μs	36 μs

© 2003 Microchip Technology Inc.

Example 7-3 shows the sequence to do a 16 x 16 unsigned multiply. Equation 7-1 shows the algorithm that is used. The 32-bit result is stored in four registers, RES3:RES0.

EQUATION 7-1: 16 x 16 UNSIGNED MULTIPLICATION ALGORITHM

$$
\begin{aligned}
RES3:RES0 &= ARG1H:ARG1L \bullet ARG2H:ARG2L \\
&= (ARG1H \bullet ARG2H \bullet 2^{16}) + \\
&\quad (ARG1H \bullet ARG2L \bullet 2^{8}) + \\
&\quad (ARG1L \bullet ARG2H \bullet 2^{8}) + \\
&\quad (ARG1L \bullet ARG2L)
\end{aligned}
$$

EXAMPLE 7-3: 16 x 16 UNSIGNED MULTIPLY ROUTINE

```
    MOVF    ARG1L, W
    MULWF   ARG2L         ; ARG1L * ARG2L ->
                          ; PRODH:PRODL
    MOVFF   PRODH, RES1   ;
    MOVFF   PRODL, RES0   ;
;
    MOVF    ARG1H, W
    MULWF   ARG2H         ; ARG1H * ARG2H ->
                          ; PRODH:PRODL
    MOVFF   PRODH, RES3   ;
    MOVFF   PRODL, RES2   ;
;
    MOVF    ARG1L, W
    MULWF   ARG2H         ; ARG1L * ARG2H ->
                          ; PRODH:PRODL
    MOVF    PRODL, W      ;
    ADDWF   RES1          ; Add cross
    MOVF    PRODH, W      ; products
    ADDWFC  RES2          ;
    CLRF    WREG          ;
    ADDWFC  RES3          ;
;
    MOVF    ARG1H, W      ;
    MULWF   ARG2L         ; ARG1H * ARG2L ->
                          ; PRODH:PRODL
    MOVF    PRODL, W      ;
    ADDWF   RES1          ; Add cross
    MOVF    PRODH, W      ; products
    ADDWFC  RES2          ;
    CLRF    WREG          ;
    ADDWFC  RES3          ;
```

Example 7-4 shows the sequence to do a 16 x 16 signed multiply. Equation 7-2 shows the algorithm used. The 32-bit result is stored in four registers, RES3:RES0. To account for the sign bits of the arguments, each argument pairs Most Significant bit (MSb) is tested and the appropriate subtractions are done.

EQUATION 7-2: 16 x 16 SIGNED MULTIPLICATION ALGORITHM

$$
\begin{aligned}
RES3:RES0 &= ARG1H:ARG1L \bullet ARG2H:ARG2L \\
&= (ARG1H \bullet ARG2H \bullet 2^{16}) + \\
&\quad (ARG1H \bullet ARG2L \bullet 2^{8}) + \\
&\quad (ARG1L \bullet ARG2H \bullet 2^{8}) + \\
&\quad (ARG1L \bullet ARG2L) + \\
&\quad (-1 \bullet ARG2H\langle 7\rangle \bullet ARG1H:ARG1L \bullet 2^{16}) + \\
&\quad (-1 \bullet ARG1H\langle 7\rangle \bullet ARG2H:ARG2L \bullet 2^{16})
\end{aligned}
$$

EXAMPLE 7-4: 16 x 16 SIGNED MULTIPLY ROUTINE

```
    MOVF    ARG1L, W
    MULWF   ARG2L         ; ARG1L * ARG2L ->
                          ; PRODH:PRODL
    MOVFF   PRODH, RES1   ;
    MOVFF   PRODL, RES0   ;
;
    MOVF    ARG1H, W
    MULWF   ARG2H         ; ARG1H * ARG2H ->
                          ; PRODH:PRODL
    MOVFF   PRODH, RES3   ;
    MOVFF   PRODL, RES2   ;
;
    MOVF    ARG1L, W
    MULWF   ARG2H         ; ARG1L * ARG2H ->
                          ; PRODH:PRODL
    MOVF    PRODL, W      ;
    ADDWF   RES1          ; Add cross
    MOVF    PRODH, W      ; products
    ADDWFC  RES2          ;
    CLRF    WREG          ;
    ADDWFC  RES3          ;
;
    MOVF    ARG1H, W      ;
    MULWF   ARG2L         ; ARG1H * ARG2L ->
                          ; PRODH:PRODL
    MOVF    PRODL, W      ;
    ADDWF   RES1          ; Add cross
    MOVF    PRODH, W      ; products
    ADDWFC  RES2          ;
    CLRF    WREG          ;
    ADDWFC  RES3          ;
;
    BTFSS   ARG2H, 7      ; ARG2H:ARG2L neg?
    BRA     SIGN_ARG1     ; no, check ARG1
    MOVF    ARG1L, W      ;
    SUBWF   RES2          ;
    MOVF    ARG1H, W      ;
    SUBWFB  RES3
;
SIGN_ARG1
    BTFSS   ARG1H, 7      ; ARG1H:ARG1L neg?
    BRA     CONT_CODE     ; no, done
    MOVF    ARG2L, W      ;
    SUBWF   RES2          ;
    MOVF    ARG2H, W      ;
    SUBWFB  RES3
;
CONT_CODE
      :
```


© 2003 Microchip Technology Inc.

8.0 INTERRUPTS

The PIC18FXX8 devices have multiple interrupt sources and an interrupt priority feature that allows each interrupt source to be assigned a high priority level or a low priority level. The high priority interrupt vector is at 000008h, and the low priority interrupt vector is at 000018h. High priority interrupt events will override any low priority interrupts that may be in progress.

There are 13 registers that are used to control interrupt operation. These registers are:

- RCON
- INTCON
- INTCON2
- INTCON3
- PIR1, PIR2, PIR3
- PIE1, PIE2, PIE3
- IPR1, IPR2, IPR3

It is recommended that the Microchip header files, supplied with MPLAB® IDE, be used for the symbolic bit names in these registers. This allows the assembler/compiler to automatically take care of the placement of these bits within the specified register.

Each interrupt source has three bits to control its operation. The functions of these bits are:

- Flag bit to indicate that an interrupt event occurred
- Enable bit that allows program execution to branch to the interrupt vector address when the flag bit is set
- Priority bit to select high priority or low priority

The interrupt priority feature is enabled by setting the IPEN bit (RCON register). When interrupt priority is enabled, there are two bits that enable interrupts globally. Setting the GIEH bit (INTCON<7>) enables all interrupts. Setting the GIEL bit (INTCON register) enables all interrupts that have the priority bit cleared. When the interrupt flag, enable bit and appropriate global interrupt enable bit are set, the interrupt will vector immediately to address 000008h or 000018h, depending on the priority level. Individual interrupts can be disabled through their corresponding enable bits.

When the IPEN bit is cleared (default state), the interrupt priority feature is disabled and interrupts are compatible with PICmicro® mid-range devices. In Compatibility mode, the interrupt priority bits for each source have no effect. The PEIE bit (INTCON register) enables/disables all peripheral interrupt sources. The GIE bit (INTCON register) enables/disables all interrupt sources. All interrupts branch to address 000008h in Compatibility mode.

When an interrupt is responded to, the Global Interrupt Enable bit is cleared to disable further interrupts. If the IPEN bit is cleared, this is the GIE bit. If interrupt priority levels are used, this will be either the GIEH or GIEL bit. High priority interrupt sources can interrupt a low priority interrupt.

The return address is pushed onto the stack and the PC is loaded with the interrupt vector address (000008h or 000018h). Once in the Interrupt Service Routine, the source(s) of the interrupt can be determined by polling the interrupt flag bits. The interrupt flag bits must be cleared in software before re-enabling interrupts, to avoid recursive interrupts.

The "return from interrupt" instruction, `RETFIE`, exits the interrupt routine and sets the GIE bit (GIEH or GIEL if priority levels are used), which re-enables interrupts.

For external interrupt events, such as the INT pins or the PORTB input change interrupt, the interrupt latency will be three to four instruction cycles. The exact latency is the same for one or two-cycle instructions. Individual interrupt flag bits are set, regardless of the status of their corresponding enable bit, or the GIE bit.

Note:	Do not use the `MOVFF` instruction to modify any of the interrupt control registers while **any** interrupt is enabled. Doing so may cause erratic microcontroller behavior.

FIGURE 8-1: INTERRUPT LOGIC

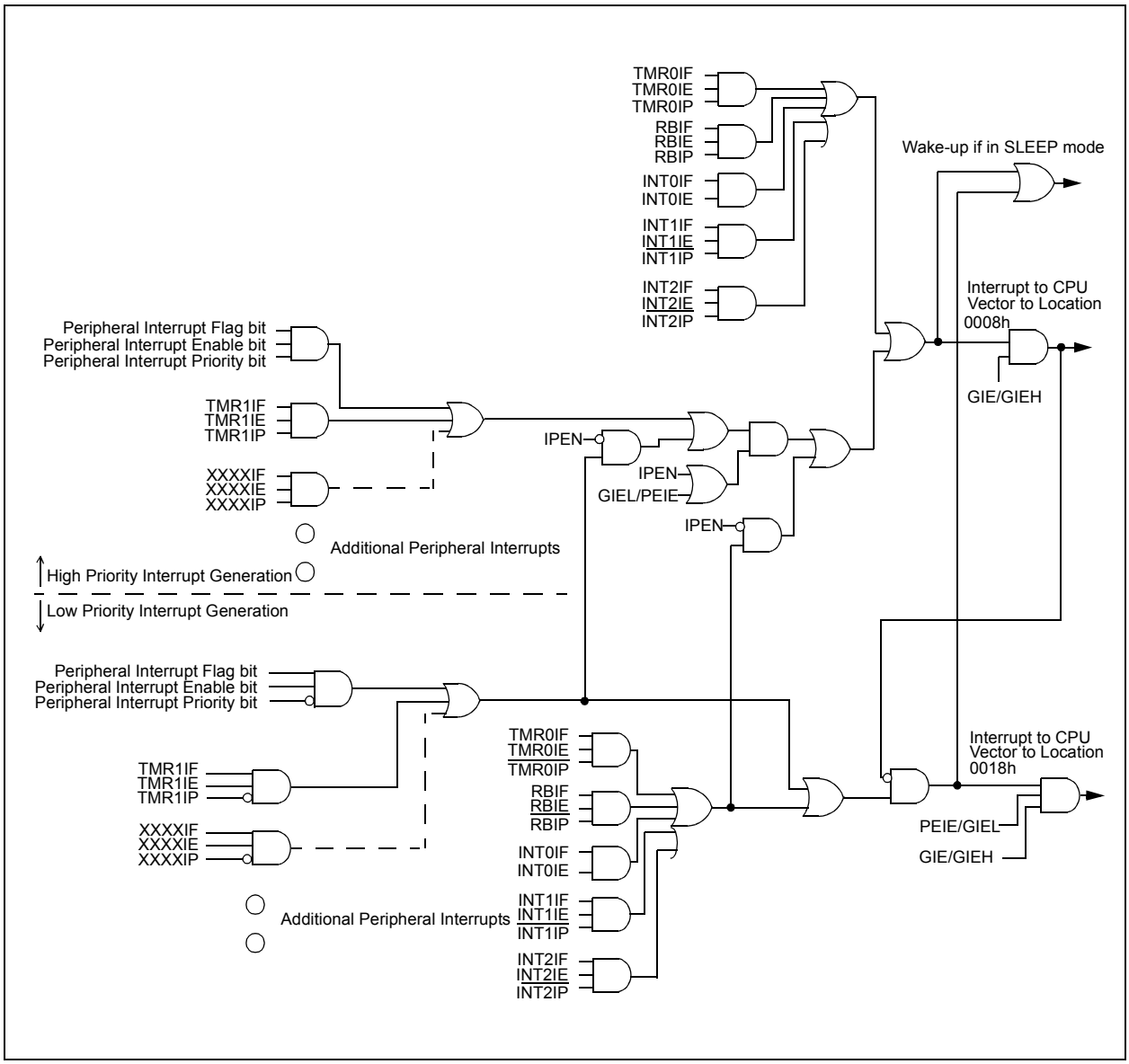

© 2003 Microchip Technology Inc.

8.1 INTCON Registers

The INTCON registers are readable and writable registers, which contain various enable, priority, and flag bits. Because of the number of interrupts to be controlled, PIC18FXX8 devices have three INTCON registers. They are detailed in Register 8-1 through Register 8-3.

Note:	Interrupt flag bits are set when an interrupt condition occurs, regardless of the state of its corresponding enable bit, or the global enable bit. User software should ensure the appropriate interrupt flag bits are clear prior to enabling an interrupt. This feature allows software polling.

REGISTER 8-1: INTCON REGISTER

R/W-0	R/W-0	R/W-0	R/W-0	R/W-0	R/W-0	R/W-0	R/W-x
GIE/GIEH	PEIE/GIEL	TMR0IE	INT0IE	RBIE	TMR0IF	INT0IF	RBIF
bit 7							bit 0

bit 7 **GIE/GIEH:** Global Interrupt Enable bit

When IPEN (RCON<7>) = 0:
1 = Enables all unmasked interrupts
0 = Disables all interrupts

When IPEN (RCON<7>) = 1:
1 = Enables all high priority interrupts
0 = Disables all priority interrupts

bit 6 **PEIE/GIEL:** Peripheral Interrupt Enable bit

When IPEN (RCON<7>) = 0:
1 = Enables all unmasked peripheral interrupts
0 = Disables all peripheral interrupts

When IPEN (RCON<7>) = 1:
1 = Enables all low priority peripheral interrupts
0 = Disables all low priority peripheral interrupts

bit 5 **TMR0IE:** TMR0 Overflow Interrupt Enable bit
1 = Enables the TMR0 overflow interrupt
0 = Disables the TMR0 overflow interrupt

bit 4 **INT0IE:** INT0 External Interrupt Enable bit
1 = Enables the INT0 external interrupt
0 = Disables the INT0 external interrupt

bit 3 **RBIE:** RB Port Change Interrupt Enable bit
1 = Enables the RB port change interrupt
0 = Disables the RB port change interrupt

bit 2 **TMR0IF:** TMR0 Overflow Interrupt Flag bit
1 = TMR0 register has overflowed (must be cleared in software)
0 = TMR0 register did not overflow

bit 1 **INT0IF:** INT0 External Interrupt Flag bit
1 = The INT0 external interrupt occurred (must be cleared in software by reading PORTB)
0 = The INT0 external interrupt did not occur

bit 0 **RBIF:** RB Port Change Interrupt Flag bit
1 = At least one of the RB7:RB4 pins changed state (must be cleared in software)
0 = None of the RB7:RB4 pins have changed state

Note: A mismatch condition will continue to set this bit. Reading PORTB will end the mismatch condition and allow the bit to be cleared.

Legend:			
R = Readable bit	W = Writable bit	U = Unimplemented bit, read as '0'	
- n = Value at POR	'1' = Bit is set	'0' = Bit is cleared	x = Bit is unknown

REGISTER 8-2: INTCON2 REGISTER

R/W-1	R/W-1	R/W-1	U-0	U-0	R/W-1	U-0	R/W-1
$\overline{\text{RBPU}}$	INTEDG0	INTEDG1	—	—	TMR0IP	—	RBIP
bit 7							bit 0

bit 7 **$\overline{\text{RBPU}}$**: PORTB Pull-up Enable bit
1 = All PORTB pull-ups are disabled
0 = PORTB pull-ups are enabled by individual port latch values

bit 6 **INTEDG0**: External Interrupt 0 Edge Select bit
1 = Interrupt on rising edge
0 = Interrupt on falling edge

bit 5 **INTEDG1**: External Interrupt 1 Edge Select bit
1 = Interrupt on rising edge
0 = Interrupt on falling edge

bit 4-3 **Unimplemented:** Read as '0'

bit 2 **TMR0IP**: TMR0 Overflow Interrupt Priority bit
1 = High priority
0 = Low priority

bit 1 **Unimplemented:** Read as '0'

bit 0 **RBIP**: RB Port Change Interrupt Priority bit
1 = High priority
0 = Low priority

Legend:			
R = Readable bit	W = Writable bit	U = Unimplemented bit, read as '0'	
- n = Value at POR	'1' = Bit is set	'0' = Bit is cleared	x = Bit is unknown

Note: Interrupt flag bits are set when an interrupt condition occurs, regardless of the state of its corresponding enable bit, or the global enable bit. User software should ensure the appropriate interrupt flag bits are clear prior to enabling an interrupt. This feature allows software polling.

© 2003 Microchip Technology Inc.

REGISTER 8-3: INTCON3 REGISTER

R/W-1	R/W-1	U-0	R/W-0	R/W-0	U-0	R/W-0	R/W-0
INT2IP	INT1IP	—	INT2IE	INT1IE	—	INT2IF	INT1IF
bit 7							bit 0

bit 7 **INT2IP:** INT2 External Interrupt Priority bit
1 = High priority
0 = Low priority

bit 6 **INT1IP:** INT1 External Interrupt Priority bit
1 = High priority
0 = Low priority

bit 5 **Unimplemented:** Read as '0'

bit 4 **INT2IE:** INT2 External Interrupt Enable bit
1 = Enables the INT2 external interrupt
0 = Disables the INT2 external interrupt

bit 3 **INT1IE:** INT1 External Interrupt Enable bit
1 = Enables the INT1 external interrupt
0 = Disables the INT1 external interrupt

bit 2 **Unimplemented:** Read as '0'

bit 1 **INT2IF:** INT2 External Interrupt Flag bit
1 = The INT2 external interrupt occurred (must be cleared in software)
0 = The INT2 external interrupt did not occur

bit 0 **INT1IF:** INT1 External Interrupt Flag bit
1 = The INT1 external interrupt occurred (must be cleared in software)
0 = The INT1 external interrupt did not occur

Legend:			
R = Readable bit	W = Writable bit	U = Unimplemented bit, read as '0'	
- n = Value at POR	'1' = Bit is set	'0' = Bit is cleared	x = Bit is unknown

Note: Interrupt flag bits are set when an interrupt condition occurs, regardless of the state of its corresponding enable bit, or the global enable bit. User software should ensure the appropriate interrupt flag bits are clear prior to enabling an interrupt. This feature allows software polling.

8.2 PIR Registers

The Peripheral Interrupt Request (PIR) registers contain the individual flag bits for the peripheral interrupts (Register 8-4 through Register 8-6). Due to the number of peripheral interrupt sources, there are three Peripheral Interrupt Request (Flag) registers (PIR1, PIR2, PIR3).

Note 1: Interrupt flag bits are set when an interrupt condition occurs, regardless of the state of its corresponding enable bit, or the global enable bit, GIE (INTCON register).

2: User software should ensure the appropriate interrupt flag bits are cleared prior to enabling an interrupt, and after servicing that interrupt.

REGISTER 8-4: PIR1: PERIPHERAL INTERRUPT REQUEST (FLAG) REGISTER 1

R/W-0	R/W-0	R-0	R-0	R/W-0	R/W-0	R/W-0	R/W-0
PSPIF(1)	ADIF	RCIF	TXIF	SSPIF	CCP1IF	TMR2IF	TMR1IF
bit 7							bit 0

bit 7 **PSPIF:** Parallel Slave Port Read/Write Interrupt Flag bit(1)
1 = A read or a write operation has taken place (must be cleared in software)
0 = No read or write has occurred

bit 6 **ADIF**: A/D Converter Interrupt Flag bit
1 = An A/D conversion completed (must be cleared in software)
0 = The A/D conversion is not complete

bit 5 **RCIF**: USART Receive Interrupt Flag bit
1 =The USART receive buffer, RCREG, is full (cleared when RCREG is read)
0 =The USART receive buffer is empty

bit 4 **TXIF**: USART Transmit Interrupt Flag bit
1 = The USART transmit buffer, TXREG, is empty (cleared when TXREG is written)
0 = The USART transmit buffer is full

bit 3 **SSPIF**: Master Synchronous Serial Port Interrupt Flag bit
1 = The transmission/reception is complete (must be cleared in software)
0 = Waiting to transmit/receive

bit 2 **CCP1IF**: CCP1 Interrupt Flag bit

Capture mode:
1 = A TMR1 register capture occurred (must be cleared in software)
0 = No TMR1 register capture occurred

Compare mode:
1 = A TMR1 register compare match occurred (must be cleared in software)
0 = No TMR1 register compare match occurred

PWM mode:
Unused in this mode

bit 1 **TMR2IF:** TMR2 to PR2 Match Interrupt Flag bit
1 = TMR2 to PR2 match occurred (must be cleared in software)
0 = No TMR2 to PR2 match occurred

bit 0 **TMR1IF:** TMR1 Overflow Interrupt Flag bit
1 = TMR1 register overflowed (must be cleared in software)
0 = TMR1 register did not overflow

Note 1: This bit is only available on PIC18F4X8 devices. For PIC18F2X8 devices, this bit is unimplemented and reads as '0'.

Legend:			
R = Readable bit	W = Writable bit	U = Unimplemented bit, read as '0'	
- n = Value at POR	'1' = Bit is set	'0' = Bit is cleared	x = Bit is unknown

© 2003 Microchip Technology Inc.

REGISTER 8-5: PIR2: PERIPHERAL INTERRUPT REQUEST (FLAG) REGISTER 2

U-0	R/W-0	U-0	R/W-0	R/W-0	R/W-0	R/W-0	R/W-0
—	CMIF(1)	—	EEIF	BCLIF	LVDIF	TMR3IF	ECCP1IF(1)
bit 7							bit 0

bit 7 **Unimplemented:** Read as '0'

bit 6 **CMIF:** Comparator Interrupt Flag bit(1)
1 = Comparator input has changed
0 = Comparator input has not changed

bit 5 **Unimplemented:** Read as '0'

bit 4 **EEIF:** EEPROM Write Operation Interrupt Flag bit
1 = Write operation is complete (must be cleared in software)
0 = Write operation is not complete

bit 3 **BCLIF:** Bus Collision Interrupt Flag bit
1 = A bus collision occurred (must be cleared in software)
0 = No bus collision occurred

bit 2 **LVDIF:** Low Voltage Detect Interrupt Flag bit
1 = A low voltage condition occurred (must be cleared in software)
0 = The device voltage is above the Low Voltage Detect trip point

bit 1 **TMR3IF:** TMR3 Overflow Interrupt Flag bit
1 = TMR3 register overflowed (must be cleared in software)
0 = TMR3 register did not overflow

bit 0 **ECCP1IF:** ECCP1 Interrupt Flag bit(1)

Capture mode:
1 = A TMR1 (TMR3) register capture occurred
(must be cleared in software)
0 = No TMR1 (TMR3) register capture occurred

Compare mode:
1 = A TMR1 register compare match occurred
(must be cleared in software)
0 = No TMR1 register compare match occurred

PWM mode:
Unused in this mode

Note 1: This bit is only available on PIC18F4X8 devices. For PIC18F2X8 devices, this bit is unimplemented and reads as '0'.

Legend:			
R = Readable bit	W = Writable bit	U = Unimplemented bit, read as '0'	
- n = Value at POR	'1' = Bit is set	'0' = Bit is cleared	x = Bit is unknown

REGISTER 8-6: PIR3: PERIPHERAL INTERRUPT REQUEST (FLAG) REGISTER 3

R/W-0	R/W-0	R/W-0	R/W-0	R/W-0	R/W-0	R/W-0	R/W-0
IRXIF	WAKIF	ERRIF	TXB2IF	TXB1IF	TXB0IF	RXB1IF	RXB0IF
bit 7							bit 0

bit 7 **IRXIF:** Invalid Message Received Interrupt Flag bit
1 = An invalid message has occurred on the CAN bus
0 = An invalid message has not occurred on the CAN bus

bit 6 **WAKIF:** Bus Activity Wake-up Interrupt Flag bit
1 = Activity on the CAN bus has occurred
0 = Activity on the CAN bus has not occurred

bit 5 **ERRIF:** CAN bus Error Interrupt Flag bit
1 = An error has occurred in the CAN module (multiple sources)
0 = An error has not occurred in the CAN module

bit 4 **TXB2IF:** Transmit Buffer 2 Interrupt Flag bit
1 = Transmit Buffer 2 has completed transmission of a message, and may be reloaded
0 = Transmit Buffer 2 has not completed transmission of a message

bit 3 **TXB1IF:** Transmit Buffer 1 Interrupt Flag bit
1 = Transmit Buffer 1 has completed transmission of a message, and may be reloaded
0 = Transmit Buffer 1 has not completed transmission of a message

bit 2 **TXB0IF:** Transmit Buffer 0 Interrupt Flag bit
1 = Transmit Buffer 0 has completed transmission of a message, and may be reloaded
0 = Transmit Buffer 0 has not completed transmission of a message

bit 1 **RXB1IF:** Receive Buffer 1 Interrupt Flag bit
1 = Receive Buffer 1 has received a new message
0 = Receive Buffer 1 has not received a new message

bit 0 **RXB0IF:** Receive Buffer 0 Interrupt Flag bit
1 = Receive Buffer 0 has received a new message
0 = Receive Buffer 0 has not received a new message

Legend:			
R = Readable bit	W = Writable bit	U = Unimplemented bit, read as '0'	
- n = Value at POR	'1' = Bit is set	'0' = Bit is cleared	x = Bit is unknown

© 2003 Microchip Technology Inc.

8.3 PIE Registers

The Peripheral Interrupt Enable (PIE) registers contain the individual enable bits for the peripheral interrupts (Register 8-7 through Register 8-9). Due to the number of peripheral interrupt sources, there are three Peripheral Interrupt Enable registers (PIE1, PIE2, PIE3). When IPEN is clear, the PEIE bit must be set to enable any of these peripheral interrupts.

REGISTER 8-7: PIE1: PERIPHERAL INTERRUPT ENABLE REGISTER 1

R/W-0	R/W-0	R/W-0	R/W-0	R/W-0	R/W-0	R/W-0	R/W-0
PSPIE(1)	ADIE	RCIE	TXIE	SSPIE	CCP1IE	TMR2IE	TMR1IE
bit 7							bit 0

bit 7 **PSPIE:** Parallel Slave Port Read/Write Interrupt Enable bit(1)
1 = Enables the PSP read/write interrupt
0 = Disables the PSP read/write interrupt

bit 6 **ADIE**: A/D Converter Interrupt Enable bit
1 = Enables the A/D interrupt
0 = Disables the A/D interrupt

bit 5 **RCIE**: USART Receive Interrupt Enable bit
1 = Enables the USART receive interrupt
0 = Disables the USART receive interrupt

bit 4 **TXIE**: USART Transmit Interrupt Enable bit
1 = Enables the USART transmit interrupt
0 = Disables the USART transmit interrupt

bit 3 **SSPIE**: Master Synchronous Serial Port Interrupt Enable bit
1 = Enables the MSSP interrupt
0 = Disables the MSSP interrupt

bit 2 **CCP1IE**: CCP1 Interrupt Enable bit
1 = Enables the CCP1 interrupt
0 = Disables the CCP1 interrupt

bit 1 **TMR2IE**: TMR2 to PR2 Match Interrupt Enable bit
1 = Enables the TMR2 to PR2 match interrupt
0 = Disables the TMR2 to PR2 match interrupt

bit 0 **TMR1IE**: TMR1 Overflow Interrupt Enable bit
1 = Enables the TMR1 overflow interrupt
0 = Disables the TMR1 overflow interrupt

Note 1: This bit is only available on PIC18F4X8 devices. For PIC18F2X8 devices, this bit is unimplemented and reads as '0'.

Legend:			
R = Readable bit	W = Writable bit	U = Unimplemented bit, read as '0'	
- n = Value at POR	'1' = Bit is set	'0' = Bit is cleared	x = Bit is unknown

REGISTER 8-8: PIE2: PERIPHERAL INTERRUPT ENABLE REGISTER 2

U-0	R/W-0	U-0	R/W-0	R/W-0	R/W-0	R/W-0	R/W-0
—	CMIE(1)	—	EEIE	BCLIE	LVDIE	TMR3IE	ECCP1IE(1)
bit 7							bit 0

bit 7 **Unimplemented:** Read as '0'

bit 6 **CMIE:** Comparator Interrupt Enable bit(1)
1 = Enables the comparator interrupt
0 = Disables the comparator interrupt

bit 5 **Unimplemented:** Read as '0'

bit 4 **EEIE**: EEPROM Write Interrupt Enable bit
1 = Enabled
0 = Disabled

bit 3 **BCLIE**: Bus Collision Interrupt Enable bit
1 = Enabled
0 = Disabled

bit 2 **LVDIE**: Low Voltage Detect Interrupt Enable bit
1 = Enabled
0 = Disabled

bit 1 **TMR3IE**: TMR3 Overflow Interrupt Enable bit
1 = Enables the TMR3 overflow interrupt
0 = Disables the TMR3 overflow interrupt

bit 0 **ECCP1IE**: ECCP1 Interrupt Enable bit(1)
1 = Enables the ECCP1 interrupt
0 = Disables the ECCP1 interrupt

Note 1: This bit is only available on PIC18F4X8 devices. For PIC18F2X8 devices, this bit is unimplemented and reads as '0'.

Legend:			
R = Readable bit	W = Writable bit	U = Unimplemented bit, read as '0'	
- n = Value at POR	'1' = Bit is set	'0' = Bit is cleared	x = Bit is unknown

© 2003 Microchip Technology Inc.

REGISTER 8-9: PIE3: PERIPHERAL INTERRUPT ENABLE REGISTER 3

R/W-1	R/W-1	R/W-1	R/W-1	R/W-1	R/W-1	R/W-1	R/W-1
IRXIE	WAKIE	ERRIE	TXB2IE	TXB1IE	TXB0IE	RXB1IE	RXB0IE
bit 7							bit 0

bit 7 **IRXIE:** Invalid CAN Message Received Interrupt Enable bit
1 = Enables the invalid CAN message received interrupt
0 = Disables the invalid CAN message received interrupt

bit 6 **WAKIE:** Bus Activity Wake-up Interrupt Enable bit
1 = Enables the bus activity wake-up interrupt
0 = Disables the bus activity wake-up interrupt

bit 5 **ERRIE:** CAN bus Error Interrupt Enable bit
1 = Enables the CAN bus error interrupt
0 = Disables the CAN bus error interrupt

bit 4 **TXB2IE:** Transmit Buffer 2 Interrupt Enable bit
1 = Enables the Transmit Buffer 2 interrupt
0 = Disables the Transmit Buffer 2 interrupt

bit 3 **TXB1IE:** Transmit Buffer 1 Interrupt Enable bit
1 = Enables the Transmit Buffer 1 interrupt
0 = Disables the Transmit Buffer 1 interrupt

bit 2 **TXB0IE:** Transmit Buffer 0 Interrupt Enable bit
1 = Enables the Transmit Buffer 0 interrupt
0 = Disables the Transmit Buffer 0 interrupt

bit 1 **RXB1IE:** Receive Buffer 1 Interrupt Enable bit
1 = Enables the Receive Buffer 1 interrupt
0 = Disables the Receive Buffer 1 interrupt

bit 0 **RXB0IE:** Receive Buffer 0 Interrupt Enable bit
1 = Enables the Receive Buffer 0 interrupt
0 = Disables the Receive Buffer 0 interrupt

Legend:			
R = Readable bit	W = Writable bit	U = Unimplemented bit, read as ‘0’	
- n = Value at POR	‘1’ = Bit is set	‘0’ = Bit is cleared	x = Bit is unknown

8.4 IPR Registers

The Interrupt Priority (IPR) registers contain the individual priority bits for the peripheral interrupts. Due to the number of peripheral interrupt sources, there are three Peripheral Interrupt Priority registers (IPR1, IPR2 and IPR3). The operation of the priority bits requires that the Interrupt Priority Enable bit (IPEN) be set.

REGISTER 8-10: IPR1: PERIPHERAL INTERRUPT PRIORITY REGISTER 1

R/W-1	R/W-1	R/W-1	R/W-1	R/W-1	R/W-1	R/W-1	R/W-1
PSPIP(1)	ADIP	RCIP	TXIP	SSPIP	CCP1IP	TMR2IP	TMR1IP
bit 7							bit 0

bit 7 **PSPIP:** Parallel Slave Port Read/Write Interrupt Priority bit(1)
1 = High priority
0 = Low priority

bit 6 **ADIP**: A/D Converter Interrupt Priority bit
1 = High priority
0 = Low priority

bit 5 **RCIP**: USART Receive Interrupt Priority bit
1 = High priority
0 = Low priority

bit 4 **TXIP**: USART Transmit Interrupt Priority bit
1 = High priority
0 = Low priority

bit 3 **SSPIP**: Master Synchronous Serial Port Interrupt Priority bit
1 = High priority
0 = Low priority

bit 2 **CCP1IP**: CCP1 Interrupt Priority bit
1 = High priority
0 = Low priority

bit 1 **TMR2IP**: TMR2 to PR2 Match Interrupt Priority bit
1 = High priority
0 = Low priority

bit 0 **TMR1IP**: TMR1 Overflow Interrupt Priority bit
1 = High priority
0 = Low priority

Note 1: This bit is only available on PIC18F4X8 devices. For PIC18F2X8 devices, this bit is unimplemented and reads as '0'.

Legend:			
R = Readable bit	W = Writable bit	U = Unimplemented bit, read as '0'	
- n = Value at POR	'1' = Bit is set	'0' = Bit is cleared	x = Bit is unknown

© 2003 Microchip Technology Inc.

REGISTER 8-11: IPR2: PERIPHERAL INTERRUPT PRIORITY REGISTER 2

U-0	R/W-1	U-0	R/W-1	R/W-1	R/W-1	R/W-1	R/W-1
—	CMIP(1)	—	EEIP	BCLIP	LVDIP	TMR3IP	ECCP1IP(1)
bit 7							bit 0

bit 7 **Unimplemented:** Read as '0'

bit 6 **CMIP:** Comparator Interrupt Priority bit(1)
1 = High priority
0 = Low priority

bit 5 **Unimplemented:** Read as '0'

bit 4 **EEIP**: EEPROM Write Interrupt Priority bit
1 = High priority
0 = Low priority

bit 3 **BCLIP**: Bus Collision Interrupt Priority bit
1 = High priority
0 = Low priority

bit 2 **LVDIP**: Low Voltage Detect Interrupt Priority bit
1 = High priority
0 = Low priority

bit 1 **TMR3IP**: TMR3 Overflow Interrupt Priority bit
1 = High priority
0 = Low priority

bit 0 **ECCP1IP**: ECCP1 Interrupt Priority bit(1)
1 = High priority
0 = Low priority

Note 1: This bit is only available on PIC18F4X8 devices. For PIC18F2X8 devices, this bit is unimplemented and reads as ‘0’.

Legend:			
R = Readable bit	W = Writable bit	U = Unimplemented bit, read as ‘0’	
- n = Value at POR	‘1’ = Bit is set	‘0’ = Bit is cleared	x = Bit is unknown

REGISTER 8-12: IPR3: PERIPHERAL INTERRUPT PRIORITY REGISTER 3

R/W-1	R/W-1	R/W-1	R/W-1	R/W-1	R/W-1	R/W-1	R/W-1
IRXIP	WAKIP	ERRIP	TXB2IP	TXB1IP	TXB0IP	RXB1IP	RXB0IP
bit 7							bit 0

bit 7 **IRXIP:** Invalid Message Received Interrupt Priority bit
1 = High priority
0 = Low priority

bit 6 **WAKIP:** Bus Activity Wake-up Interrupt Priority bit
1 = High priority
0 = Low priority

bit 5 **ERRIP:** CAN bus Error Interrupt Priority bit
1 = High priority
0 = Low priority

bit 4 **TXB2IP:** Transmit Buffer 2 Interrupt Priority bit
1 = High priority
0 = Low priority

bit 3 **TXB1IP:** Transmit Buffer 1 Interrupt Priority bit
1 = High priority
0 = Low priority

bit 2 **TXB0IP:** Transmit Buffer 0 Interrupt Priority bit
1 = High priority
0 = Low priority

bit 1 **RXB1IP:** Receive Buffer 1 Interrupt Priority bit
1 = High priority
0 = Low priority

bit 0 **RXB0IP:** Receive Buffer 0 Interrupt Priority bit
1 = High priority
0 = Low priority

Legend:			
R = Readable bit	W = Writable bit	U = Unimplemented bit, read as '0'	
- n = Value at POR	'1' = Bit is set	'0' = Bit is cleared	x = Bit is unknown

© 2003 Microchip Technology Inc.

8.5 RCON Register

The Reset Control (RCON) register contains the IPEN bit, which is used to enable prioritized interrupts. The functions of the other bits in this register are discussed in more detail in Section 4.14.

REGISTER 8-13: RCON REGISTER

R/W-0	U-0	U-0	R/W-1	R-1	R-1	R/W-0	R/W-0
IPEN	—	—	$\overline{RI}$	$\overline{TO}$	$\overline{PD}$	$\overline{POR}$	$\overline{BOR}$
bit 7							bit 0

bit 7 **IPEN:** Interrupt Priority Enable bit
1 = Enable priority levels on interrupts
0 = Disable priority levels on interrupts (16CXXX Compatibility mode)

bit 6-5 **Unimplemented:** Read as '0'

bit 4 **$\overline{RI}$:** RESET Instruction Flag bit
For details of bit operation, see Register 4-3

bit 3 **$\overline{TO}$:** Watchdog Time-out Flag bit
For details of bit operation, see Register 4-3

bit 2 **$\overline{PD}$:** Power-down Detection Flag bit
For details of bit operation, see Register 4-3

bit 1 **$\overline{POR}$:** Power-on Reset Status bit
For details of bit operation, see Register 4-3

bit 0 **$\overline{BOR}$:** Brown-out Reset Status bit
For details of bit operation, see Register 4-3

Legend:			
R = Readable bit	W = Writable bit	U = Unimplemented bit, read as '0'	
- n = Value at POR	'1' = Bit is set	'0' = Bit is cleared	x = Bit is unknown

8.6 INT Interrupts

External interrupts on the RB0/INT0, RB1/INT1 and RB2/INT2 pins are edge triggered: either rising, if the corresponding INTEDGx bit is set in the INTCON2 register, or falling, if the INTEDGx bit is clear. When a valid edge appears on the RBx/INTx pin, the corresponding flag bit INTxIF is set. This interrupt can be disabled by clearing the corresponding enable bit INTxIE. Flag bit INTxIF must be cleared in software in the Interrupt Service Routine before re-enabling the interrupt. All external interrupts (INT0, INT1 and INT2) can wake-up the processor from SLEEP, if bit INTxIE was set prior to going into SLEEP. If the global interrupt enable bit GIE is set, the processor will branch to the interrupt vector following wake-up.

Interrupt priority for INT1 and INT2 is determined by the value contained in the interrupt priority bits INT1IP (INTCON3<6>) and INT2IP (INTCON3<7>). There is no priority bit associated with INT0; it is always a high priority interrupt source.

8.7 TMR0 Interrupt

In 8-bit mode (which is the default), an overflow (FFh → 00h) in the TMR0 register will set flag bit TMR0IF. In 16-bit mode, an overflow (FFFFh → 0000h) in the TMR0H:TMR0L registers will set flag bit TMR0IF. The interrupt can be enabled/disabled by setting/clearing enable bit TMR0IE (INTCON register). Interrupt priority for Timer0 is determined by the value contained in the interrupt priority bit TMR0IP (INTCON2 register). See Section 11.0 for further details on the Timer0 module.

8.8 PORTB Interrupt-on-Change

An input change on PORTB<7:4> sets flag bit RBIF (INTCON register). The interrupt can be enabled/disabled by setting/clearing enable bit RBIE (INTCON register). Interrupt priority for PORTB interrupt-on-change is determined by the value contained in the interrupt priority bit RBIP (INTCON2 register).

8.9 Context Saving During Interrupts

During an interrupt, the return PC value is saved on the stack. Additionally, the WREG, STATUS and BSR registers are saved on the fast return stack. If a fast return from interrupt is not used (see Section 4.3), the user may need to save the WREG, STATUS and BSR registers in software. Depending on the user's application, other registers may also need to be saved. Example 8-1 saves and restores the WREG, STATUS and BSR registers during an Interrupt Service Routine.

EXAMPLE 8-1: SAVING STATUS, WREG AND BSR REGISTERS IN RAM

```
MOVWF       W_TEMP                  ; W_TEMP is in Low Access bank
MOVFF       STATUS, STATUS_TEMP     ; STATUS_TEMP located anywhere
MOVFF       BSR, BSR_TEMP           ; BSR located anywhere
;
; USER ISR CODE
;
MOVFF       BSR_TEMP, BSR           ; Restore BSR
MOVF        W_TEMP, W               ; Restore WREG
MOVFF       STATUS_TEMP, STATUS     ; Restore STATUS
```


© 2003 Microchip Technology Inc.

9.0 I/O PORTS

Depending on the device selected, there are up to five general purpose I/O ports available on PIC18FXX8 devices. Some pins of the I/O ports are multiplexed with an alternate function from the peripheral features on the device. In general, when a peripheral is enabled, that pin may not be used as a general purpose I/O pin.

Each port has three registers for its operation:

- TRIS register (Data Direction register)
- PORT register (reads the levels on the pins of the device)
- LAT register (output latch)

The data latch (LAT register) is useful for read-modify-write operations on the value that the I/O pins are driving.

9.1 PORTA, TRISA and LATA Registers

PORTA is a 7-bit wide, bi-directional port. The corresponding Data Direction register is TRISA. Setting a TRISA bit (= 1) will make the corresponding PORTA pin an input (i.e., put the corresponding output driver in a High-Impedance mode). Clearing a TRISA bit (= 0) will make the corresponding PORTA pin an output (i.e., put the contents of the output latch on the selected pin). On a Power-on Reset, these pins are configured as inputs and read as '0'.

Reading the PORTA register reads the status of the pins, whereas writing to it will write to the port latch.

Read-modify-write operations on the LATA register, reads and writes the latched output value for PORTA.

The RA4 pin is multiplexed with the Timer0 module clock input to become the RA4/T0CKI pin. The RA4/T0CKI pin is a Schmitt Trigger input and an open drain output. All other RA port pins have TTL input levels and full CMOS output drivers.

The other PORTA pins are multiplexed with analog inputs and the analog VREF+ and VREF- inputs. The operation of each pin is selected by clearing/setting the control bits in the ADCON1 register (A/D Control Register 1). On a Power-on Reset, these pins are configured as analog inputs and read as '0'.

Note:	On a Power-on Reset, RA5 and RA3:RA0 are configured as analog inputs and read as ‘0’. RA6 and RA4 are configured as digital inputs.

The TRISA register controls the direction of the RA pins, even when they are being used as analog inputs. The user must ensure the bits in the TRISA register are maintained set, when using them as analog inputs.

EXAMPLE 9-1: INITIALIZING PORTA

```
CLRF   PORTA  ; Initialize PORTA by
              ; clearing output data latches
CLRF   LATA   ; Alternate method to clear
              ; output data latches
MOVLW  07h    ; Configure A/D
MOVWF  ADCON1 ; for digital inputs
MOVLW  0CFh   ; Value used to initialize
              ; data direction
MOVWF  TRISA  ; Set RA3:RA0 as inputs,
              ; RA5:RA4 as outputs
```

FIGURE 9-1: RA3:RA0 AND RA5 PINS BLOCK DIAGRAM

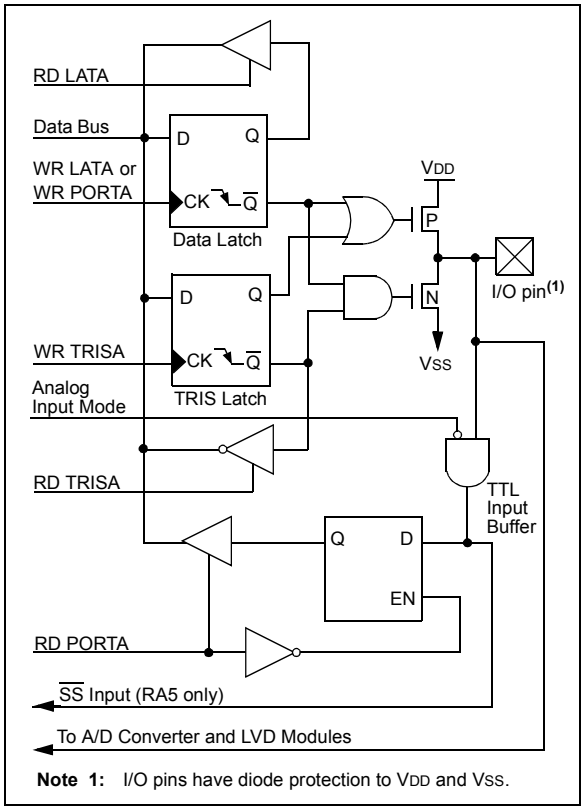

Note 1: I/O pins have diode protection to VDD and VSS.

FIGURE 9-2: RA4/T0CKI PIN BLOCK DIAGRAM

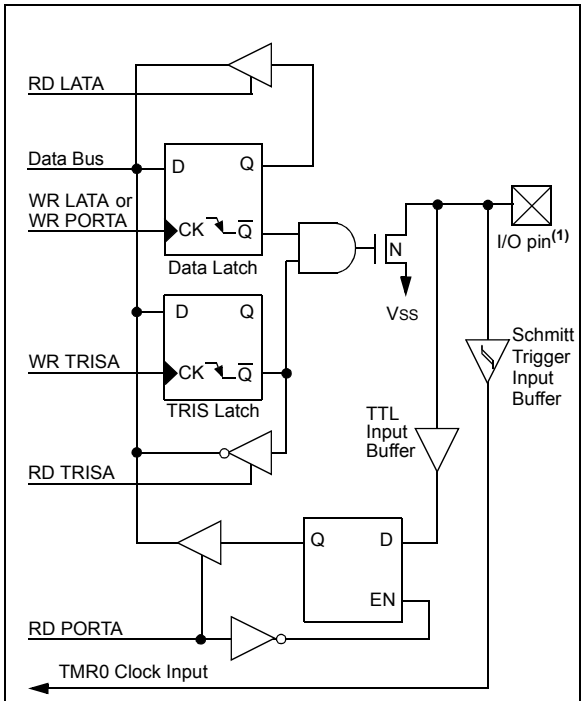

Note 1: I/O pin has diode protection to VSS only.

FIGURE 9-3: RA6/OSC2/CLKO PIN BLOCK DIAGRAM

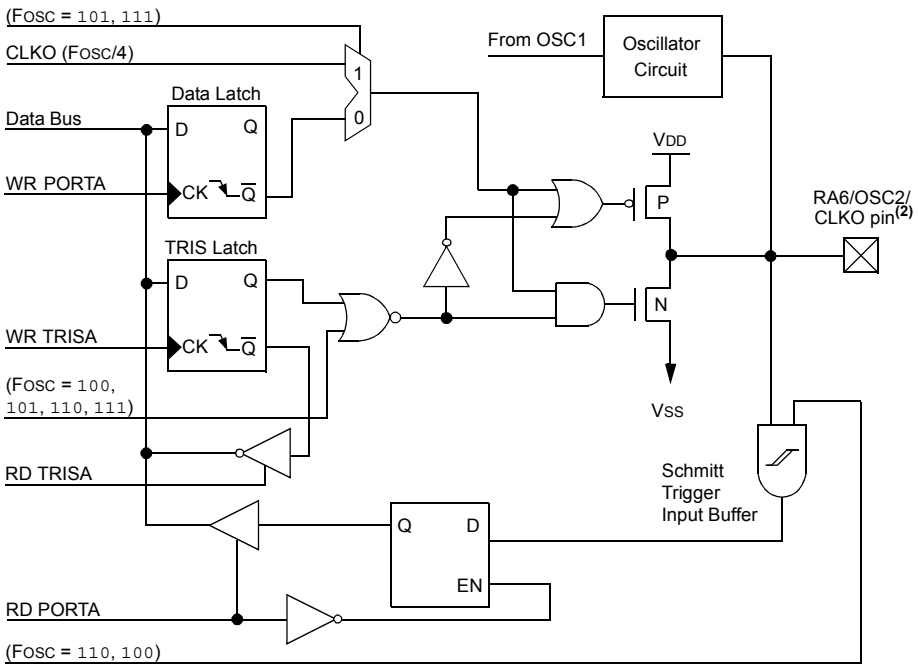

Note 1: CLKO is 1/4 of FOSC.

2: I/O pin has diode protection to VDD and VSS.

© 2003 Microchip Technology Inc.

TABLE 9-1: PORTA FUNCTIONS

Name	Bit#	Buffer	Function
RA0/AN0/CVREF	bit0	TTL	Input/output, analog input, or analog comparator voltage reference output.
RA1/AN1	bit1	TTL	Input/output or analog input.
RA2/AN2/VREF-	bit2	TTL	Input/output, analog input or VREF-.
RA3/AN3/VREF+	bit3	TTL	Input/output, analog input or VREF+.
RA4/T0CKI	bit4	ST/OD	Input/output, external clock input for Timer0, output is open drain type.
RA5/AN4/$\overline{SS}$/LVDIN	bit5	TTL	Input/output, analog input, slave select input for synchronous serial port, or low voltage detect input.
RA6/OSC2/CLKO	bit6	TTL	Input/output or oscillator clock output.

Legend: TTL = TTL input, ST = Schmitt Trigger input, OD = Open Drain

TABLE 9-2: SUMMARY OF REGISTERS ASSOCIATED WITH PORTA

Name	Bit 7	Bit 6	Bit 5	Bit 4	Bit 3	Bit 2	Bit 1	Bit 0	Value on POR, BOR	Value on all other RESETS
PORTA	—	RA6	RA5	RA4	RA3	RA2	RA1	RA0	-00x 0000	-uuu uuuu
LATA	—	Latch A Data Output Register							-xxx xxxx	-uuu uuuu
TRISA	—	PORTA Data Direction Register							-111 1111	-111 1111
ADCON1	ADFM	ADCS2	—	—	PCFG3	PCFG2	PCFG1	PCFG0	00-- 0000	uu-- uuuu

Legend: x = unknown, u = unchanged, - = unimplemented locations read as '0'. Shaded cells are not used by PORTA.

9.2 PORTB, TRISB and LATB Registers

PORTB is an 8-bit wide, bi-directional port. The corresponding Data Direction register is TRISB. Setting a TRISB bit (= 1) will make the corresponding PORTB pin an input (i.e., put the corresponding output driver in a High-Impedance mode). Clearing a TRISB bit (= 0) will make the corresponding PORTB pin an output (i.e., put the contents of the output latch on the selected pin).

Read-modify-write operations on the LATB register, read and write the latched output value for PORTB.

EXAMPLE 9-2: INITIALIZING PORTB

```
CLRF    PORTB       ; Initialize PORTB by
                    ; clearing output
                    ; data latches
CLRF    LATB        ; Alternate method
                    ; to clear output
                    ; data latches
MOVLW   0CFh        ; Value used to
                    ; initialize data
                    ; direction
MOVWF   TRISB       ; Set RB3:RB0 as inputs
                    ; RB5:RB4 as outputs
                    ; RB7:RB6 as inputs
```

Each of the PORTB pins has a weak internal pull-up. A single control bit can turn on all the pull-ups. This is performed by clearing bit $\overline{\text{RBPU}}$ (INTCON2 register). The weak pull-up is automatically turned off when the port pin is configured as an output. The pull-ups are disabled on a Power-on Reset.

Four of the PORTB pins (RB7:RB4) have an interrupt-on-change feature. Only pins configured as inputs can cause this interrupt to occur (i.e., any RB7:RB4 pin configured as an output is excluded from the interrupt-on-change comparison). The input pins (of RB7:RB4) are compared with the old value latched on the last read of PORTB. The “mismatch” outputs of RB7:RB4 are ORed together to generate the RB Port Change Interrupt with flag bit RBIF (INTCON register).

This interrupt can wake the device from SLEEP. The user, in the Interrupt Service Routine, can clear the interrupt in the following manner:

a) Any read or write of PORTB (except with the MOVFF instruction). This will end the mismatch condition.

b) Clear flag bit RBIF.

A mismatch condition will continue to set flag bit RBIF. Reading PORTB will end the mismatch condition and allow flag bit RBIF to be cleared.

The interrupt-on-change feature is recommended for wake-up on key depression operation and operations where PORTB is only used for the interrupt-on-change feature. Polling of PORTB is not recommended while using the interrupt-on-change feature.

Note 1: While in Low Voltage ICSP mode, the RB5 can no longer be used as a general purpose I/O pin, and should not be held low during normal operation to protect against inadvertent ICSP mode entry.

2: When using Low Voltage ICSP programming (LVP), the pull-up on RB5 becomes disabled. If TRISB bit 5 is cleared, thereby setting RB5 as an output, LATB bit 5 must also be cleared for proper operation.

© 2003 Microchip Technology Inc.

FIGURE 9-4: RB7:RB4 PINS BLOCK DIAGRAM

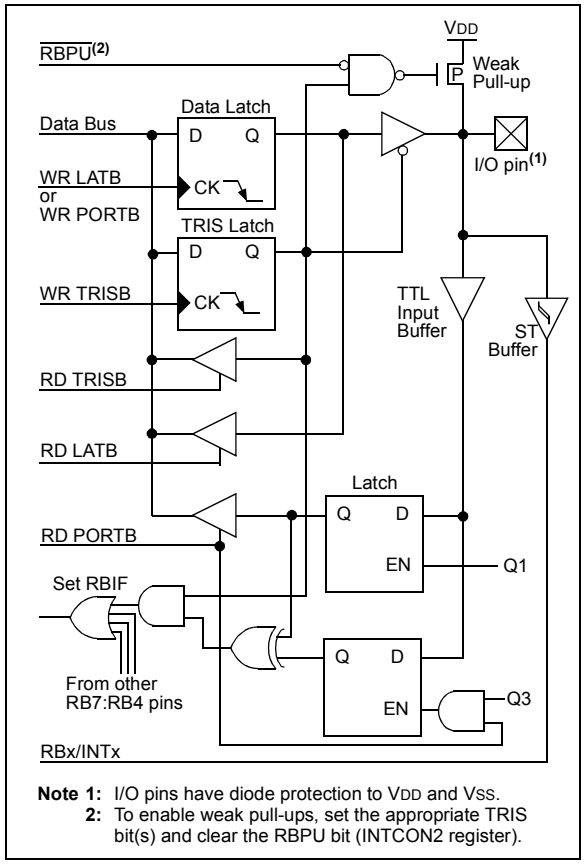

Note 1: I/O pins have diode protection to VDD and VSS.
2: To enable weak pull-ups, set the appropriate TRIS bit(s) and clear the RBPU bit (INTCON2 register).

FIGURE 9-5: RB1:RB0 PINS BLOCK DIAGRAM

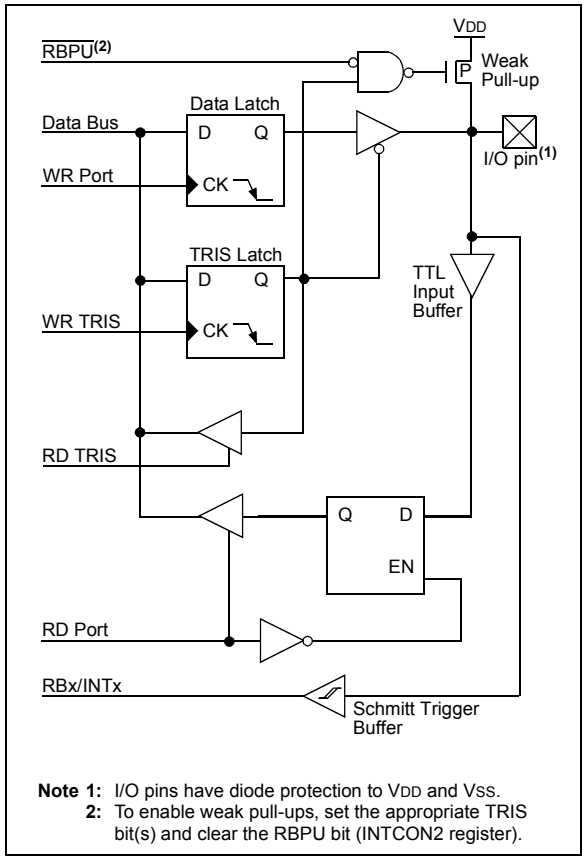

Note 1: I/O pins have diode protection to VDD and VSS.
2: To enable weak pull-ups, set the appropriate TRIS bit(s) and clear the RBPU bit (INTCON2 register).

FIGURE 9-6: RB2/CANTX BLOCK DIAGRAM

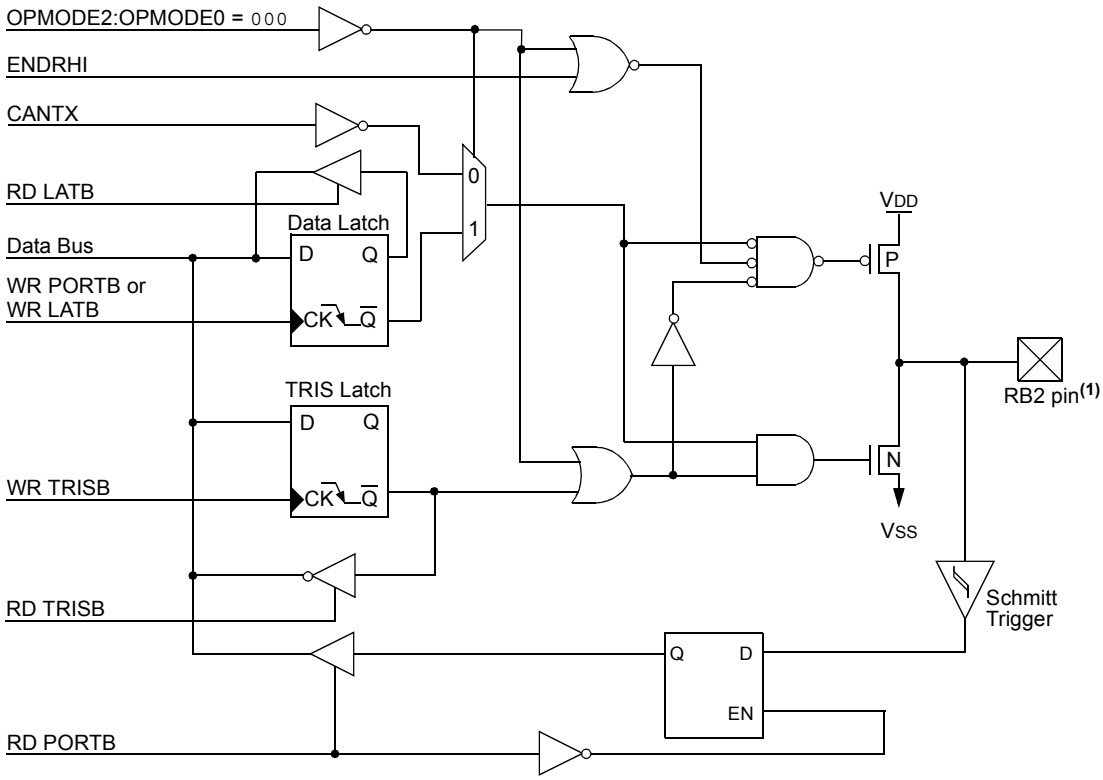

Note 1: I/O pin has diode protection to VDD and VSS.

FIGURE 9-7: BLOCK DIAGRAM OF RB3/CANRX PIN

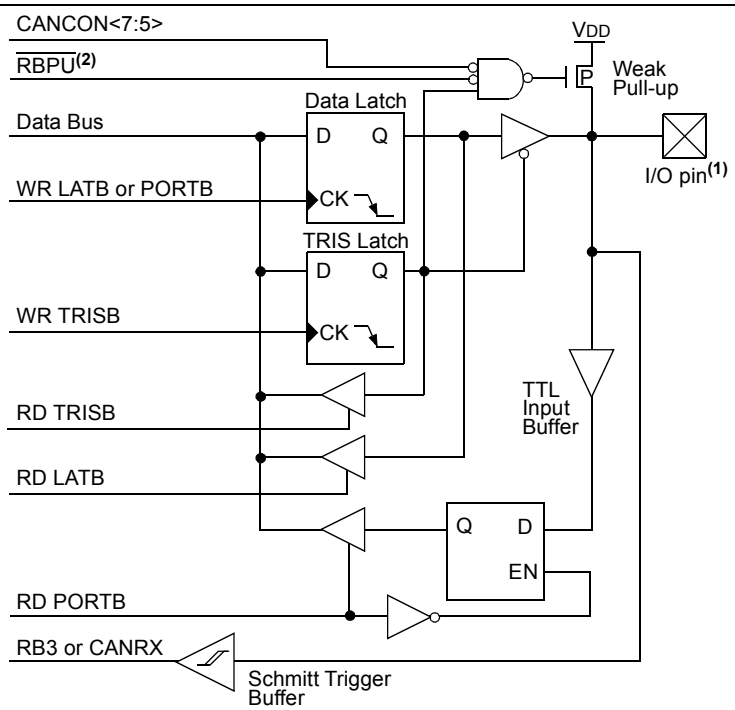

Note 1: I/O pins have diode protection to VDD and VSS.

2: To enable weak pull-ups, set the appropriate TRIS bit(s) and clear the $\overline{\text{RBPU}}$ bit (INTCON2<7>).

© 2003 Microchip Technology Inc.

TABLE 9-3: PORTB FUNCTIONS

Name	Bit#	Buffer	Function
RB0/INT0	bit0	TTL/ST(1)	Input/output pin or external interrupt 0 input. Internal software programmable weak pull-up.
RB1/INT1	bit1	TTL/ST(1)	Input/output pin or external interrupt 1 input. Internal software programmable weak pull-up.
RB2/CANTX/ INT2/	bit2	TTL/ST(1)	Input/output pin, CAN bus transmit pin or external interrupt 2 input. Internal software programmable weak pull-up.
RB3/CANRX	bit3	TTL	Input/output pin or CAN bus receive pin. Internal software programmable weak pull-up.
RB4	bit4	TTL	Input/output pin (with interrupt-on-change). Internal software programmable weak pull-up.
RB5/PGM	bit5	TTL	Input/output pin (with interrupt-on-change). Internal software programmable weak pull-up. Low voltage serial programming enable.
RB6/PGC	bit6	TTL/ST(2)	Input/output pin (with interrupt-on-change). Internal software programmable weak pull-up. Serial programming clock.
RB7/PGD	bit7	TTL/ST(2)	Input/output pin (with interrupt-on-change). Internal software programmable weak pull-up. Serial programming data.

Legend: TTL = TTL input, ST = Schmitt Trigger input

Note 1: This buffer is a Schmitt Trigger input when configured as the external interrupt.

2: This buffer is a Schmitt Trigger input when used in Serial Programming mode.

TABLE 9-4: SUMMARY OF REGISTERS ASSOCIATED WITH PORTB

Name	Bit 7	Bit 6	Bit 5	Bit 4	Bit 3	Bit 2	Bit 1	Bit 0	Value on POR, BOR	Value on all other RESETS
PORTB	RB7	RB6	RB5	RB4	RB3	RB2	RB1	RB0	xxxx xxxx	uuuu uuuu
LATB	LATB Data Output Register								xxxx xxxx	uuuu uuuu
TRISB	PORTB Data Direction Register								1111 1111	1111 1111
INTCON	GIE/GIEH	PEIE/GIEL	TMR0IE	INT0IE	RBIE	TMR0IF	INT0IF	RBIF	0000 000x	0000 000u
INTCON2	$\overline{\text{RBPU}}$	INTEDG0	INTEDG1	INTEDG2	—	TMR0IP	—	RBIP	1111 -1-1	1111 -1-1
INTCON3	INT2IP	INT1IP	—	INT2IE	INT1IE	—	INT2IF	INT1IF	11-0 0-00	11-0 0-00

Legend: x = unknown, u = unchanged. Shaded cells are not used by PORTB.

9.3 PORTC, TRISC and LATC Registers

PORTC is an 8-bit wide, bi-directional port. The corresponding Data Direction register is TRISC. Setting a TRISC bit (= 1) will make the corresponding PORTC pin an input (i.e., put the corresponding output driver in a High-Impedance mode). Clearing a TRISC bit (= 0) will make the corresponding PORTC pin an output (i.e., put the contents of the output latch on the selected pin).

Read-modify-write operations on the LATC register, read and write the latched output value for PORTC.

PORTC is multiplexed with several peripheral functions (Table 9-5). PORTC pins have Schmitt Trigger input buffers.

When enabling peripheral functions, care should be taken in defining TRIS bits for each PORTC pin. Some peripherals override the TRIS bit to make a pin an output, while other peripherals override the TRIS bit to make a pin an input. The user should refer to the corresponding peripheral section for the correct TRIS bit settings.

The pin override value is not loaded into the TRIS register. This allows read-modify-write of the TRIS register, without concern due to peripheral overrides.

EXAMPLE 9-3: INITIALIZING PORTC

```
CLRF    PORTC       ; Initialize PORTC by
                    ; clearing output
                    ; data latches
CLRF    LATC        ; Alternate method
                    ; to clear output
                    ; data latches
MOVLW   0CFh        ; Value used to
                    ; initialize data
                    ; direction
MOVWF   TRISC       ; Set RC3:RC0 as inputs
                    ; RC5:RC4 as outputs
                    ; RC7:RC6 as inputs
```

FIGURE 9-8: PORTC BLOCK DIAGRAM (PERIPHERAL OUTPUT OVERRIDE)

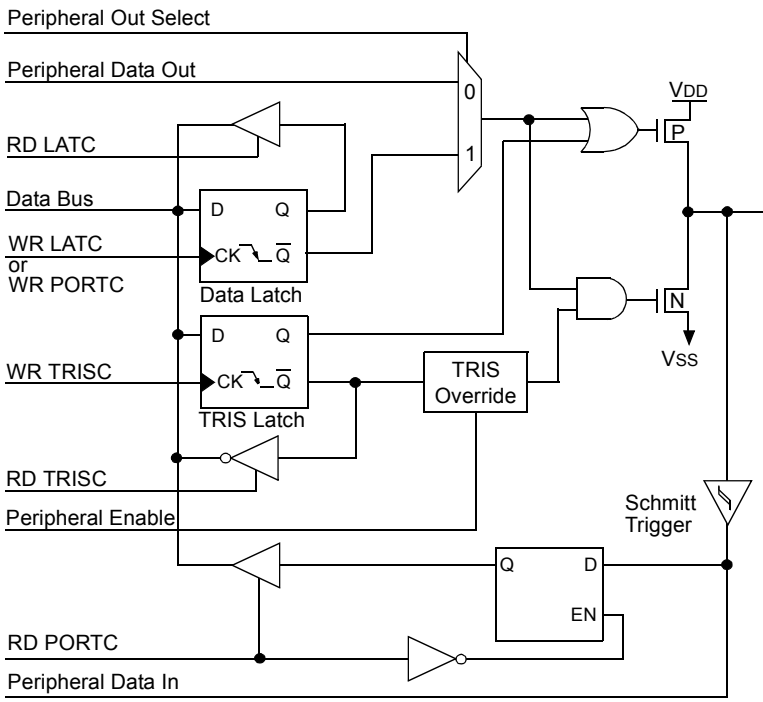

TRIS OVERRIDE

Pin	Override	Peripheral
RC0	Yes	Timer1 OSC for Timer1/Timer3
RC1	Yes	Timer1 OSC for Timer1/Timer3
RC2	No	—
RC3	Yes	SPI/I^2C Master Clock
RC4	Yes	I^2C Data Out
RC5	Yes	SPI Data Out
RC6	Yes	USART Async Xmit, Sync Clock
RC7	Yes	USART Sync Data Out

Note 1: I/O pins have diode protection to VDD and VSS.

© 2003 Microchip Technology Inc.

TABLE 9-5: PORTC FUNCTIONS

Name	Bit#	Buffer Type	Function
RC0/T1OSO/T1CKI	bit0	ST	Input/output port pin, Timer1 oscillator output or Timer1/Timer3 clock input.
RC1/T1OSI	bit1	ST	Input/output port pin or Timer1 oscillator input.
RC2/CCP1	bit2	ST	Input/output port pin or Capture1 input/Compare1 output/PWM1 output.
RC3/SCK/SCL	bit3	ST	Input/output port pin or Synchronous Serial clock for SPI/I^2C.
RC4/SDI/SDA	bit4	ST	Input/output port pin or SPI Data in (SPI mode) or Data I/O (I^2C mode).
RC5/SDO	bit5	ST	Input/output port pin or Synchronous Serial Port data output.
RC6/TX/CK	bit6	ST	Input/output port pin, Addressable USART Asynchronous Transmit or Addressable USART Synchronous Clock.
RC7/RX/DT	bit7	ST	Input/output port pin, Addressable USART Asynchronous Receive or Addressable USART Synchronous Data.

Legend: ST = Schmitt Trigger input

TABLE 9-6: SUMMARY OF REGISTERS ASSOCIATED WITH PORTC

Name	Bit 7	Bit 6	Bit 5	Bit 4	Bit 3	Bit 2	Bit 1	Bit 0	Value on POR, BOR	Value on all other RESETS
PORTC	RC7	RC6	RC5	RC4	RC3	RC2	RC1	RC0	xxxx xxxx	uuuu uuuu
LATC	LATC Data Output Register								xxxx xxxx	uuuu uuuu
TRISC	PORTC Data Direction Register								1111 1111	1111 1111

Legend: x = unknown, u = unchanged

9.4 PORTD, TRISD and LATD Registers

Note: This port is only available on the PIC18F448 and PIC18F458.

PORTD is an 8-bit wide, bi-directional port. The corresponding Data Direction register for the port is TRISD. Setting a TRISD bit (= 1) will make the corresponding PORTD pin an input (i.e., put the corresponding output driver in a High-Impedance mode). Clearing a TRISD bit (= 0) will make the corresponding PORTD pin an output (i.e., put the contents of the output latch on the selected pin).

Read-modify-write operations on the LATD register reads and writes the latched output value for PORTD.

PORTD is uses Schmitt Trigger input buffers. Each pin is individually configurable as an input or output.

PORTD can be configured as an 8-bit wide microprocessor port (Parallel Slave Port, or PSP) by setting the control bit PSPMODE (TRISE<4>). In this mode, the input buffers are TTL. See Section 10.0 for additional information on the Parallel Slave Port.

PORTD is also multiplexed with the analog comparator module and the ECCP module.

EXAMPLE 9-4: INITIALIZING PORTD

```
CLRF    PORTD       ; Initialize PORTD by
                    ; clearing output
                    ; data latches
CLRF    LATD        ; Alternate method
                    ; to clear output
                    ; data latches
MOVLW   07h         ; comparator off
MOVWF   CMCON
MOVLW   0CFh        ; Value used to
                    ; initialize data
                    ; direction
MOVWF   TRISD       ; Set RD3:RD0 as inputs
                    ; RD5:RD4 as outputs
                    ; RD7:RD6 as inputs
```

FIGURE 9-9: PORTD BLOCK DIAGRAM IN I/O PORT MODE

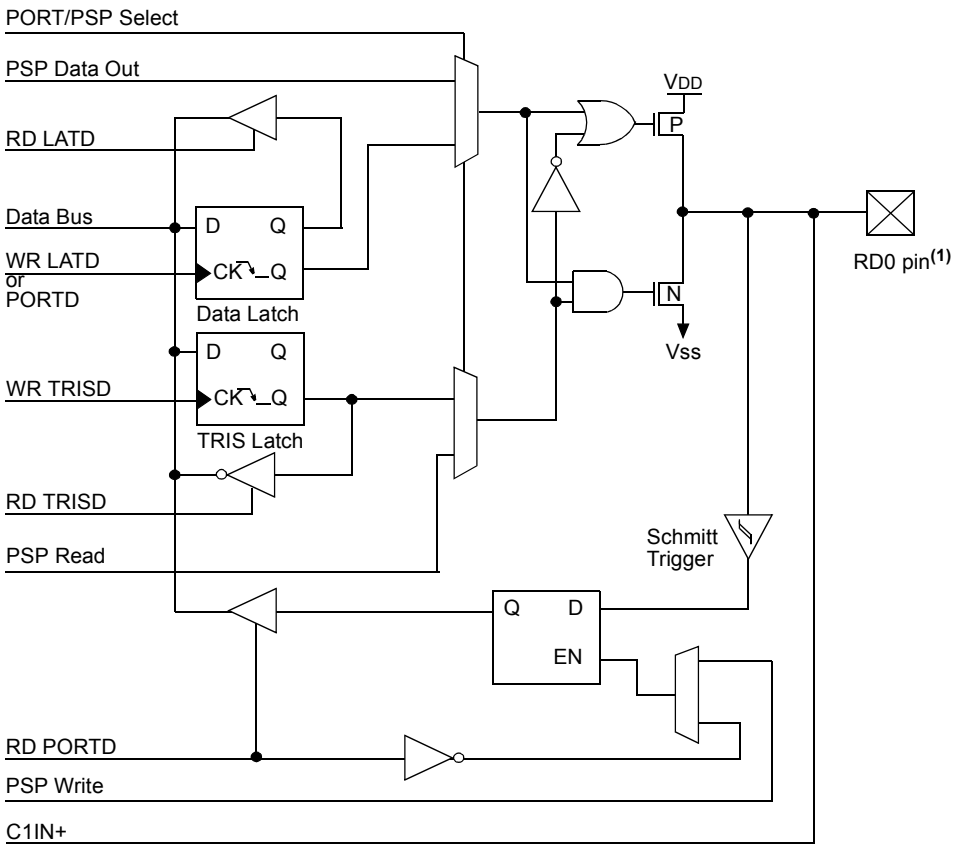

Note 1: I/O pins have diode protection to VDD and VSS.

© 2003 Microchip Technology Inc.

TABLE 9-7: PORTD FUNCTIONS

Name	Bit#	Buffer Type	Function
RD0/PSP0/C1IN+	bit0	ST/TTL(1)	Input/output port pin, parallel slave port bit0 or C1IN+ Comparator input.
RD1/PSP1/C1IN-	bit1	ST/TTL(1)	Input/output port pin, parallel slave port bit1 or C1IN- Comparator input.
RD2/PSP2/C2IN+	bit2	ST/TTL(1)	Input/output port pin, parallel slave port bit2 or C2IN+ Comparator input.
RD3/PSP3/C2IN-	bit3	ST/TTL(1)	Input/output port pin, parallel slave port bit3 or C2IN- Comparator input.
RD4/PSP4/ECCP1/P1A	bit4	ST/TTL(1)	Input/output port pin, parallel slave port bit4 or ECCP1/P1A pin.
RD5/PSP5/P1B	bit5	ST/TTL(1)	Input/output port pin, parallel slave port bit5 or ECCP1/P1B pin.
RD6/PSP6/P1C	bit6	ST/TTL(1)	Input/output port pin, parallel slave port bit6 or ECCP1/P1C pin.
RD7/PSP7/P1D	bit7	ST/TTL(1)	Input/output port pin, parallel slave port bit7 or ECCP1/P1D pin.

Legend: ST = Schmitt Trigger input, TTL = TTL input

Note 1: Input buffers are Schmitt Triggers when in I/O mode and TTL buffers when in Parallel Slave Port mode.

TABLE 9-8: SUMMARY OF REGISTERS ASSOCIATED WITH PORTD

Name	Bit 7	Bit 6	Bit 5	Bit 4	Bit 3	Bit 2	Bit 1	Bit 0	Value on POR, BOR	Value on all other RESETS
PORTD	RD7	RD6	RD5	RD4	RD3	RD2	RD1	RD0	xxxx xxxx	uuuu uuuu
LATD	LATD Data Output Register								xxxx xxxx	uuuu uuuu
TRISD	PORTD Data Direction Register								1111 1111	1111 1111
TRISE	IBF	OBF	IBOV	PSPMODE	—	TRISE2	TRISE1	TRISE0	0000 -111	0000 -111

Legend: x = unknown, u = unchanged, - = unimplemented, read as '0'. Shaded cells are not used by PORTD.

9.5 PORTE, TRISE and LATE Registers

Note: This port is only available on the PIC18F448 and PIC18F458.

PORTE is a 3-bit wide, bi-directional port. PORTE has three pins (RE0/AN5/$\overline{RD}$, RE1/AN6/$\overline{WR}$/C1OUT and RE2/AN7/$\overline{CS}$/C2OUT), which are individually configurable as inputs or outputs. These pins have Schmitt Trigger input buffers.

Read-modify-write operations on the LATE register, reads and writes the latched output value for PORTE.

The corresponding Data Direction register for the port is TRISE. Setting a TRISE bit (= 1) will make the corresponding PORTE pin an input (i.e., put the corresponding output driver in a High-Impedance mode). Clearing a TRISE bit (= 0) will make the corresponding PORTE pin an output (i.e., put the contents of the output latch on the selected pin).

The TRISE register also controls the operation of the Parallel Slave Port, through the control bits in the upper half of the register. These are shown in Register 9-1.

When the Parallel Slave Port is active, the PORTE pins function as its control inputs. For additional details, refer to Section 10.0.

PORTE pins are also multiplexed with inputs for the A/D converter and outputs for the analog comparators. When selected as an analog input, these pins will read as '0's. Direction bits TRISE<2:0> control the direction of the RE pins, even when they are being used as analog inputs. The user must make sure to keep the pins configured as inputs when using them as analog inputs.

EXAMPLE 9-5: INITIALIZING PORTE

```
CLRF    PORTE       ; Initialize PORTE by
                    ; clearing output
                    ; data latches
CLRF    LATE        ; Alternate method
                    ; to clear output
                    ; data latches
MOVLW   03h         ; Value used to
                    ; initialize data
                    ; direction
MOVWF   TRISE       ; Set RE1:RE0 as inputs
                    ; RE2 as an output
                    ; (RE4=0 - PSPMODE Off)
```

FIGURE 9-10: PORTE BLOCK DIAGRAM

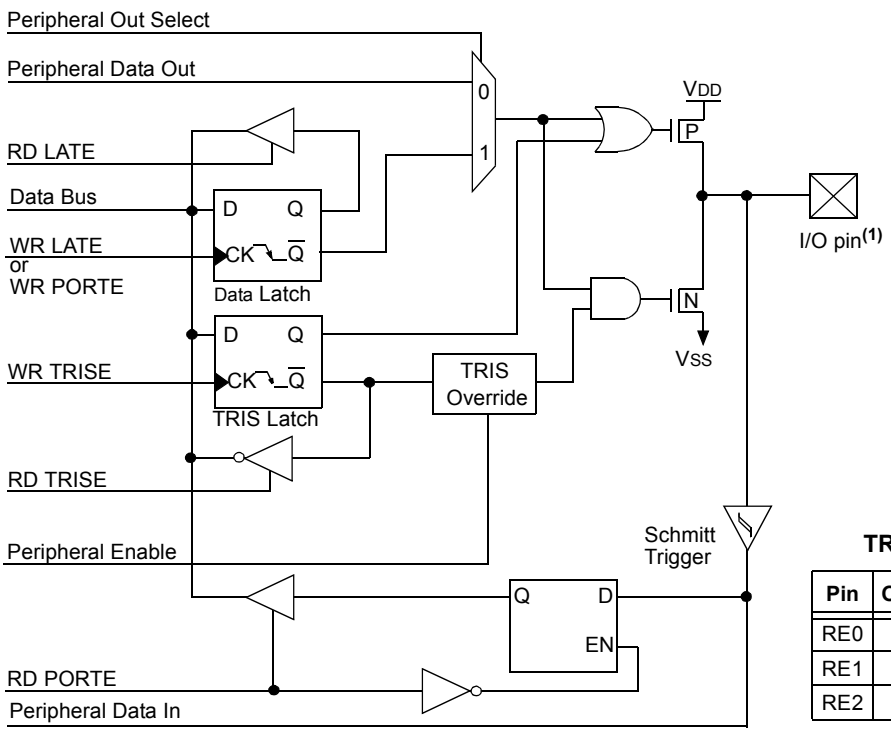

TRIS OVERRIDE

Pin	Override	Peripheral
RE0	Yes	PSP
RE1	Yes	PSP
RE2	Yes	PSP

Note 1: I/O pins have diode protection to VDD and VSS.

© 2003 Microchip Technology Inc.

REGISTER 9-1: TRISE REGISTER

R-0	R-0	R/W-0	R/W-0	U-0	R/W-1	R/W-1	R/W-1
IBF	OBF	IBOV	PSPMODE	—	TRISE2	TRISE1	TRISE0
bit 7							bit 0

bit 7 **IBF:** Input Buffer Full Status bit
1 = A word has been received and waiting to be read by the CPU
0 = No word has been received

bit 6 **OBF**: Output Buffer Full Status bit
1 = The output buffer still holds a previously written word
0 = The output buffer has been read

bit 5 **IBOV**: Input Buffer Overflow Detect bit (in Microprocessor mode)
1 = A write occurred when a previously input word has not been read (must be cleared in software)
0 = No overflow occurred

bit 4 **PSPMODE**: Parallel Slave Port Mode Select bit
1 = Parallel Slave Port mode
0 = General Purpose I/O mode

bit 3 **Unimplemented:** Read as '0'

bit 2 **TRISE2**: RE2 Direction Control bit
1 = Input
0 = Output

bit 1 **TRISE1**: RE1 Direction Control bit
1 = Input
0 = Output

bit 0 **TRISE0**: RE0 Direction Control bit
1 = Input
0 = Output

Legend:			
R = Readable bit	W = Writable bit	U = Unimplemented bit, read as ‘0’	
- n = Value at POR	‘1’ = Bit is set	‘0’ = Bit is cleared	x = Bit is unknown

TABLE 9-9: PORTE FUNCTIONS

Name	Bit#	Buffer Type	Function
RE0/AN5/$\overline{RD}$	bit0	ST/TTL(1)	Input/output port pin, analog input or read control input in Parallel Slave Port mode.
RE1/AN6/$\overline{WR}$/C1OUT	bit1	ST/TTL(1)	Input/output port pin, analog input, write control input in Parallel Slave Port mode or Comparator 1 output.
RE2/AN7/$\overline{CS}$/C2OUT	bit2	ST/TTL(1)	Input/output port pin, analog input, chip select control input in Parallel Slave Port mode or Comparator 2 output.

Legend: ST = Schmitt Trigger input, TTL = TTL input

Note 1: Input buffers are Schmitt Triggers when in I/O mode and TTL buffers when in Parallel Slave Port mode.

TABLE 9-10: SUMMARY OF REGISTERS ASSOCIATED WITH PORTE

Name	Bit 7	Bit 6	Bit 5	Bit 4	Bit 3	Bit 2	Bit 1	Bit 0	Value on POR, BOR	Value on all other RESETS
TRISE	IBF	OBF	IBOV	PSPMODE	—	TRISE2	TRISE1	TRISE0	0000 -111	0000 -111
PORTE	—	—	—	—	—	Read PORTE pin/ Write PORTE Data Latch			---- -xxx	---- -uuu
LATE	—	—	—	—	—	Read PORTE Data Latch/ Write PORTE Data Latch			---- -xxx	---- -uuu
ADCON1	ADFM	ADCS2	—	—	PCFG3	PCFG2	PCFG1	PCFG0	00-- 0000	00-- 0000

Legend: x = unknown, u = unchanged, - = unimplemented, read as '0'. Shaded cells are not used by PORTE.

© 2003 Microchip Technology Inc.

10.0 PARALLEL SLAVE PORT

Note: The Parallel Slave Port is only available on PIC18F4X8 devices.

In addition to its function as a general I/O port, PORTD can also operate as an 8-bit wide Parallel Slave Port (PSP), or microprocessor port. PSP operation is controlled by the 4 upper bits of the TRISE register (Register 9-1). Setting control bit PSPMODE (TRISE<4>) enables PSP operation. In Slave mode, the port is asynchronously readable and writable by the external world.

The PSP can directly interface to an 8-bit microprocessor data bus. The external microprocessor can read or write the PORTD latch as an 8-bit latch. Setting the control bit PSPMODE enables the PORTE I/O pins to become control inputs for the microprocessor port. When set, port pin RE0 is the $\overline{RD}$ input, RE1 is the $\overline{WR}$ input, and RE2 is the $\overline{CS}$ (chip select) input. For this functionality, the corresponding data direction bits of the TRISE register (TRISE<2:0>) must be configured as inputs (set).

A write to the PSP occurs when both the $\overline{CS}$ and $\overline{WR}$ lines are first detected low. A read from the PSP occurs when both the $\overline{CS}$ and $\overline{RD}$ lines are first detected low. The timing for the control signals in Write and Read modes is shown in Figure 10-2 and Figure 10-3, respectively.

FIGURE 10-1: PORTD AND PORTE BLOCK DIAGRAM (PARALLEL SLAVE PORT)

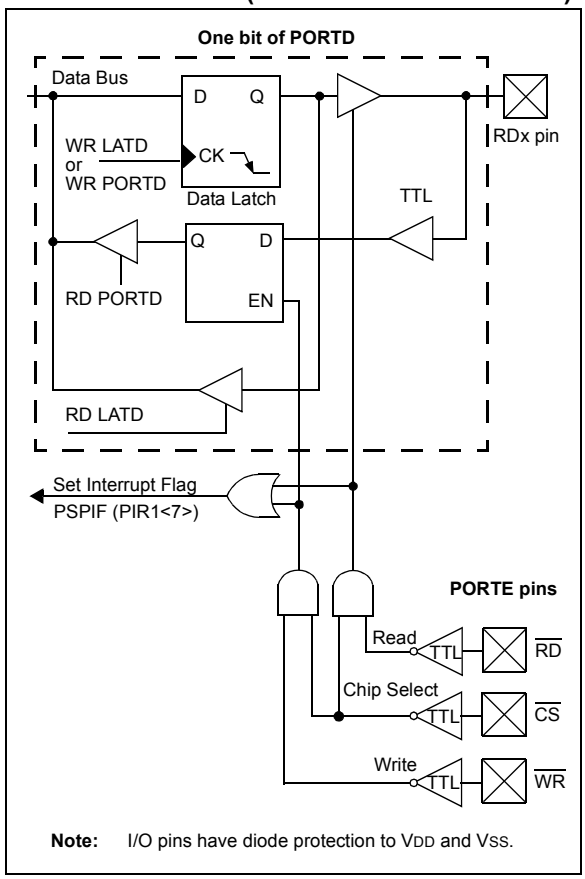

Note: I/O pins have diode protection to VDD and VSS.

FIGURE 10-2: PARALLEL SLAVE PORT WRITE WAVEFORMS

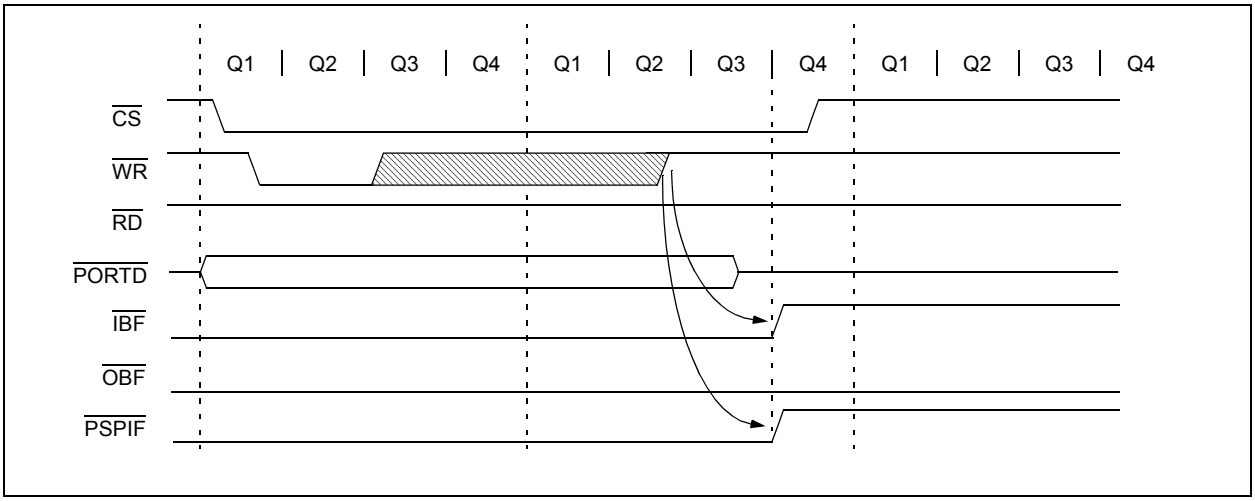

FIGURE 10-3: PARALLEL SLAVE PORT READ WAVEFORMS

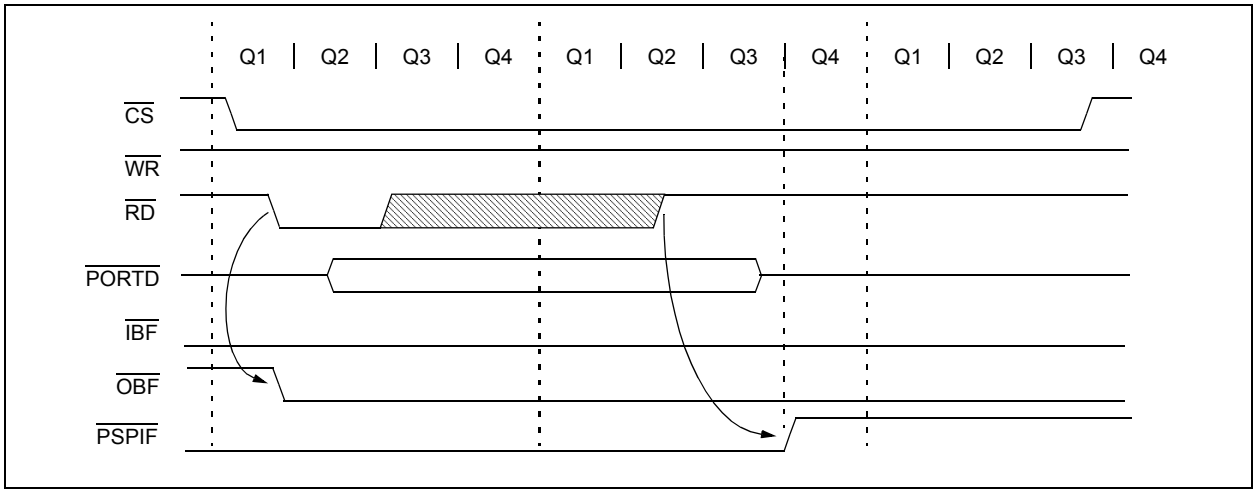

TABLE 10-1: REGISTERS ASSOCIATED WITH PARALLEL SLAVE PORT

Name	Bit 7	Bit 6	Bit 5	Bit 4	Bit 3	Bit 2	Bit 1	Bit 0	Value on POR, BOR	Value on all other RESETS
PORTD	Port Data Latch when written; Port pins when read								xxxx xxxx	uuuu uuuu
LATD	LATD Data Output bits								xxxx xxxx	uuuu uuuu
TRISD	PORTD Data Direction bits								1111 1111	1111 1111
PORTE	—	—	—	—	—	RE2	RE1	RE0	---- -000	---- -000
LATE	LATE Data Output bits								---- -xxx	---- -uuu
TRISE	IBF	OBF	IBOV	PSPMODE	—	PORTE Data Direction bits			0000 -111	0000 -111
INTCON	GIE/GIEH	PEIE/GIEL	TMR0IE	INT0IE	RBIE	TMR0IF	INT0IF	RBIF	0000 000x	0000 000u
PIR1	PSPIF	ADIF	RCIF	TXIF	SSPIF	CCP1IF	TMR2IF	TMR1IF	0000 0000	0000 0000
PIE1	PSPIE	ADIE	RCIE	TXIE	SSPIE	CCP1IE	TMR2IE	TMR1IE	0000 0000	0000 0000
IPR1	PSPIP	ADIP	RCIP	TXIP	SSPIP	CCP1IP	TMR2IP	TMR1IP	1111 1111	1111 1111

Legend: x = unknown, u = unchanged, - = unimplemented, read as '0'. Shaded cells are not used by the Parallel Slave Port.

© 2003 Microchip Technology Inc.

11.0 TIMER0 MODULE

The Timer0 module has the following features:

- Software selectable as an 8-bit or 16-bit timer/counter
- Readable and writable
- Dedicated 8-bit software programmable prescaler
- Clock source selectable to be external or internal
- Interrupt-on-overflow from FFh to 00h in 8-bit mode, and FFFFh to 0000h in 16-bit mode
- Edge select for external clock

Register 11-1 shows the Timer0 Control register (T0CON).

Figure 11-1 shows a simplified block diagram of the Timer0 module in 8-bit mode and Figure 11-2 shows a simplified block diagram of the Timer0 module in 16-bit mode.

The T0CON register is a readable and writable register that controls all the aspects of Timer0, including the prescale selection.

Note:	Timer0 is enabled on POR.

REGISTER 11-1: T0CON REGISTER

R/W-1	R/W-1	R/W-1	R/W-1	R/W-1	R/W-1	R/W-1	R/W-1
TMR0ON	T08BIT	T0CS	T0SE	PSA	T0PS2	T0PS1	T0PS0
bit 7							bit 0

bit 7 **TMR0ON:** Timer0 On/Off Control bit
1 = Enables Timer0
0 = Stops Timer0

bit 6 **T08BIT**: Timer0 8-bit/16-bit Control bit
1 = Timer0 is configured as an 8-bit timer/counter
0 = Timer0 is configured as a 16-bit timer/counter

bit 5 **T0CS**: Timer0 Clock Source Select bit
1 = Transition on T0CKI pin
0 = Internal instruction cycle clock (CLKO)

bit 4 **T0SE**: Timer0 Source Edge Select bit
1 = Increment on high-to-low transition on T0CKI pin
0 = Increment on low-to-high transition on T0CKI pin

bit 3 **PSA**: Timer0 Prescaler Assignment bit
1 = TImer0 prescaler is NOT assigned. Timer0 clock input bypasses prescaler.
0 = Timer0 prescaler is assigned. Timer0 clock input comes from prescaler output.

bit 2-0 **T0PS2:T0PS0**: Timer0 Prescaler Select bits
111 = 1:256 prescale value
110 = 1:128 prescale value
101 = 1:64 prescale value
100 = 1:32 prescale value
011 = 1:16 prescale value
010 = 1:8 prescale value
001 = 1:4 prescale value
000 = 1:2 prescale value

Legend:			
R = Readable bit	W = Writable bit	U = Unimplemented bit, read as ‘0’	
- n = Value at POR	‘1’ = Bit is set	‘0’ = Bit is cleared	x = Bit is unknown

FIGURE 11-1: TIMER0 BLOCK DIAGRAM IN 8-BIT MODE

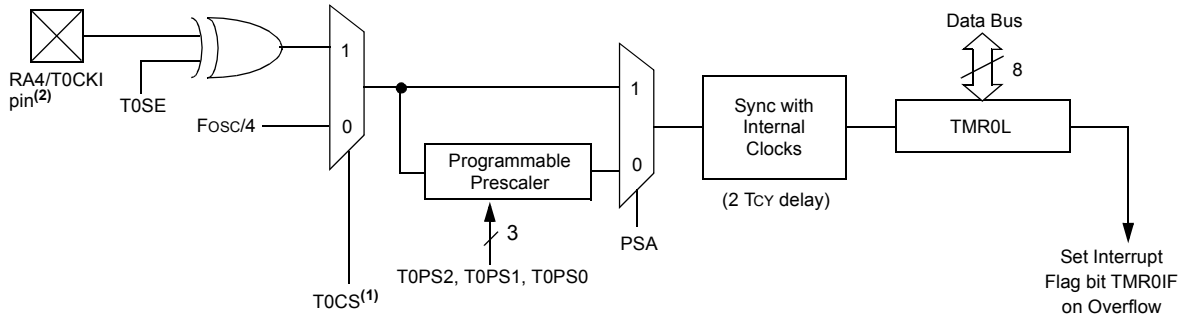

Note 1: Upon RESET, Timer0 is enabled in 8-bit mode with clock input from T0CKI max. prescale.

2: I/O pins have diode protection to VDD and VSS.

FIGURE 11-2: TIMER0 BLOCK DIAGRAM IN 16-BIT MODE

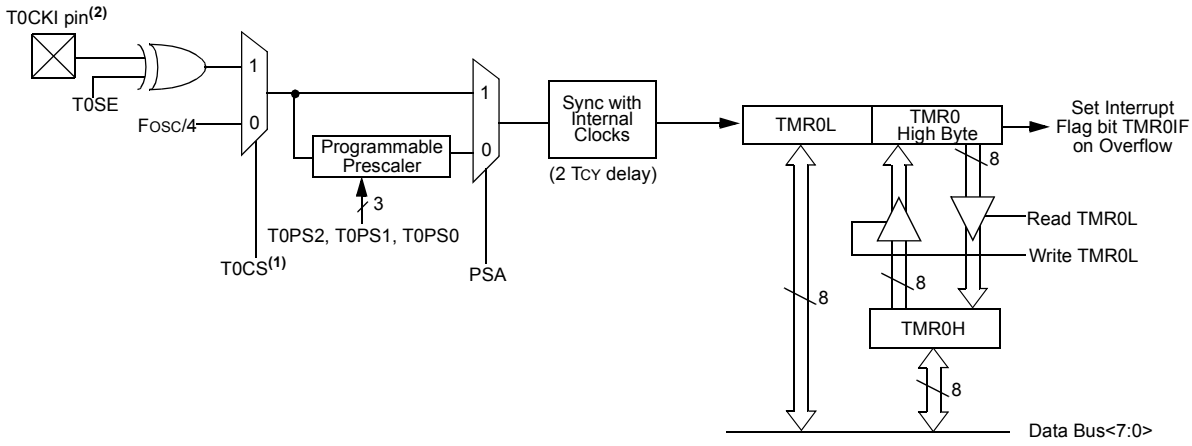

Note 1: Upon RESET, Timer0 is enabled in 8-bit mode with clock input from T0CKI max. prescale.

2: I/O pins have diode protection to VDD and VSS.

© 2003 Microchip Technology Inc.

11.1 Timer0 Operation

Timer0 can operate as a timer or as a counter.

Timer mode is selected by clearing the T0CS bit. In Timer mode, the Timer0 module will increment every instruction cycle (without prescaler). If the TMR0L register is written, the increment is inhibited for the following two instruction cycles. The user can work around this by writing an adjusted value to the TMR0L register.

Counter mode is selected by setting the T0CS bit. In Counter mode, Timer0 will increment either on every rising, or falling edge of pin RA4/T0CKI. The incrementing edge is determined by the Timer0 Source Edge Select bit (T0SE). Clearing the T0SE bit selects the rising edge. Restrictions on the external clock input are discussed below.

When an external clock input is used for Timer0, it must meet certain requirements. The requirements ensure the external clock can be synchronized with the internal phase clock (TOSC). Also, there is a delay in the actual incrementing of Timer0 after synchronization.

11.2 Prescaler

An 8-bit counter is available as a prescaler for the Timer0 module. The prescaler is not readable or writable.

The PSA and T0PS2:T0PS0 bits determine the prescaler assignment and prescale ratio.

Clearing bit PSA will assign the prescaler to the Timer0 module. When the prescaler is assigned to the Timer0 module, prescale values of 1:2, 1:4, ..., 1:256 are selectable.

When assigned to the Timer0 module, all instructions writing to the TMR0 register (e.g. `CLRF TMR0, MOVWF TMR0, BSF TMR0, x`.... etc.) will clear the prescaler count.

Note:	Writing to TMR0 when the prescaler is assigned to Timer0, will clear the prescaler count but will not change the prescaler assignment.

11.2.1 SWITCHING PRESCALER ASSIGNMENT

The prescaler assignment is fully under software control (i.e., it can be changed “on-the-fly” during program execution).

11.3 Timer0 Interrupt

The TMR0 interrupt is generated when the TMR0 register overflows from FFh to 00h in 8-bit mode, or FFFFh to 0000h in 16-bit mode. This overflow sets the TMR0IF bit. The interrupt can be masked by clearing the TMR0IE bit. The TMR0IF bit must be cleared in software by the Timer0 module Interrupt Service Routine before re-enabling this interrupt. The TMR0 interrupt cannot awaken the processor from SLEEP, since the timer is shut-off during SLEEP.

11.4 16-bit Mode Timer Reads and Writes

Timer0 can be set in 16-bit mode by clearing T0CON T08BIT. Registers TMR0H and TMR0L are used to access 16-bit timer value.

TMR0H is not the high byte of the timer/counter in 16-bit mode, but is actually a buffered version of the high byte of Timer0 (refer to Figure 11-1). The high byte of the Timer0 counter/timer is not directly readable nor writable. TMR0H is updated with the contents of the high byte of Timer0 during a read of TMR0L. This provides the ability to read all 16 bits of Timer0 without having to verify that the read of the high and low byte were valid, due to a rollover between successive reads of the high and low byte.

A write to the high byte of Timer0 must also take place through the TMR0H buffer register. Timer0 high byte is updated with the contents of buffered value of TMR0H, when a write occurs to TMR0L. This allows all 16 bits of Timer0 to be updated at once.

TABLE 11-1: REGISTERS ASSOCIATED WITH TIMER0

Name	Bit 7	Bit 6	Bit 5	Bit 4	Bit 3	Bit 2	Bit 1	Bit 0	Value on POR, BOR	Value on all other RESETS
TMR0L	Timer0 Module Low Byte Register								xxxx xxxx	uuuu uuuu
TMR0H	Timer0 Module High Byte Register								0000 0000	0000 0000
INTCON	GIE/GIEH	PEIE/GIEL	TMR0IE	INT0IE	RBIE	TMR0IF	INT0IF	RBIF	0000 000x	0000 000u
T0CON	TMR0ON	T08BIT	T0CS	T0SE	PSA	T0PS2	T0PS1	T0PS0	1111 1111	1111 1111
TRISA	—	PORTA Data Direction Register(1)							-111 1111	-111 1111

Legend: x = unknown, u = unchanged, - = unimplemented locations read as '0'. Shaded cells are not used by Timer0.

Note 1: Bit 6 of PORTA, LATA and TRISA are enabled in ECIO and RCIO Oscillator modes only. In all other Oscillator modes, they are disabled and read as ‘0’.

NOTES:

© 2003 Microchip Technology Inc.

12.0 TIMER1 MODULE

The Timer1 module timer/counter has the following features:

- 16-bit timer/counter
  (Two 8-bit registers: TMR1H and TMR1L)
- Readable and writable (both registers)
- Internal or external clock select
- Interrupt-on-overflow from FFFFh to 0000h
- RESET from CCP module special event trigger

Register 12-1 shows the Timer1 Control register. This register controls the Operating mode of the Timer1 module, as well as contains the Timer1 oscillator enable bit (T1OSCEN). Timer1 can be enabled/ disabled by setting/clearing control bit TMR1ON (T1CON register).

Figure 12-1 is a simplified block diagram of the Timer1 module.

Note:	Timer1 is disabled on POR.

REGISTER 12-1: T1CON REGISTER

R/W-0	U-0	R/W-0	R/W-0	R/W-0	R/W-0	R/W-0	R/W-0
RD16	—	T1CKPS1	T1CKPS0	T1OSCEN	$\overline{\text{T1SYNC}}$	TMR1CS	TMR1ON
bit 7							bit 0

bit 7 **RD16:** 16-bit Read/Write Mode Enable bit
1 = Enables register read/write of Timer1 in one 16-bit operation
0 = Enables register read/write of Timer1 in two 8-bit operations

bit 6 **Unimplemented:** Read as '0'

bit 5-4 **T1CKPS1:T1CKPS0**: Timer1 Input Clock Prescale Select bits
11 = 1:8 Prescale value
10 = 1:4 Prescale value
01 = 1:2 Prescale value
00 = 1:1 Prescale value

bit 3 **T1OSCEN:** Timer1 Oscillator Enable bit
1 = Timer1 oscillator is enabled
0 = Timer1 oscillator is shut-off
The oscillator inverter and feedback resistor are turned off to eliminate power drain.

bit 2 **$\overline{\text{T1SYNC}}$:** Timer1 External Clock Input Synchronization Select bit
When TMR1CS = 1:
1 = Do not synchronize external clock input
0 = Synchronize external clock input
When TMR1CS = 0:
This bit is ignored. Timer1 uses the internal clock when TMR1CS = 0.

bit 1 **TMR1CS:** Timer1 Clock Source Select bit
1 = External clock from pin RC0/T1OSO/T13CKI (on the rising edge)
0 = Internal clock (FOSC/4)

bit 0 **TMR1ON:** Timer1 On bit
1 = Enables Timer1
0 = Stops Timer1

Legend:			
R = Readable bit	W = Writable bit	U = Unimplemented bit, read as '0'	
- n = Value at POR	'1' = Bit is set	'0' = Bit is cleared	x = Bit is unknown

12.1 Timer1 Operation

Timer1 can operate in one of these modes:

- As a timer
- As a synchronous counter
- As an asynchronous counter

The Operating mode is determined by the clock select bit, TMR1CS (T1CON register).

When TMR1CS is clear, Timer1 increments every instruction cycle. When TMR1CS is set, Timer1 increments on every rising edge of the external clock input or the Timer1 oscillator, if enabled.

When the Timer1 oscillator is enabled (T1OSCEN is set), the RC1/T1OSI and RC0/T1OSO/T1CKI pins become inputs. That is, the TRISC<1:0> value is ignored.

Timer1 also has an internal “RESET input”. This RESET can be generated by the CCP module (Section 15.1).

FIGURE 12-1: TIMER1 BLOCK DIAGRAM

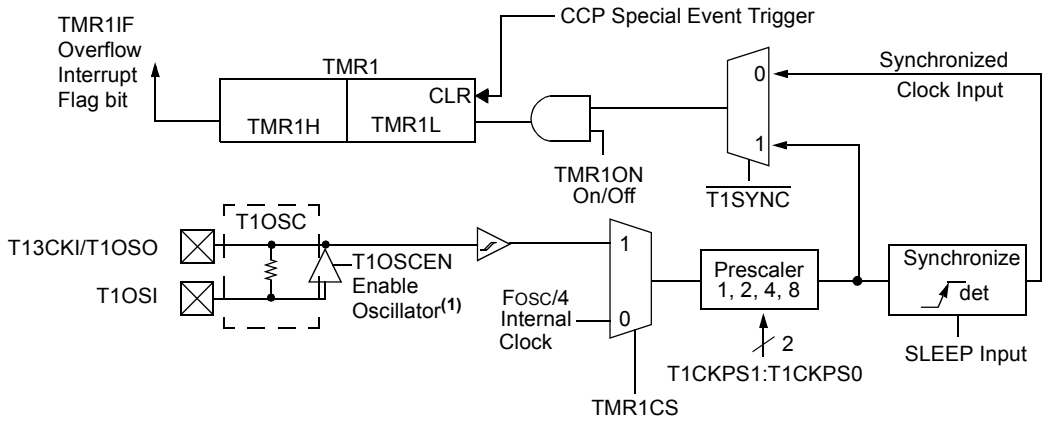

Note 1: When enable bit T1OSCEN is cleared, the inverter and feedback resistor are turned off. This reduces power drain.

FIGURE 12-2: TIMER1 BLOCK DIAGRAM: 16-BIT READ/WRITE MODE

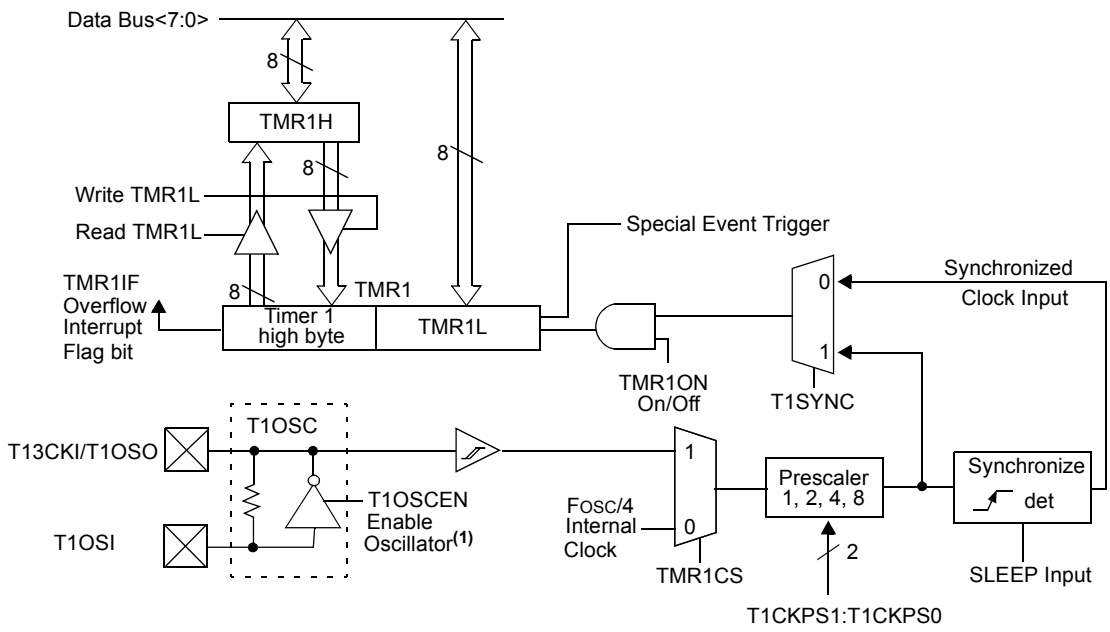

Note 1: When enable bit T1OSCEN is cleared, the inverter and feedback resistor are turned off. This reduces power drain.

© 2003 Microchip Technology Inc.

12.2 Timer1 Oscillator

A crystal oscillator circuit is built-in between pins T1OSI (input) and T1OSO (amplifier output). It is enabled by setting control bit T1OSCEN (T1CON register). The oscillator is a low power oscillator rated up to 200 kHz. It will continue to run during SLEEP. It is primarily intended for a 32 kHz crystal. Table 12-1 shows the capacitor selection for the Timer1 oscillator.

The user must provide a software time delay to ensure proper start-up of the Timer1 oscillator.

TABLE 12-1: CAPACITOR SELECTION FOR THE ALTERNATE OSCILLATOR

Osc Type	Freq	C1	C2
LP	32 kHz	TBD(1)	TBD(1)
Crystal to be Tested:			
32.768 kHz	Epson C-001R32.768K-A		± 20 PPM

Note 1: Microchip suggests 33 pF as a starting point in validating the oscillator circuit.

2: Higher capacitance increases the stability of the oscillator, but also increases the start-up time.

3: Since each resonator/crystal has its own characteristics, the user should consult the resonator/crystal manufacturer for appropriate values of external components.

4: Capacitor values are for design guidance only.

12.3 Timer1 Interrupt

The TMR1 register pair (TMR1H:TMR1L) increments from 0000h to FFFFh and rolls over to 0000h. The TMR1 Interrupt, if enabled, is generated on overflow, which is latched in interrupt flag bit TMR1IF (PIR registers). This interrupt can be enabled/disabled by setting/clearing TMR1 interrupt enable bit TMR1IE (PIE registers).

12.4 Resetting Timer1 Using a CCP Trigger Output

If the CCP module is configured in Compare mode to generate a “special event trigger" (CCP1M3:CCP1M0 = 1011), this signal will reset Timer1 and start an A/D conversion (if the A/D module is enabled).

Note: The special event triggers from the CCP1 module will not set interrupt flag bit TMR1IF (PIR registers).

Timer1 must be configured for either Timer or Synchronized Counter mode to take advantage of this feature. If Timer1 is running in Asynchronous Counter mode, this RESET operation may not work.

In the event that a write to Timer1 coincides with a special event trigger from CCP1, the write will take precedence.

In this mode of operation, the CCPR1H:CCPR1L registers pair, effectively becomes the period register for Timer1.

12.5 Timer1 16-bit Read/Write Mode

Timer1 can be configured for 16-bit reads and writes (see Figure 12-2). When the RD16 control bit (T1CON register) is set, the address for TMR1H is mapped to a buffer register for the high byte of Timer1. A read from TMR1L will load the contents of the high byte of Timer1 into the Timer1 high byte buffer. This provides the user with the ability to accurately read all 16 bits of Timer1, without having to determine whether a read of the high byte, followed by a read of the low byte is valid, due to a rollover between reads.

A write to the high byte of Timer1 must also take place through the TMR1H buffer register. Timer1 high byte is updated with the contents of TMR1H when a write occurs to TMR1L. This allows a user to write all 16 bits to both the high and low bytes of Timer1 at once.

The high byte of Timer1 is not directly readable or writable in this mode. All reads and writes must take place through the Timer1 high byte buffer register. Writes to TMR1H do not clear the Timer1 prescaler. The prescaler is only cleared on writes to TMR1L.

TABLE 12-2: REGISTERS ASSOCIATED WITH TIMER1 AS A TIMER/COUNTER

Name	Bit 7	Bit 6	Bit 5	Bit 4	Bit 3	Bit 2	Bit 1	Bit 0	Value on POR, BOR	Value on all other RESETS
INTCON	GIE/GIEH	PEIE/GIEL	TMR0IE	INT0IE	RBIE	TMR0IF	INT0IF	RBIF	0000 000x	0000 000u
PIR1	PSPIF	ADIF	RCIF	TXIF	SSPIF	CCP1IF	TMR2IF	TMR1IF	0000 0000	0000 0000
PIE1	PSPIE	ADIE	RCIE	TXIE	SSPIE	CCP1IE	TMR2IE	TMR1IE	0000 0000	0000 0000
IPR1	PSPIP	ADIP	RCIP	TXIP	SSPIP	CCP1IP	TMR2IP	TMR1IP	1111 1111	1111 1111
TMR1L	Holding Register for the Least Significant Byte of the 16-bit TMR1 Register								xxxx xxxx	uuuu uuuu
TMR1H	Holding Register for the Most Significant Byte of the 16-bit TMR1 Register								xxxx xxxx	uuuu uuuu
T1CON	RD16	—	T1CKPS1	T1CKPS0	T1OSCEN	$\overline{\text{T1SYNC}}$	TMR1CS	TMR1ON	0-00 0000	u-uu uuuu

Legend: x = unknown, u = unchanged, - = unimplemented, read as '0'. Shaded cells are not used by the Timer1 module.

© 2003 Microchip Technology Inc.

NOTES:

© 2003 Microchip Technology Inc.

13.0 TIMER2 MODULE

The Timer2 module timer has the following features:

- 8-bit timer (TMR2 register)
- 8-bit period register (PR2)
- Readable and writable (both registers)
- Software programmable prescaler (1:1, 1:4, 1:16)
- Software programmable postscaler (1:1 to 1:16)
- Interrupt on TMR2 match of PR2
- SSP module optional use of TMR2 output to generate clock shift

Register 13-1 shows the Timer2 Control register. Timer2 can be shut-off by clearing control bit TMR2ON (T2CON register) to minimize power consumption. Figure 13-1 is a simplified block diagram of the Timer2 module. The prescaler and postscaler selection of Timer2 are controlled by this register.

13.1 Timer2 Operation

Timer2 can be used as the PWM time-base for the PWM mode of the CCP module. The TMR2 register is readable and writable, and is cleared on any device RESET. The input clock (FOSC/4) has a prescale option of 1:1, 1:4, or 1:16, selected by control bits T2CKPS1:T2CKPS0 (T2CON register). The match output of TMR2 goes through a 4-bit postscaler (which gives a 1:1 to 1:16 scaling inclusive) to generate a TMR2 interrupt (latched in flag bit TMR2IF, PIR registers).

The prescaler and postscaler counters are cleared when any of the following occurs:

- A write to the TMR2 register
- A write to the T2CON register
- Any device RESET (Power-on Reset, $\overline{\text{MCLR}}$ Reset, Watchdog Timer Reset, or Brown-out Reset)

TMR2 is not cleared when T2CON is written.

Note:	Timer2 is disabled on POR.

REGISTER 13-1: T2CON REGISTER

U-0	R/W-0	R/W-0	R/W-0	R/W-0	R/W-0	R/W-0	R/W-0
—	TOUTPS3	TOUTPS2	TOUTPS1	TOUTPS0	TMR2ON	T2CKPS1	T2CKPS0
bit 7							bit 0

bit 7 **Unimplemented:** Read as '0'

bit 6-3 **TOUTPS3:TOUTPS0**: Timer2 Output Postscale Select bits

0000 = 1:1 Postscale
0001 = 1:2 Postscale
•
•
•
1111 = 1:16 Postscale

bit 2 **TMR2ON**: Timer2 On bit

1 = Timer2 is on
0 = Timer2 is off

bit 1-0 **T2CKPS1:T2CKPS0**: Timer2 Clock Prescale Select bits

00 = Prescaler is 1
01 = Prescaler is 4
1x = Prescaler is 16

Legend:			
R = Readable bit	W = Writable bit	U = Unimplemented bit, read as '0'	
- n = Value at POR	'1' = Bit is set	'0' = Bit is cleared	x = Bit is unknown

13.2 Timer2 Interrupt

The Timer2 module has an 8-bit period register, PR2. Timer2 increments from 00h until it matches PR2 and then resets to 00h on the next increment cycle. PR2 is a readable and writable register. The PR2 register is initialized to FFh upon RESET.

13.3 Output of TMR2

The output of TMR2 (before the postscaler) is a clock input to the Synchronous Serial Port module, which optionally uses it to generate the shift clock.

FIGURE 13-1: TIMER2 BLOCK DIAGRAM

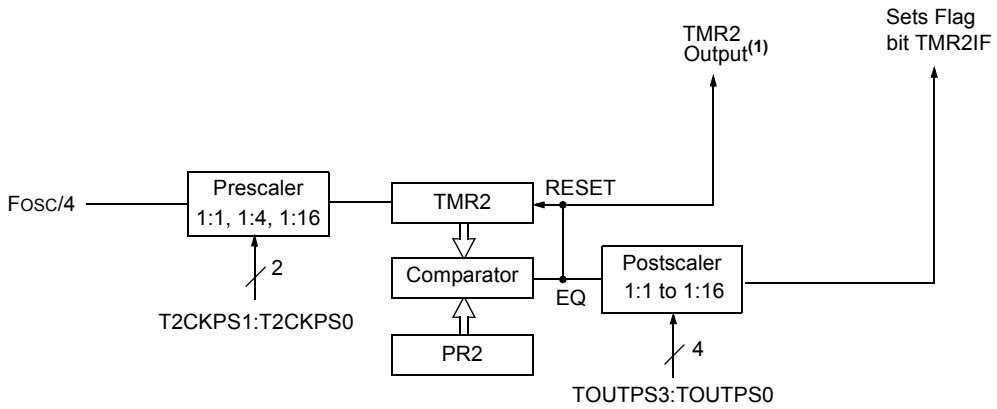

Note 1: TMR2 register output can be software selected by the SSP module as a baud clock.

TABLE 13-1: REGISTERS ASSOCIATED WITH TIMER2 AS A TIMER/COUNTER

Name	Bit 7	Bit 6	Bit 5	Bit 4	Bit 3	Bit 2	Bit 1	Bit 0	Value on POR, BOR	Value on all other RESETS
INTCON	GIE/GIEH	PEIE/GIEL	TMR0IE	INT0IE	RBIE	TMR0IF	INT0IF	RBIF	0000 000x	0000 000u
PIR1	PSPIF	ADIF	RCIF	TXIF	SSPIF	CCP1IF	TMR2IF	TMR1IF	0000 0000	0000 0000
PIE1	PSPIE	ADIE	RCIE	TXIE	SSPIE	CCP1IE	TMR2IE	TMR1IE	0000 0000	0000 0000
IPR1	PSPIP	ADIP	RCIP	TXIP	SSPIP	CCP1IP	TMR2IP	TMR1IP	1111 1111	1111 1111
TMR2	Timer2 Module Register								0000 0000	0000 0000
T2CON	—	TOUTPS3	TOUTPS2	TOUTPS1	TOUTPS0	TMR2ON	T2CKPS1	T2CKPS0	-000 0000	-000 0000
PR2	Timer2 Period Register								1111 1111	1111 1111

Legend: x = unknown, u = unchanged, - = unimplemented, read as '0'. Shaded cells are not used by the Timer2 module.

© 2003 Microchip Technology Inc.

14.0 TIMER3 MODULE

The Timer3 module timer/counter has the following features:

- 16-bit timer/counter
  (Two 8-bit registers: TMR3H and TMR3L)
- Readable and writable (both registers)
- Internal or external clock select
- Interrupt-on-overflow from FFFFh to 0000h
- RESET from CCP1/ECCP1 module trigger

Figure 14-1 is a simplified block diagram of the Timer3 module.

Register 14-1 shows the Timer3 Control register. This register controls the Operating mode of the Timer3 module and sets the CCP1 and ECCP1 clock source.

Register 12-1 shows the Timer1 Control register. This register controls the Operating mode of the Timer1 module, as well as contains the Timer1 oscillator enable bit (T1OSCEN), which can be a clock source for Timer3.

Note:	Timer3 is disabled on POR.

REGISTER 14-1: T3CON REGISTER

R/W-0	R/W-0	R/W-0	R/W-0	R/W-0	R/W-0	R/W-0	R/W-0
RD16	T3ECCP1	T3CKPS1	T3CKPS0	T3CCP1	$\overline{\text{T3SYNC}}$	TMR3CS	TMR3ON
bit 7							bit 0

bit 7 **RD16:** 16-bit Read/Write Mode Enable bit
1 = Enables register read/write of Timer3 in one 16-bit operation
0 = Enables register read/write of Timer3 in two 8-bit operations

bit 6,3 **T3ECCP1:T3CCP1:** Timer3 and Timer1 to CCP1/ECCP1 Enable bits
1x =Timer3 is the clock source for compare/capture CCP1 and ECCP1 modules
01 =Timer3 is the clock source for compare/capture of ECCP1,
Timer1 is the clock source for compare/capture of CCP1
00 = Timer1 is the clock source for compare/capture CCP1 and ECCP1 modules

bit 5-4 **T3CKPS1:T3CKPS0**: Timer3 Input Clock Prescale Select bits
11 = 1:8 Prescale value
10 = 1:4 Prescale value
01 = 1:2 Prescale value
00 = 1:1 Prescale value

bit 2 **$\overline{\text{T3SYNC}}$:** Timer3 External Clock Input Synchronization Control bit
(Not usable if the system clock comes from Timer1/Timer3)
When TMR3CS = 1:
1 = Do not synchronize external clock input
0 = Synchronize external clock input
When TMR3CS = 0:
This bit is ignored. Timer3 uses the internal clock when TMR3CS = 0.

bit 1 **TMR3CS:** Timer3 Clock Source Select bit
1 = External clock input from Timer1 oscillator or T1CKI (on the rising edge after the first falling edge)
0 = Internal clock (FOSC/4)

bit 0 **TMR3ON:** Timer3 On bit
1 = Enables Timer3
0 = Stops Timer3

Legend:			
R = Readable bit	W = Writable bit	U = Unimplemented bit, read as '0'	
- n = Value at POR	'1' = Bit is set	'0' = Bit is cleared	x = Bit is unknown

14.1 Timer3 Operation

Timer3 can operate in one of these modes:

- As a timer
- As a synchronous counter
- As an asynchronous counter

The Operating mode is determined by the clock select bit, TMR3CS (T3CON register).

When TMR3CS = 0, Timer3 increments every instruction cycle. When TMR3CS = 1, Timer3 increments on every rising edge of the Timer1 external clock input, or the Timer1 oscillator, if enabled.

When the Timer1 oscillator is enabled (T1OSCEN is set), the RC1/T1OSI and RC0/T1OSO/T1CKI pins become inputs. That is, the TRISC<1:0> value is ignored.

Timer3 also has an internal “RESET input”. This RESET can be generated by the CCP module (Section 15.1).

FIGURE 14-1: TIMER3 BLOCK DIAGRAM

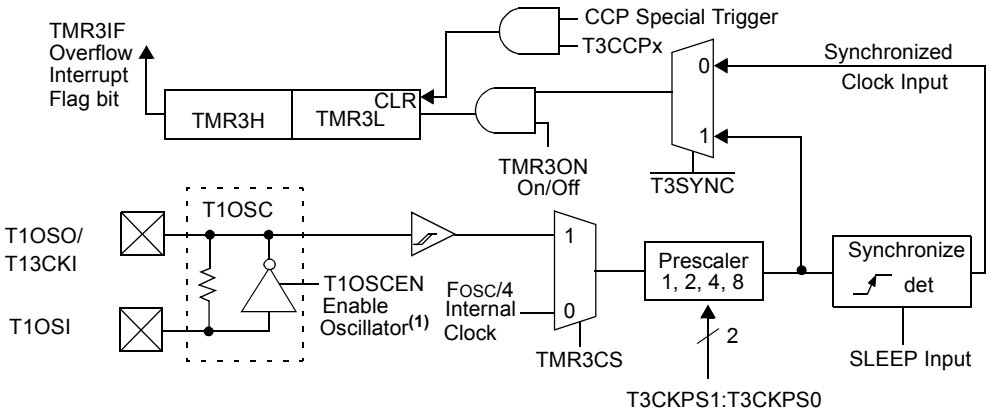

Note 1: When enable bit T1OSCEN is cleared, the inverter and feedback resistor are turned off. This eliminates power drain.

FIGURE 14-2: TIMER3 BLOCK DIAGRAM CONFIGURED IN 16-BIT READ/WRITE MODE

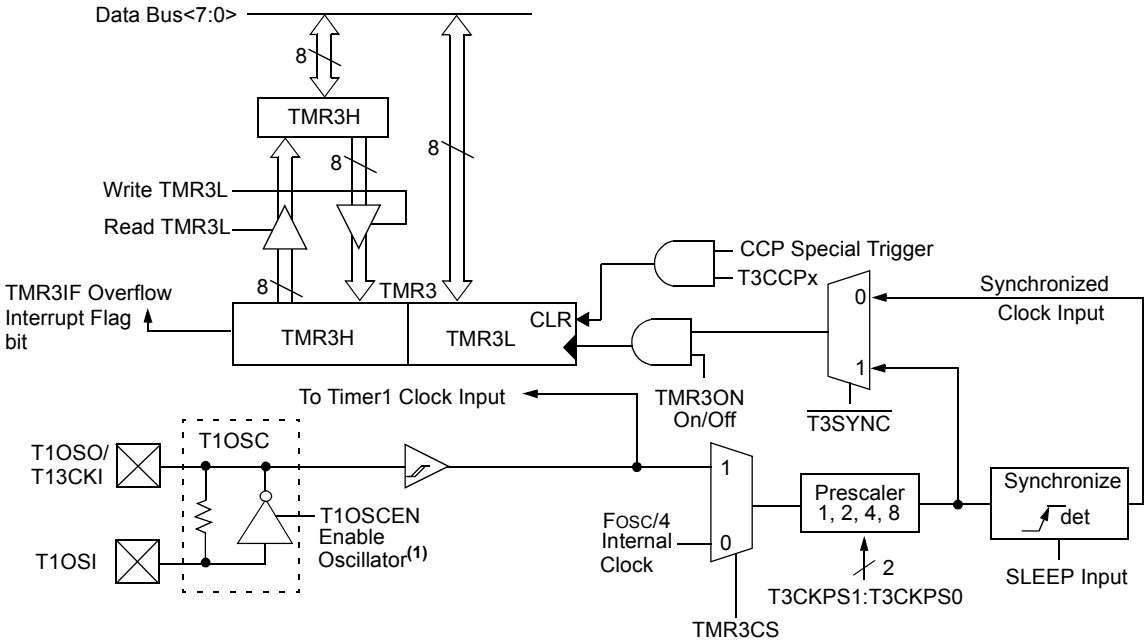

Note 1: When the T1OSCEN bit is cleared, the inverter and feedback resistor are turned off. This eliminates power drain.

© 2003 Microchip Technology Inc.

14.2 Timer1 Oscillator

The Timer1 oscillator may be used as the clock source for Timer3. The Timer1 oscillator is enabled by setting the T1OSCEN bit (T1CON register). The oscillator is a low power oscillator rated up to 200 kHz. Refer to Section 12.0, Timer1 Module for Timer1 oscillator details.

14.3 Timer3 Interrupt

The TMR3 register pair (TMR3H:TMR3L) increments from 0000h to 0FFFFh and rolls over to 0000h. The TMR3 interrupt, if enabled, is generated on overflow, which is latched in interrupt flag bit TMR3IF (PIR registers). This interrupt can be enabled/disabled by setting/clearing TMR3 interrupt enable bit TMR3IE (PIE registers).

14.4 Resetting Timer3 Using a CCP Trigger Output

If the CCP module is configured in Compare mode to generate a “special event trigger" (CCP1M3:CCP1M0 = 1011), this signal will reset Timer3.

Note:	The special event triggers from the CCP module will not set interrupt flag bit TMR3IF (PIR registers).

Timer3 must be configured for either Timer or Synchronized Counter mode to take advantage of this feature. If Timer3 is running in Asynchronous Counter mode, this RESET operation may not work. In the event that a write to Timer3 coincides with a special event trigger from CCP1, the write will take precedence. In this mode of operation, the CCPR1H:CCPR1L register pair becomes the period register for Timer3. Refer to Section 15.0, Capture/Compare/PWM (CCP) Modules for CCP details.

TABLE 14-1: REGISTERS ASSOCIATED WITH TIMER3 AS A TIMER/COUNTER

Name	Bit 7	Bit 6	Bit 5	Bit 4	Bit 3	Bit 2	Bit 1	Bit 0	Value on POR, BOR	Value on all other RESETS
INTCON	GIE/ GIEH	PEIE/GIEL	TMR0IE	INT0IE	RBIE	TMR0IF	INT0IF	RBIF	0000 000x	0000 000u
PIR2	—	CMIF	—	EEIF	BCLIF	LVDIF	TMR3IF	ECCP1IF	-0-0 0000	-0-0 0000
PIE2	—	CMIE	—	EEIE	BCLIE	LVDIE	TMR3IE	ECCP1IE	-0-0 0000	-0-0 0000
IPR2	—	CMIP	—	EEIP	BCLIP	LVDIP	TMR3IP	ECCP1IP	-1-1 1111	-1-1 1111
TMR3L	Holding Register for the Least Significant Byte of the 16-bit TMR3 Register								xxxx xxxx	uuuu uuuu
TMR3H	Holding Register for the Most Significant Byte of the 16-bit TMR3 Register								xxxx xxxx	uuuu uuuu
T1CON	RD16	—	T1CKPS1	T1CKPS0	T1OSCEN	$\overline{\text{T1SYNC}}$	TMR1CS	TMR1ON	0-00 0000	u-uu uuuu
T3CON	RD16	T3ECCP1	T3CKPS1	T3CKPS0	T3CCP1	$\overline{\text{T3SYNC}}$	TMR3CS	TMR3ON	0000 0000	uuuu uuuu

Legend: x = unknown, u = unchanged, - = unimplemented, read as '0'. Shaded cells are not used by the Timer1 module.

NOTES:

© 2003 Microchip Technology Inc.

15.0 CAPTURE/COMPARE/PWM (CCP) MODULES

The CCP (Capture/Compare/PWM) module contains a 16-bit register that can operate as a 16-bit capture register, as a 16-bit compare register, or as a PWM Duty Cycle register.

The operation of the CCP module is identical to that of the ECCP module (discussed in detail in Section 16.0), with two exceptions. The CCP module has a Capture special event trigger that can be used as a message received time-stamp for the CAN module (refer to Section 19.0, CAN Module for CAN operation), which the ECCP module does not. The ECCP module, on the other hand, has enhanced PWM functionality and auto shutdown capability. Aside from these, the operation of the module described in the this section is the same as the ECCP.

The control register for the CCP module is shown in Register 15-1. Table 15-2 (following page) details the interactions of the CCP and ECCP modules.

REGISTER 15-1: CCP1CON REGISTER

U-0	U-0	R/W-0	R/W-0	R/W-0	R/W-0	R/W-0	R/W-0
—	—	DC1B1	DC1B0	CCP1M3	CCP1M2	CCP1M1	CCP1M0
bit 7							bit 0

bit 7-6 **Unimplemented:** Read as '0'

bit 5-4 **DCxB1:DCxB0**: PWM Duty Cycle bit 1 and bit 0
Capture mode:
Unused
Compare mode:
Unused
PWM mode:
These bits are the two LSbs (bit 1 and bit 0) of the 10-bit PWM duty cycle. The upper eight bits (DCx9:DCx2) of the duty cycle are found in CCPRxL.

bit 3-0 **CCPxM3:CCPxM0**: CCPx Mode Select bits
0000 = Capture/Compare/PWM off (resets CCPx module)
0001 = Reserved
0010 = Compare mode, toggle output on match (CCPxIF bit is set)
0011 = Capture mode, CAN message received (CCP1 only)
0100 = Capture mode, every falling edge
0101 = Capture mode, every rising edge
0110 = Capture mode, every 4th rising edge
0111 = Capture mode, every 16th rising edge
1000 = Compare mode, initialize CCP pin Low, on compare match force CCP pin High (CCPIF bit is set)
1001 = Compare mode, initialize CCP pin High, on compare match force CCP pin Low (CCPIF bit is set)
1010 = Compare mode, CCP pin is unaffected (CCPIF bit is set)
1011 = Compare mode, trigger special event (CCP1IF bit is set; CCP resets TMR1 or TMR3 and starts an A/D conversion, if the A/D module is enabled)
11xx = PWM mode

Legend:			
R = Readable bit	W = Writable bit	U = Unimplemented bit, read as '0'	
- n = Value at POR	'1' = Bit is set	'0' = Bit is cleared	x = Bit is unknown

15.1 CCP1 Module

Capture/Compare/PWM Register1 (CCPR1) is comprised of two 8-bit registers: CCPR1L (low byte) and CCPR1H (high byte). The CCP1CON register controls the operation of CCP1. All are readable and writable.

Table 15-1 shows the timer resources of the CCP module modes.

TABLE 15-1: CCP1 MODE - TIMER RESOURCE

CCP1 Mode	Timer Resource
Capture	Timer1 or Timer3
Compare	Timer1 or Timer3
PWM	Timer2

15.2 Capture Mode

In Capture mode, CCPR1H:CCPR1L captures the 16-bit value of the TMR1 or TMR3 register when an event occurs on pin RC2/CCP1. An event is defined as:

- every falling edge
- every rising edge
- every 4th rising edge
- every 16th rising edge

An event is selected by control bits CCP1M3:CCP1M0 (CCP1CON<3:0>). When a capture is made, the interrupt request flag bit CCP1IF (PIR registers) is set. It must be cleared in software. If another capture occurs before the value in register CCPR1 is read, the old captured value will be lost.

15.2.1 CCP PIN CONFIGURATION

In Capture mode, the RC2/CCP1 pin should be configured as an input by setting the TRISC<2> bit.

Note:	If the RC2/CCP1 is configured as an output, a write to the port can cause a capture condition.

15.2.2 TIMER1/TIMER3 MODE SELECTION

The timers used with the capture feature (either Timer1 and/or Timer3) must be running in Timer mode or Synchronized Counter mode. In Asynchronous Counter mode, the capture operation may not work. The timer used with each CCP module is selected in the T3CON register.

TABLE 15-2: INTERACTION OF CCP1 AND ECCP1 MODULES

CCP1 Mode	ECCP1 Mode	Interaction
Capture	Capture	TMR1 or TMR3 time-base. Time-base can be different for each CCP.
Capture	Compare	The compare could be configured for the special event trigger, which clears either TMR1 or TMR3, depending upon which time-base is used.
Compare	Compare	The compare(s) could be configured for the special event trigger, which clears TMR1 or TMR3, depending upon which time-base is used.
PWM	PWM	The PWMs will have the same frequency and update rate (TMR2 interrupt).
PWM	Capture	None.
PWM	Compare	None.

© 2003 Microchip Technology Inc.

15.2.3 SOFTWARE INTERRUPT

When the Capture mode is changed, a false capture interrupt may be generated. The user should keep bit CCP1IE (PIE registers) clear to avoid false interrupts and should clear the flag bit CCP1IF, following any such change in Operating mode.

15.2.4 CCP1 PRESCALER

There are four prescaler settings, specified by bits CCP1M3:CCP1M0. Whenever the CCP1 module is turned off, or the CCP1 module is not in Capture mode, the prescaler counter is cleared. This means that any RESET will clear the prescaler counter.

Switching from one capture prescaler to another may generate an interrupt. Also, the prescaler counter will not be cleared; therefore, the first capture may be from a non-zero prescaler. Example 15-1 shows the recommended method for switching between capture prescalers. This example also clears the prescaler counter and will not generate the “false” interrupt.

15.2.5 CAN MESSAGE TIME-STAMP

The CAN capture event occurs when a message is received in either of the receive buffers. The CAN module provides a rising edge to the CCP1 module to cause a capture event. This feature is provided to time-stamp the received CAN messages.

This feature is enabled by setting the CANCAP bit of the CAN I/O control register (CIOCON<4>). The message receive signal from the CAN module then takes the place of the events on RC2/CCP1.

EXAMPLE 15-1: CHANGING BETWEEN CAPTURE PRESCALERS

```
CLRF    CCP1CON, F      ; Turn CCP module off
MOVLW   NEW_CAPT_PS     ; Load WREG with the
                        ; new prescaler mode
                        ; value and CCP ON
MOVWF   CCP1CON         ; Load CCP1CON with
                        ; this value
```

FIGURE 15-1: CAPTURE MODE OPERATION BLOCK DIAGRAM

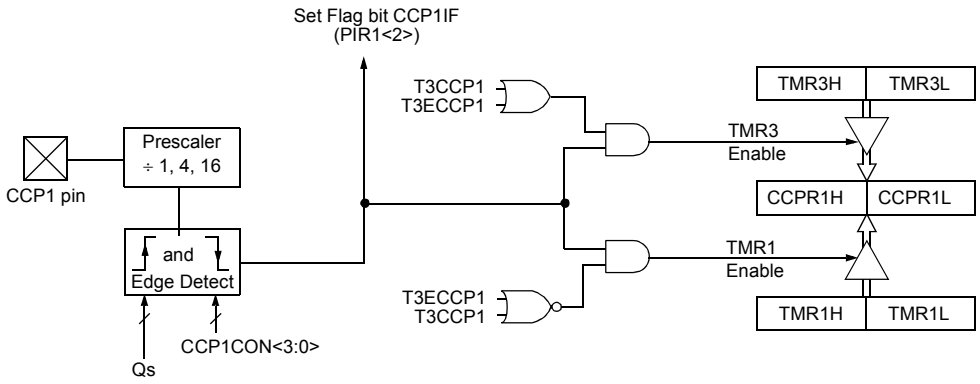

Note: I/O pins have diode protection to VDD and VSS.

15.3 Compare Mode

In Compare mode, the 16-bit CCPR1 and ECCPR1 register value is constantly compared against either the TMR1 register pair value, or the TMR3 register pair value. When a match occurs, the CCP1 pin can have one of the following actions:

- Driven high
- Driven low
- Toggle output (high to low or low to high)
- Remains unchanged

The action on the pin is based on the value of control bits CCP1M3:CCP1M0. At the same time, interrupt flag bit CCP1IF is set.

15.3.1 CCP1 PIN CONFIGURATION

The user must configure the CCP1 pin as an output by clearing the appropriate TRISC bit.

Note:	Clearing the CCP1CON register will force the CCP1 compare output latch to the default low level. This is not the data latch.

15.3.2 TIMER1/TIMER3 MODE SELECTION

Timer1 and/or Timer3 must be running in Timer mode, or Synchronized Counter mode, if the CCP module is using the compare feature. In Asynchronous Counter mode, the compare operation may not work.

15.3.3 SOFTWARE INTERRUPT MODE

When Generate Software Interrupt is chosen, the CCP1 pin is not affected. Only a CCP interrupt is generated (if enabled).

15.3.4 SPECIAL EVENT TRIGGER

In this mode, an internal hardware trigger is generated, which may be used to initiate an action.

The special event trigger output of CCP1 resets either the TMR1 or TMR3 register pair. Additionally, the ECCP1 Special Event Trigger will start an A/D conversion, if the A/D module is enabled.

Note:	The Special Event Trigger from the ECCP1 module will not set the Timer1 or Timer3 interrupt flag bits.

FIGURE 15-2: COMPARE MODE OPERATION BLOCK DIAGRAM

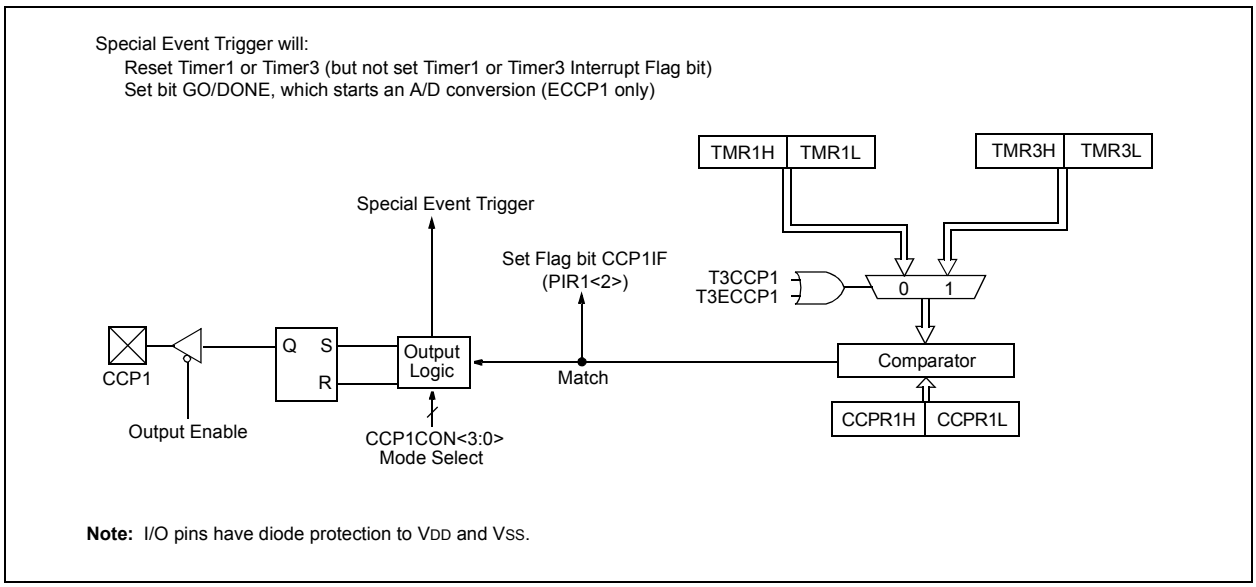

Note: I/O pins have diode protection to VDD and VSS.

© 2003 Microchip Technology Inc.

TABLE 15-3: REGISTERS ASSOCIATED WITH CAPTURE, COMPARE, TIMER1 AND TIMER3

Name	Bit 7	Bit 6	Bit 5	Bit 4	Bit 3	Bit 2	Bit 1	Bit 0	Value on POR, BOR	Value on all other RESETS
INTCON	GIE/ GIEH	PEIE/ GIEL	TMR0IE	INT0IE	RBIE	TMR0IF	INT0IF	RBIF	0000 000x	0000 000u
PIR1	PSPIF	ADIF	RCIF	TXIF	SSPIF	CCP1IF	TMR2IF	TMR1IF	0000 0000	0000 0000
PIE1	PSPIE	ADIE	RCIE	TXIE	SSPIE	CCP1IE	TMR2IE	TMR1IE	0000 0000	0000 0000
IPR1	PSPIP	ADIP	RCIP	TXIP	SSPIP	CCP1IP	TMR2IP	TMR1IP	1111 1111	1111 1111
TRISD	PORTD Data Direction Register								1111 1111	1111 1111
TMR1L	Holding Register for the Least Significant Byte of the 16-bit TMR1 Register								xxxx xxxx	uuuu uuuu
TMR1H	Holding Register for the Most Significant Byte of the 16-bit TMR1 Register								xxxx xxxx	uuuu uuuu
T1CON	RD16	—	T1CKPS1	T1CKPS0	T1OSCEN	$\overline{\text{T1SYNC}}$	TMR1CS	TMR1ON	0-00 0000	u-uu uuuu
CCPR1L	Capture/Compare/PWM Register1 (LSB)								xxxx xxxx	uuuu uuuu
CCPR1H	Capture/Compare/PWM Register1 (MSB)								xxxx xxxx	uuuu uuuu
CCP1CON	—	—	DC1B1	DC1B0	CCP1M3	CCP1M2	CCP1M1	CCP1M0	--00 0000	--00 0000
PIR2	—	CMIF	—	EEIF	BCLIF	LVDIF	TMR3IF	ECCP1IF	-0-0 0000	-0-0 0000
PIE2	—	CMIE	—	EEIE	BCLIE	LVDIE	TMR3IE	ECCP1IE	-0-0 0000	-0-0 0000
IPR2	—	CMIP	—	EEIP	BCLIP	LVDIP	TMR3IP	ECCP1IP	-1-1 1111	-1-1 1111
TMR3L	Holding Register for the Least Significant Byte of the 16-bit TMR3 Register								xxxx xxxx	uuuu uuuu
TMR3H	Holding Register for the Most Significant Byte of the 16-bit TMR3 Register								xxxx xxxx	uuuu uuuu
T3CON	RD16	T3ECCP1	T3CKPS1	T3CKPS0	T3CCP1	$\overline{\text{T3SYNC}}$	TMR3CS	TMR3ON	0000 0000	uuuu uuuu

Legend: x = unknown, u = unchanged, - = unimplemented, read as '0'. Shaded cells are not used by Capture and Timer1.

15.4 PWM Mode

In Pulse Width Modulation (PWM) mode, the CCP1 pin produces up to a 10-bit resolution PWM output. Since the CCP1 pin is multiplexed with the PORTC data latch, the TRISC<2> bit must be cleared to make the CCP1 pin an output.

Note:	Clearing the CCP1CON register will force the CCP1 PWM output latch to the default low level. This is not the PORTC I/O data latch.

Figure 15-3 shows a simplified block diagram of the CCP module in PWM mode.

For a step-by-step procedure on how to set up the CCP module for PWM operation, see Section 15.4.3.

FIGURE 15-3: SIMPLIFIED PWM BLOCK DIAGRAM

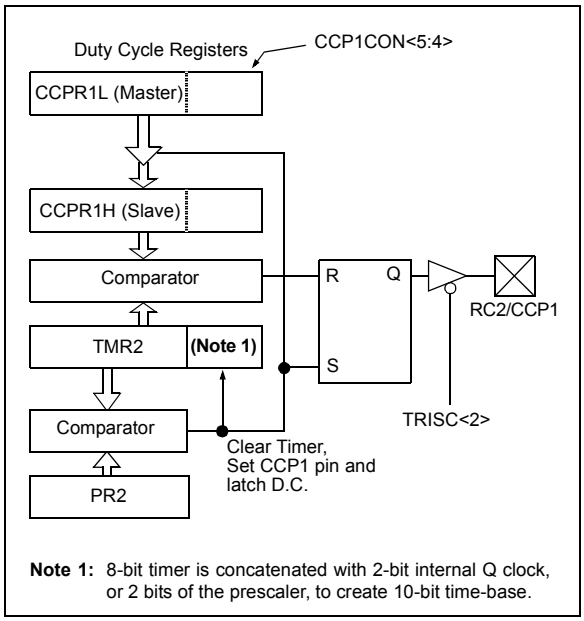

Note 1: 8-bit timer is concatenated with 2-bit internal Q clock, or 2 bits of the prescaler, to create 10-bit time-base.

A PWM output (Figure 15-4) has a time-base (period) and a time that the output stays high (duty cycle). The frequency of the PWM is the inverse of the period (1/period).

FIGURE 15-4: PWM OUTPUT

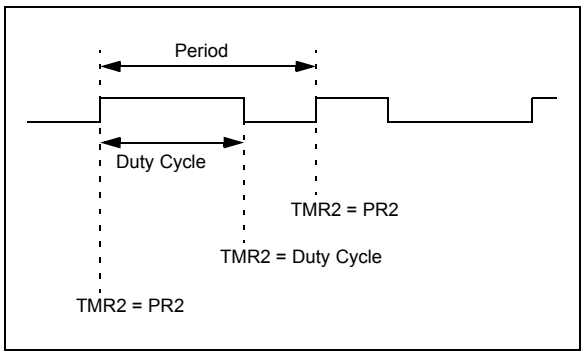

15.4.1 PWM PERIOD

The PWM period is specified by writing to the PR2 register. The PWM period can be calculated using the following formula.

EQUATION 15-1:

$$\text{PWM period} = [(PR2) + 1] \cdot 4 \cdot T_{OSC} \cdot (\text{TMR2 prescale value})$$

PWM frequency is defined as 1 / [PWM period].

When TMR2 is equal to PR2, the following three events occur on the next increment cycle:

- TMR2 is cleared
- The CCP1 pin is set (exception: if PWM duty cycle = 0%, the CCP1 pin will not be set)
- The PWM duty cycle is latched from CCPR1L into CCPR1H

Note:	The Timer2 postscaler (see Section 13.0) is not used in the determination of the PWM frequency. The postscaler could be used to have a servo update rate at a different frequency than the PWM output.

15.4.2 PWM DUTY CYCLE

The PWM duty cycle is specified by writing to the CCPR1L register and to the CCP1CON<5:4> bits. Up to 10-bit resolution is available. The CCPR1L contains the eight MSbs and the CCP1CON<5:4> contains the two LSbs. This 10-bit value is represented by CCPR1L:CCP1CON<5:4>. The following equation is used to calculate the PWM duty cycle in time.

EQUATION 15-2:

$$\text{PWM duty cycle} = (\text{CCPR1L:CCP1CON<5:4>}) \cdot T_{OSC} \cdot (\text{TMR2 prescale value})$$

CCPR1L and CCP1CON<5:4> can be written to at any time, but the duty cycle value is not latched into CCPR1H until after a match between PR2 and TMR2 occurs (i.e., the period is complete). In PWM mode, CCPR1H is a read only register.

The CCPR1H register and a 2-bit internal latch are used to double-buffer the PWM duty cycle. This double-buffering is essential for glitchless PWM operation.

When the CCPR1H and 2-bit latch match TMR2, concatenated with an internal 2-bit Q clock, or 2 bits of the TMR2 prescaler, the CCP1 pin is cleared.

© 2003 Microchip Technology Inc.

The maximum PWM resolution (bits) for a given PWM frequency is given by the following equation.

EQUATION 15-3:

$$\text{PWM Resolution (max)} = \frac{\log\left(\frac{FOSC}{FPWM}\right)}{\log(2)} \text{bits}$$

Note: If the PWM duty cycle value is longer than the PWM period, the CCP1 pin will not be cleared.

15.4.3 SETUP FOR PWM OPERATION

The following steps should be taken when configuring the CCP module for PWM operation:

1. Set the PWM period by writing to the PR2 register.
2. Set the PWM duty cycle by writing to the CCPR1L register and CCP1CON<5:4> bits.
3. Make the CCP1 pin an output by clearing the TRISC<2> bit.
4. Set the TMR2 prescale value and enable Timer2 by writing to T2CON.
5. Configure the CCP1 module for PWM operation.

TABLE 15-4: EXAMPLE PWM FREQUENCIES AND RESOLUTIONS AT 40 MHz

PWM Frequency	2.44 kHz	9.76 kHz	39.06 kHz	156.3 kHz	312.5 kHz	416.6 kHz
Timer Prescaler (1, 4, 16)	16	4	1	1	1	1
PR2 Value	0FFh	0FFh	0FFh	3Fh	1Fh	17h
Maximum Resolution (bits)	10	10	10	8	7	5.5

TABLE 15-5: REGISTERS ASSOCIATED WITH PWM AND TIMER2

Name	Bit 7	Bit 6	Bit 5	Bit 4	Bit 3	Bit 2	Bit 1	Bit 0	Value on POR, BOR	Value on all other RESETS
INTCON	GIE/ GIEH	PEIE/ GIEL	TMR0IE	INT0IE	RBIE	TMR0IF	INT0IF	RBIF	0000 000x	0000 000u
PIR1	PSPIF	ADIF	RCIF	TXIF	SSPIF	CCP1IF	TMR2IF	TMR1IF	0000 0000	0000 0000
PIE1	PSPIE	ADIE	RCIE	TXIE	SSPIE	CCP1IE	TMR2IE	TMR1IE	0000 0000	0000 0000
IPR1	PSPIP	ADIP	RCIP	TXIP	SSPIP	CCP1IP	TMR2IP	TMR1IP	1111 1111	1111 1111
TRISD	PORTD Data Direction Register								1111 1111	1111 1111
TMR2	Timer2 Module Register								0000 0000	0000 0000
PR2	Timer2 Module Period Register								1111 1111	1111 1111
T2CON	—	TOUTPS3	TOUTPS2	TOUTPS1	TOUTPS0	TMR2ON	T2CKPS1	T2CKPS0	-000 0000	-000 0000
CCPR1L	Capture/Compare/PWM Register1 (LSB)								xxxx xxxx	uuuu uuuu
CCPR1H	Capture/Compare/PWM Register1 (MSB)								xxxx xxxx	uuuu uuuu
CCP1CON	—	—	DC1B1	DC1B0	CCP1M3	CCP1M2	CCP1M1	CCP1M0	--00 0000	--00 0000

Legend: x = unknown, u = unchanged, - = unimplemented, read as '0'. Shaded cells are not used by PWM and Timer2.

NOTES:

© 2003 Microchip Technology Inc.

16.0 ENHANCED CAPTURE/ COMPARE/PWM (ECCP) MODULE

Note:	The ECCP (Enhanced Capture/Compare/ PWM) module is only available on PIC18F448 and PIC18F458 devices.

This module contains a 16-bit register which can operate as a 16-bit Capture register, a 16-bit Compare register, or a PWM Master/Slave Duty Cycle register.

The operation of the ECCP module differs from the CCP (discussed in detail in Section 15.0) with the addition of an enhanced PWM module, which allows for up to 4 output channels and user selectable polarity. These features are discussed in detail in Section 16.5. The module can also be programmed for automatic shutdown in response to various analog or digital events.

The control register for ECCP1 is shown in Register 16-1.

REGISTER 16-1: ECCP1CON REGISTER

R/W-0	R/W-0	R/W-0	R/W-0	R/W-0	R/W-0	R/W-0	R/W-0
EPWM1M1	EPWM1M0	EDC1B1	EDC1B0	ECCP1M3	ECCP1M2	ECCP1M1	ECCP1M0
bit 7							bit 0

bit 7-6 **EPWM1M<1:0>:** PWM Output Configuration bits

If ECCP1M<3:2> = 00, 01, 10:
xx = P1A assigned as Capture/Compare input; P1B, P1C, P1D assigned as port pins

If ECCP1M<3:2> = 11:
00 = Single output; P1A modulated; P1B, P1C, P1D assigned as port pins
01 = Full-bridge output forward; P1D modulated; P1A active; P1B, P1C inactive
10 = Half-bridge output; P1A, P1B modulated with deadband control; P1C, P1D assigned as port pins
11 = Full-bridge output reverse; P1B modulated; P1C active; P1A, P1D inactive

bit 5-4 **EDC1B<1:0>:** PWM Duty Cycle Least Significant bits

Capture mode:
Unused

Compare mode:
Unused

PWM mode:
These bits are the two LSbs of the PWM duty cycle. The eight MSbs are found in ECCPR1L.

bit 3-0 **ECCP1M<3:0>:** ECCP1 Mode Select bits

0000 = Capture/Compare/PWM off (resets ECCP module)
0001 = Unused (reserved)
0010 = Compare mode, toggle output on match (ECCP1IF bit is set)
0011 = Unused (reserved)
0100 = Capture mode, every falling edge
0101 = Capture mode, every rising edge
0110 = Capture mode, every 4th rising edge
0111 = Capture mode, every 16th rising edge
1000 = Compare mode, set output on match (ECCP1IF bit is set)
1001 = Compare mode, clear output on match (ECCP1IF bit is set)
1010 = Compare mode, ECCP1 pin is unaffected (ECCP1IF bit is set)
1011 = Compare mode, trigger special event (ECCP1IF bit is set; ECCP resets TMR1or TMR3, and starts an A/D conversion, if the A/D module is enabled)
1100 = PWM mode; P1A, P1C active high; P1B, P1D active high
1101 = PWM mode; P1A, P1C active high; P1B, P1D active low
1110 = PWM mode; P1A, P1C active low; P1B, P1D active high
1111 = PWM mode; P1A, P1C active low; P1B, P1D active low

Legend:			
R = Readable bit	W = Writable bit	U = Unimplemented bit, read as '0'	
- n = Value at POR	'1' = Bit is set	'0' = Bit is cleared	x = Bit is unknown

16.1 ECCP1 Module

Enhanced Capture/Compare/PWM Register1 (ECCPR1) is comprised of two 8-bit registers: ECCPR1L (low byte) and ECCPR1H (high byte). The ECCP1CON register controls the operation of ECCP1; the additional registers, ECCPAS and ECCP1DEL, control enhanced PWM specific features. All registers are readable and writable.

Table 16-1 shows the timer resources for the ECCP module modes. Table 16-2 describes the interactions of the ECCP module with the standard CCP module.

In PWM mode, the ECCP module can have up to four available outputs, depending on which Operating mode is selected. These outputs are multiplexed with PORTD and the Parallel Slave Port. Both the Operating mode and the output pin assignments are configured by setting PWM Output Configuration bits, EPWM1M1:EPWM1M0 (ECCP1CON<7:6>). The specific pin assignments for the various Output modes are shown in Table 16-3.

TABLE 16-1: ECCP1 MODE - TIMER RESOURCE

ECCP1 Mode	Timer Resource
Capture	Timer1 or Timer3
Compare	Timer1 or Timer3
PWM	Timer2

TABLE 16-2: INTERACTION OF CCP1 AND ECCP1 MODULES

ECCP1 Mode	CCP1 Mode	Interaction
Capture	Capture	TMR1 or TMR3 time-base. Time-base can be different for each CCP.
Capture	Compare	The compare could be configured for the special event trigger, which clears either TMR1 or TMR3, depending upon which time-base is used.
Compare	Compare	The compare(s) could be configured for the special event trigger, which clears TMR1 or TMR3, depending upon which time-base is used.
PWM	PWM	The PWMs will have the same frequency and update rate (TMR2 interrupt).
PWM	Capture	None
PWM	Compare	None

TABLE 16-3: PIN ASSIGNMENTS FOR VARIOUS ECCP MODES

ECCP Mode(1)	ECCP1CON Configuration	RD4	RD5	RD6	RD7
Conventional CCP Compatible	00xx11xx	ECCP1	RD<5>, PSP<5>	RD<6>, PSP<6>	RD<7>, PSP<7>
Dual Output PWM(2)	10xx11xx	P1A	P1B	RD<6>, PSP<6>	RD<7>, PSP<7>
Quad Output PWM(2)	x1xx11xx	P1A	P1B	P1C	P1D

Legend: x = Don't care. Shaded cells indicate pin assignments not used by ECCP in a given mode.

Note 1: In all cases, the appropriate TRISD bits must be cleared to make the corresponding pin an output.

2: In these modes, the PSP I/O control for PORTD is overridden by P1B, P1C and P1D.

© 2003 Microchip Technology Inc.

16.2 Capture Mode

The Capture mode of the ECCP module is virtually identical in operation to that of the standard CCP module, as discussed in Section 15.1. The differences are in the registers and port pins involved:

- The 16-bit Capture register is ECCPR1 (ECCPR1H and ECCPR1L);
- The capture event is selected by control bits ECCP1M3:ECCP1M0 (ECCP1CON<3:0>);
- The interrupt bits are ECCP1IE (PIE2<0>) and ECCP1IF (PIR2<0>); and
- The capture input pin is RD4, and its corresponding direction control bit is TRISD<4>.

Other operational details, including timer selection, output pin configuration and software interrupts, are exactly the same as the standard CCP module.

16.2.1 CAN MESSAGE TIME-STAMP

The special capture event for the reception of CAN messages (Section 15.2.5) is not available with the ECCP module.

16.3 Compare Mode

The Compare mode of the ECCP module is virtually identical in operation to that of the standard CCP module, as discussed in Section 15.2. The differences are in the registers and port pins, as described in Section 16.2. All other details are exactly the same.

16.3.1 SPECIAL EVENT TRIGGER

Except as noted below, the special event trigger output of ECCP1 functions identically to that of the standard CCP module. It may be used to start an A/D conversion if the A/D module is enabled.

Note:	The special Event trigger from the ECCP1 module will not set the Timer1 or Timer3 interrupt flag bits.

TABLE 16-4: REGISTERS ASSOCIATED WITH ENHANCED CAPTURE, COMPARE, TIMER1 AND TIMER3

Name	Bit 7	Bit 6	Bit 5	Bit 4	Bit 3	Bit 2	Bit 1	Bit 0	Value on POR, BOR	Value on all other RESETS
INTCON	GIE/GIEH	PEIE/GIEL	TMR0IE	INT0IE	RBIE	TMR0IF	INT0IF	RBIF	0000 000x	0000 000u
PIR2	—	CMIF	—	EEIF	BCLIF	LVDIF	TMR3IF	ECCP1IF	-0-0 0000	-0-0 0000
PIE2	—	CMIE	—	EEIE	BCLIE	LVDIE	TMR3IE	ECCP1IE	-0-0 0000	-0-0 0000
IPR2	—	CMIP	—	EEIP	BCLIP	LVDIP	TMR3IP	ECCP1IP	-1-1 1111	-1-1 1111
TMR1L	Holding Register for the Least Significant Byte of the 16-bit TMR1 Register								xxxx xxxx	uuuu uuuu
TMR1H	Holding Register for the Most Significant Byte of the 16-bit TMR1 Register								xxxx xxxx	uuuu uuuu
T1CON	RD16	—	T1CKPS1	T1CKPS0	T1OSCEN	$\overline{\text{T1SYNC}}$	TMR1CS	TMR1ON	0-00 0000	u-uu uuuu
TMR3L	Holding Register for the Least Significant Byte of the 16-bit TMR3 Register								xxxx xxxx	uuuu uuuu
TMR3H	Holding Register for the Most Significant Byte of the 16-bit TMR3 Register								xxxx xxxx	uuuu uuuu
T3CON	RD16	T3ECCP1	T3CKPS1	T3CKPS0	T3CCP1	$\overline{\text{T3SYNC}}$	TMR3CS	TMR3ON	0000 0000	uuuu uuuu
TRISD	PORTD Data Direction Register								1111 1111	1111 1111
ECCPR1L	Capture/Compare/PWM Register1 (LSB)								xxxx xxxx	uuuu uuuu
ECCPR1H	Capture/Compare/PWM Register1 (MSB)								xxxx xxxx	uuuu uuuu
ECCP1CON	EPWM1M1	EPWM1M0	EDC1B1	EDC1B0	ECCP1M3	ECCP1M2	ECCP1M1	ECCP1M0	0000 0000	0000 0000

Legend: x = unknown, u = unchanged, - = unimplemented, read as '0'. Shaded cells are not used by the ECCP module and Timer1.

16.4 Standard PWM Mode

When configured in Single Output mode, the ECCP module functions identically to the standard CCP module in PWM mode, as described in Section 15.4. The differences in registers and ports are as described in Section 16.2; in addition, the two Least Significant bits of the 10-bit PWM duty cycle value are represented by ECCP1CON<5:4>.

Note:	When setting up single output PWM operations, users are free to use either of the processes described in Section 15.4.3 or Section 16.5.8. The latter is more generic, but will work for either single or multi-output PWM.

16.5 Enhanced PWM Mode

The Enhanced PWM mode provides additional PWM output options for a broader range of control applications. The module is an upwardly compatible version of the standard CCP module and is modified to provide up to four outputs, designated P1A through P1D. Users are also able to select the polarity of the signal (either active high or active low). The module's Output mode and polarity are configured by setting the EPWM1M1:EPWM1M0 and ECCP1M3:ECCP1M0 bits of the ECCP1CON register (ECCP1CON<7:6> and ECCP1CON<3:0>, respectively).

Figure 16-1 shows a simplified block diagram of PWM operation. All control registers are double-buffered and are loaded at the beginning of a new PWM cycle (the period boundary when the assigned timer resets), in order to prevent glitches on any of the outputs. The exception is the PWM delay register ECCP1DEL, which is loaded at either the duty cycle boundary or the boundary period (whichever comes first). Because of the buffering, the module waits until the assigned timer resets, instead of starting immediately. This means that enhanced PWM waveforms do not exactly match the standard PWM waveforms, but are instead offset by one full instruction cycle (4 TOSC).

As before, the user must manually configure the appropriate TRISD bits for output.

16.5.1 PWM OUTPUT CONFIGURATIONS

The EPWM1M<1:0> bits in the ECCP1CON register allow one of four configurations:

- Single Output
- Half-Bridge Output
- Full-Bridge Output, Forward mode
- Full-Bridge Output, Reverse mode

The Single Output mode is the Standard PWM mode discussed in Section 15.4. The Half-Bridge and Full-Bridge Output modes are covered in detail in the sections that follow.

The general relationship of the outputs in all configurations is summarized in Figure 16-2.

FIGURE 16-1: SIMPLIFIED BLOCK DIAGRAM OF THE ENHANCED PWM MODULE

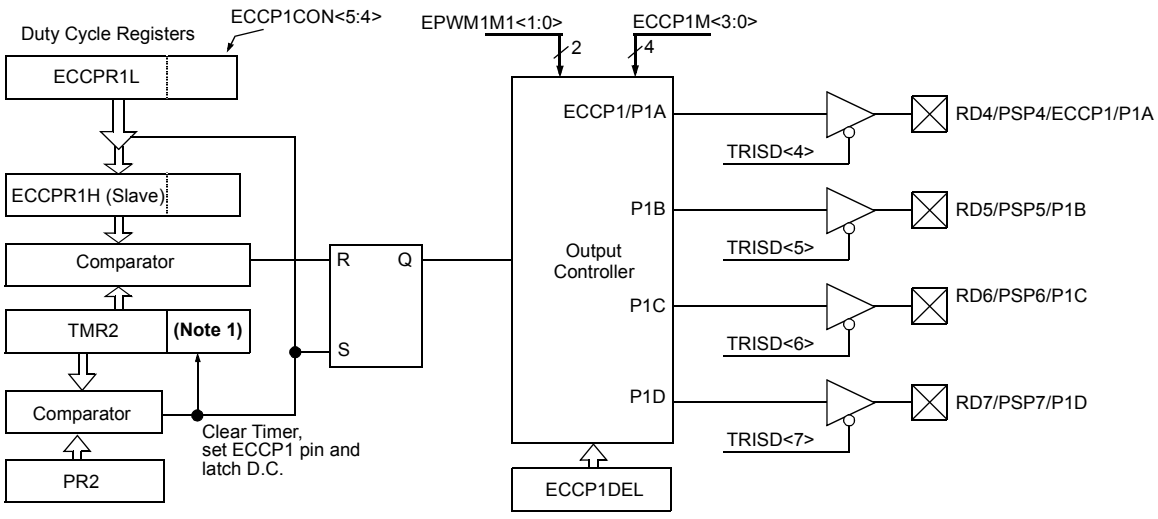

Note: The 8-bit TMR2 register is concatenated with the 2-bit internal Q clock, or 2 bits of the prescaler to create the 10-bit time-base.

© 2003 Microchip Technology Inc.

FIGURE 16-2: PWM OUTPUT RELATIONSHIPS

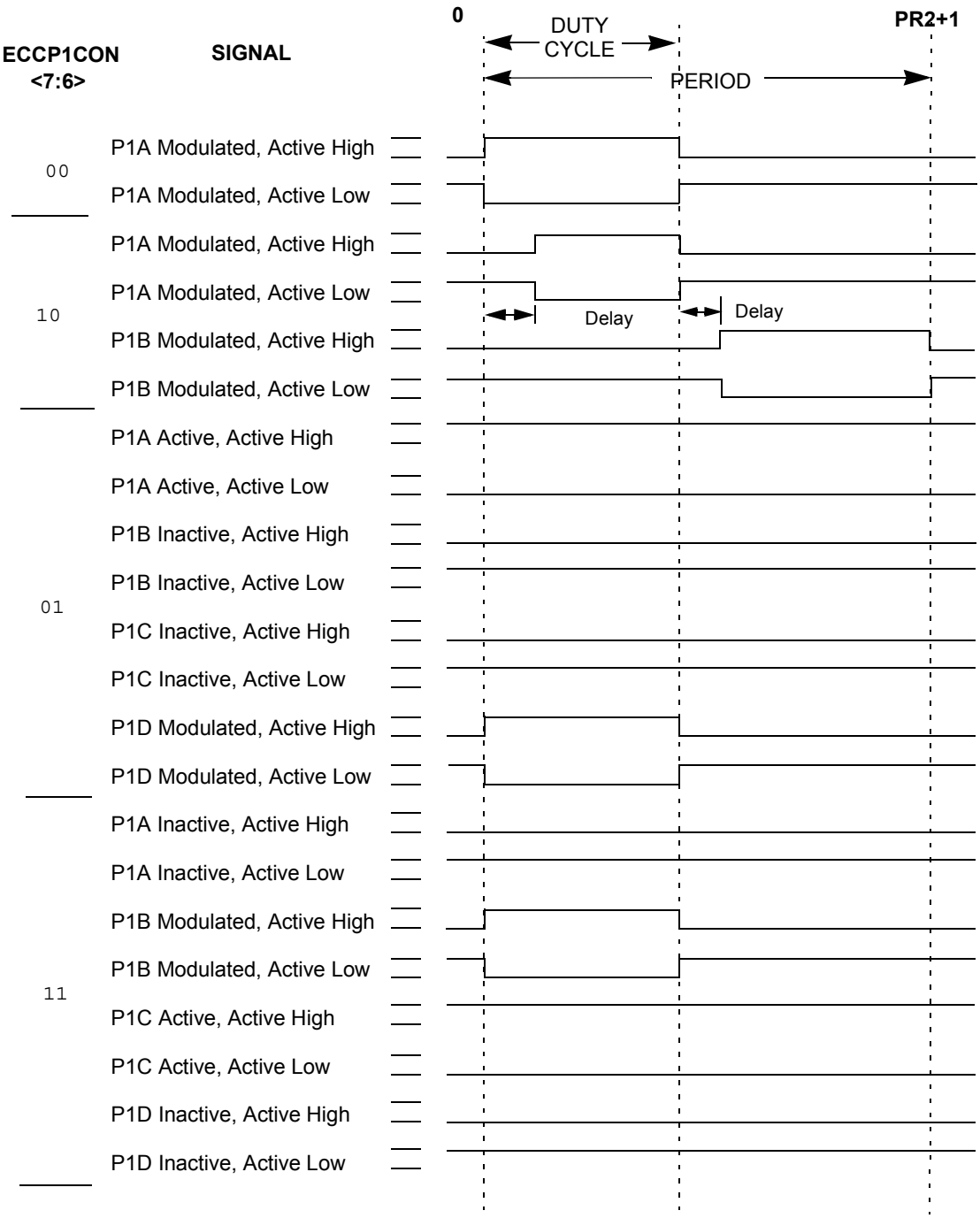

Relationships:

- Period = 4 * TOSC * (PR2 + 1) * (TMR2 prescale value)
- Duty Cycle = TOSC * (CCPR1L<7:0>:CCP1CON<5:4>) * (TMR2 prescale value)
- Delay = 4 * TOSC * ECCP1DEL

16.5.2 HALF-BRIDGE MODE

In the Half-Bridge Output mode, two pins are used as outputs to drive push-pull loads. The RD4/PSP4/ECCP1/P1A pin has the PWM output signal, while the RD5/PSP5/P1B pin has the complementary PWM output signal (Figure 16-3). This mode can be used for half-bridge applications, as shown in Figure 16-4, or for full-bridge applications, where four power switches are being modulated with two PWM signals.

In Half-Bridge Output mode, the programmable deadband delay can be used to prevent shoot-through current in bridge power devices. The value of register ECCP1DEL dictates the number of clock cycles before the output is driven active. If the value is greater than the duty cycle, the corresponding output remains inactive during the entire cycle. See Section 16.5.4 for more details of the deadband delay operations.

Since the P1A and P1B outputs are multiplexed with the PORTD<4> and PORTD<5> data latches, the TRISD<4> and TRISD<5> bits must be cleared to configure P1A and P1B as outputs.

FIGURE 16-3: HALF-BRIDGE PWM OUTPUT

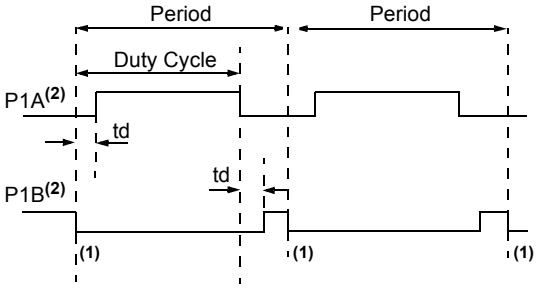

td = Deadband Delay

Note 1: At this time, the TMR2 register is equal to the PR2 register.

2: Output signals are shown as asserted high.

FIGURE 16-4: EXAMPLES OF HALF-BRIDGE OUTPUT MODE APPLICATIONS

Standard Half-Bridge Circuit ("Push-Pull")

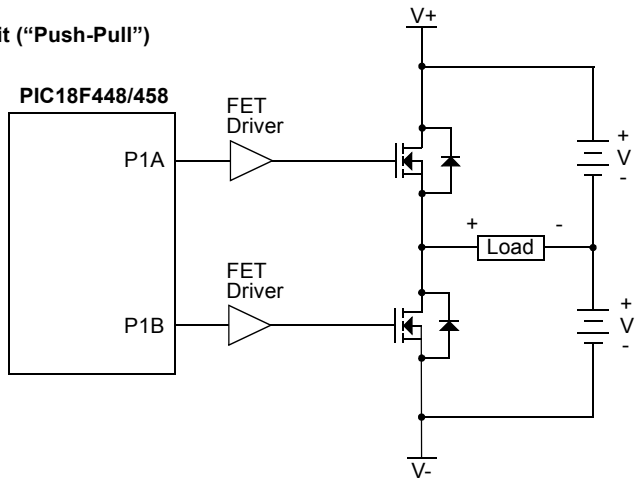

Half-Bridge Output Driving a Full-Bridge Circuit

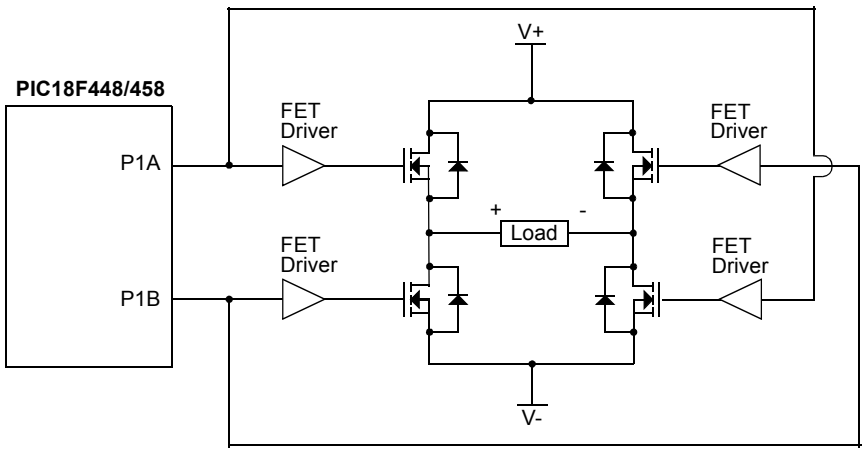

© 2003 Microchip Technology Inc.

16.5.3 FULL-BRIDGE MODE

In Full-Bridge Output mode, four pins are used as outputs; however, only two outputs are active at a time. In the Forward mode, pin RD4/PSP4/ECCP1/P1A is continuously active, and pin RD7/PSP7/P1D is modulated. In the Reverse mode, RD6/PSP6/P1C pin is continuously active, and RD5/PSP5/P1B pin is modulated. These are illustrated in Figure 16-5.

P1A, P1B, P1C and P1D outputs are multiplexed with the PORTD<4:7> data latches. The TRISD<4:7> bits must be cleared to make the P1A, P1B, P1C, and P1D pins output.

FIGURE 16-5: FULL-BRIDGE PWM OUTPUT

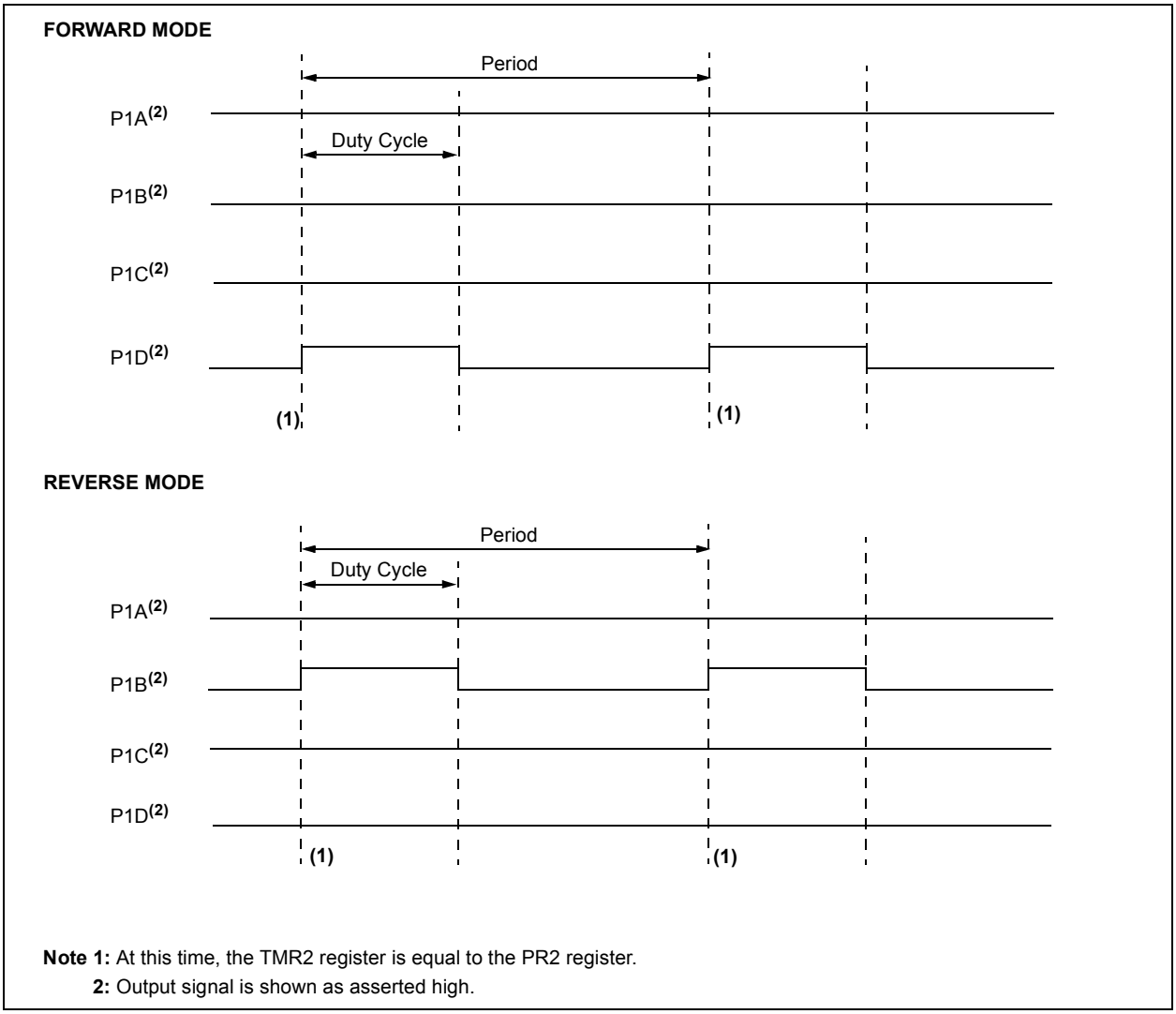

Note 1: At this time, the TMR2 register is equal to the PR2 register.
2: Output signal is shown as asserted high.

FIGURE 16-6: EXAMPLE OF FULL-BRIDGE APPLICATION

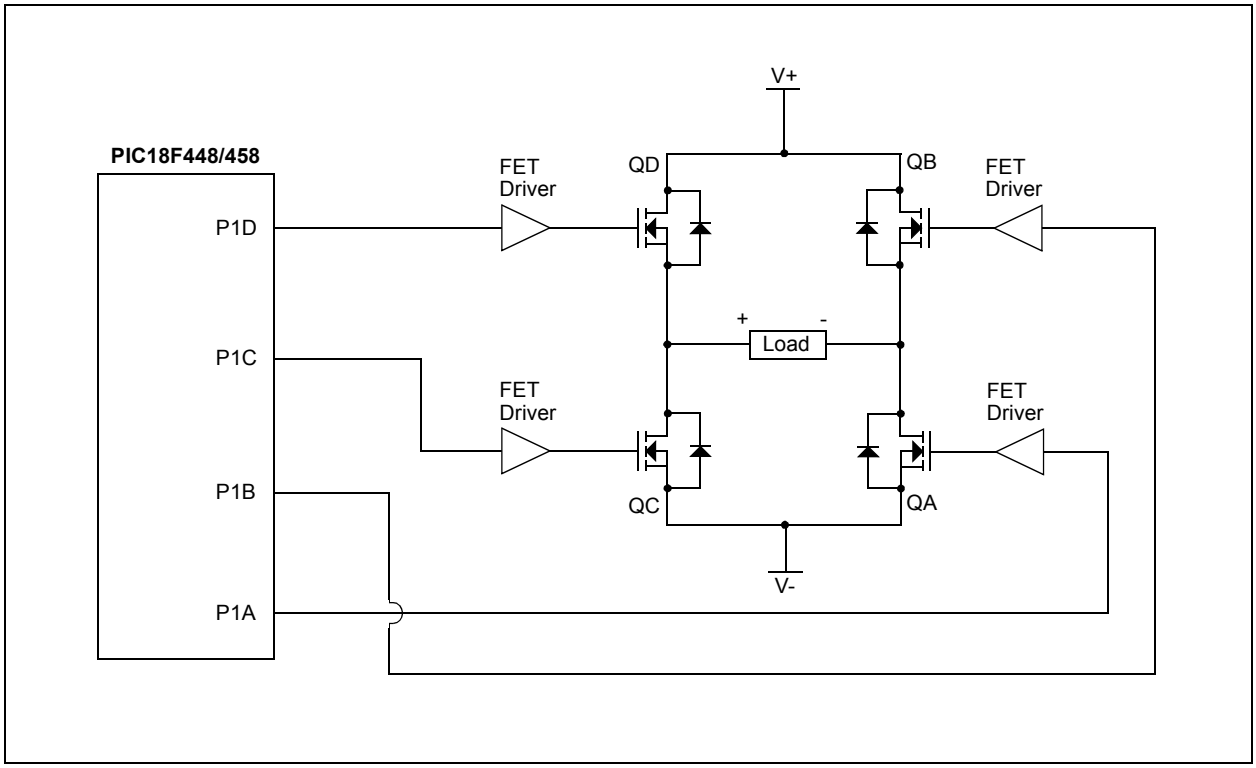

16.5.3.1 Direction Change in Full-Bridge Mode

In the Full-Bridge Output mode, the EPWM1M1 bit in the ECCP1CON register allows user to control the Forward/Reverse direction. When the application firmware changes this direction control bit, the ECCP1 module will assume the new direction on the next PWM cycle. The current PWM cycle still continues, however, the non-modulated outputs, P1A and P1C signals, will transition to the new direction TOSC, 4 TOSC or 16 TOSC earlier (for T2CKRS<1:0> = `00`, `01` or `1x`, respectively), before the end of the period. During this transition cycle, the modulated outputs, P1B and P1D, will go to the inactive state (Figure 16-7).

Note that in the Full-Bridge Output mode, the ECCP module does not provide any deadband delay. In general, since only one output is modulated at all times, deadband delay is not required. However, there is a situation where a deadband delay might be required. This situation occurs when all of the following conditions are true:

1. The direction of the PWM output changes when the duty cycle of the output is at or near 100%.
2. The turn off time of the power switch, including the power device and driver circuit, is greater than turn on time.

Figure 16-8 shows an example where the PWM direction changes from forward to reverse, at a near 100% duty cycle. At time t1, the output P1A and P1D become inactive, while output P1C becomes active. In this example, since the turn off time of the power devices is longer than the turn on time, a shoot-through current flows through power devices QB and QD (see Figure 16-6) for the duration of 't'. The same phenomenon will occur to power devices QA and QC for PWM direction change from reverse to forward.

If changing PWM direction at high duty cycle is required for an application, one of the following requirements must be met:

1. Avoid changing PWM output direction at or near 100% duty cycle.
2. Use switch drivers that compensate the slow turn off of the power devices. The total turn off time (t_{off}) of the power device and the driver must be less than the turn on time (t_{on}).

© 2003 Microchip Technology Inc.

FIGURE 16-7: PWM DIRECTION CHANGE

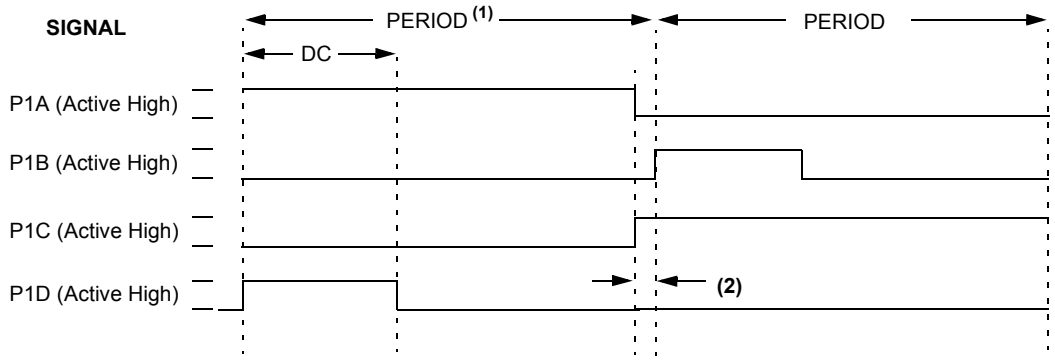

Note 1: The direction bit in the ECCP1 Control Register (ECCP1CON.EPWM1M1) is written any time during the PWM cycle.

2: The P1A and P1C signals switch at intervals of TOSC, 4 TOSC or 16 TOSC, depending on the Timer2 prescaler value earlier when changing direction. The modulated P1B and P1D signals are inactive at this time.

FIGURE 16-8: PWM DIRECTION CHANGE AT NEAR 100% DUTY CYCLE

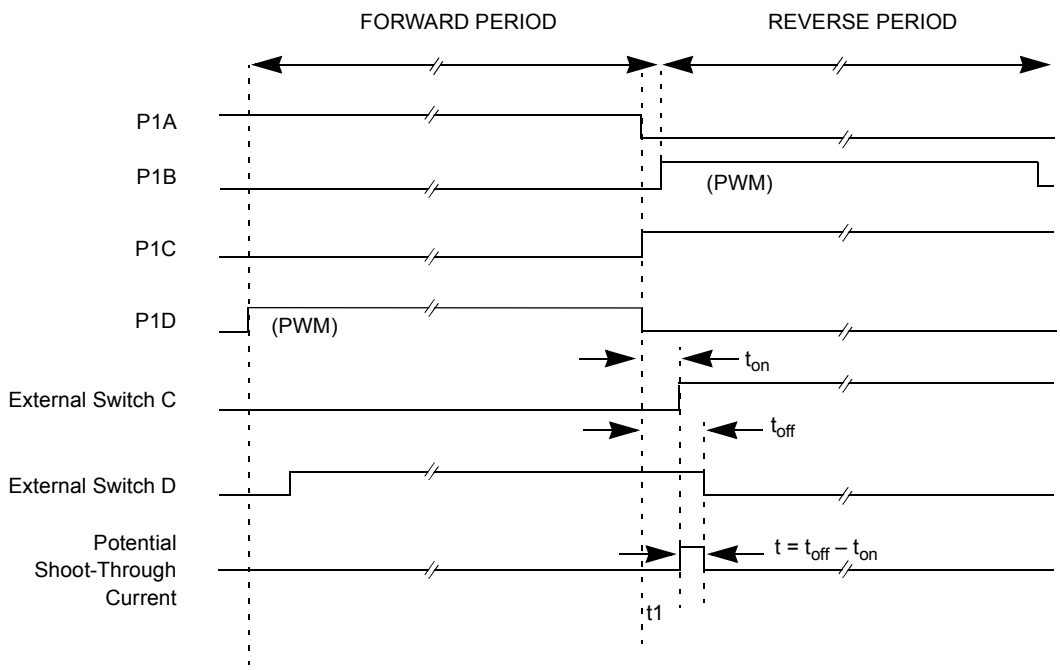

Note 1: All signals are shown as active high.

2: t_{on} is the Turn-on Delay of power switch and driver.

3: t_{off} is the Turn-off Delay of power switch and driver.

16.5.4 PROGRAMMABLE DEADBAND DELAY

In half-bridge or full-bridge applications, where all power switches are modulated at the PWM frequency at all times, the power switches normally require longer time to turn off than to turn on. If both the upper and lower power switches are switched at the same time (one turned on, and the other turned off), both switches will be on for a short period of time until one switch completely turns off. During this time, a very high current (*shoot-through current*) flows through both power switches, shorting the bridge supply. To avoid this potentially destructive shoot-through current from flowing during switching, turning on the power switch is normally delayed to allow the other switch to completely turn off.

In the Half-Bridge Output mode, a digitally programmable deadband delay is available to avoid shoot-through current from destroying the bridge power switches. The delay occurs at the signal transition from the non-active state to the active state. See Figure 16-3 for illustration. The ECCP1DEL register (Register 16-2) sets the amount of delay.

16.5.5 SYSTEM IMPLEMENTATION

When the ECCP module is used in the PWM mode, the application hardware must use the proper external pull-up and/or pull-down resistors on the PWM output pins. When the microcontroller powers up, all of the I/O pins are in the high-impedance state. The external pull-up and pull-down resistors must keep the power switch devices in the off state, until the microcontroller drives the I/O pins with the proper signal levels, or activates the PWM output(s).

16.5.6 START-UP CONSIDERATIONS

Prior to enabling the PWM outputs, the P1A, P1B, P1C and P1D latches may not be in the proper states. Enabling the TRISD bits for output at the same time with the ECCP1 module may cause damage to the power switch devices. The ECCP1 module must be enabled in the proper Output mode with the TRISD bits enabled as inputs. Once the ECCP1 completes a full PWM cycle, the P1A, P1B, P1C and P1D output latches are properly initialized. At this time, the TRISD bits can be enabled for outputs to start driving the power switch devices. The completion of a full PWM cycle is indicated by the TMR2IF bit going from a '0' to a '1'.

16.5.7 OUTPUT POLARITY CONFIGURATION

The ECCP1M<1:0> bits in the ECCP1CON register allow user to choose the logic conventions (asserted high/low) for each of the outputs.

The PWM output polarities must be selected before the PWM outputs are enabled. Charging the polarity configuration while the PWM outputs are active is not recommended, since it may result in unpredictable operation.

REGISTER 16-2: ECCP1DEL REGISTER

R/W-0	R/W-0	R/W-0	R/W-0	R/W-0	R/W-0	R/W-0	R/W-0
EPDC7	EPDC6	EPDC5	EPDC4	EPDC3	EPDC2	EPDC1	EPDC0
bit 7							bit 0

bit 7-0 **EPDC<7:0>:** PWM Delay Count for Half-Bridge Output Mode bits
Number of FOSC/4 (TOSC*4) cycles between the P1A transition and the P1B transition

Legend:			
R = Readable bit	W = Writable bit	U = Unimplemented bit, read as '0'	
- n = Value at POR	'1' = Bit is set	'0' = Bit is cleared	x = Bit is unknown

© 2003 Microchip Technology Inc.

16.5.8 SETUP FOR PWM OPERATION

The following steps should be taken when configuring the ECCP1 module for PWM operation:

1. Configure the PWM module:
   a) Disable the ECCP1/P1A, P1B, P1C and/or P1D outputs by setting the respective TRISD bits.
   b) Set the PWM period by loading the PR2 register.
   c) Set the PWM duty cycle by loading the ECCPR1L register and ECCP1CON<5:4> bits.
   d) Configure the ECCP1 module for the desired PWM operation by loading the ECCP1CON register with the appropriate value. With the ECCP1M<3:0> bits, select the active high/low levels for each PWM output. With the EPWM1M<1:0> bits, select one of the available Output modes.
   e) For Half-Bridge Output mode, set the dead-band delay by loading the ECCP1DEL register with the appropriate value.
2. Configure and start TMR2:
   a) Clear the TMR2 interrupt flag bit by clearing the TMR2IF bit in the PIR1 register.
   b) Set the TMR2 prescale value by loading the T2CKPS bits (T2CON<1:0>).
   c) Enable Timer2 by setting the TMR2ON bit (T2CON<2>) register.
3. Enable PWM outputs after a new cycle has started:
   a) Wait until TMR2 overflows (TMR2IF bit becomes a '1'). The new PWM cycle begins here.
   b) Enable the ECCP1/P1A, P1B, P1C and/or P1D pin outputs by clearing the respective TRISD bits.

TABLE 16-5: REGISTERS ASSOCIATED WITH ENHANCED PWM AND TIMER2

Name	Bit 7	Bit 6	Bit 5	Bit 4	Bit 3	Bit 2	Bit 1	Bit 0	Value on POR, BOR	Value on all other RESETS
INTCON	GIE/GIEH	PEIE/GIEL	TMR0IE	INT0IE	RBIE	TMR0IF	INT0IF	RBIF	0000 000x	0000 000u
RCON	IPEN	—	—	$\overline{RI}$	$\overline{TO}$	$\overline{PD}$	$\overline{POR}$	$\overline{BOR}$	0--1 11qq	0--q qquu
IPR2	—	CMIP	—	EEIP	BCLIP	LVDIP	TMR3IP	ECCP1IP	-1-1 1111	-1-1 1111
PIR2	—	CMIF	—	EEIF	BCLIF	LVDIF	TMR3IF	ECCP1IF	-0-0 0000	-0-0 0000
PIE2	—	CMIE	—	EEIE	BCLIE	LVDIE	TMR3IE	ECCP1IE	-0-0 0000	-0-0 0000
TMR2	Timer2 Module Register								0000 0000	0000 0000
PR2	Timer2 Module Period Register								1111 1111	1111 1111
T2CON	—	TOUTPS3	TOUTPS2	TOUTPS1	TOUTPS0	TMR2ON	T2CKPS1	T2CKPS0	-000 0000	-000 0000
TRISD	PORTD Data Direction Register								1111 1111	1111 1111
ECCPR1H	Enhanced Capture/Compare/PWM Register1 High Byte								xxxx xxxx	uuuu uuuu
ECCPR1L	Enhanced Capture/Compare/PWM Register1 Low Byte								xxxx xxxx	uuuu uuuu
ECCP1CON	EPWM1M1	EPWM1M0	EDC1B1	EDC1B0	ECCP1M3	ECCP1M2	ECCP1M1	ECCP1M0	0000 0000	0000 0000
ECCPAS	ECCPASE	ECCPAS2	ECCPAS1	ECCPAS0	PSSAC1	PSSAC0	PSSBD1	PSSBD0	0000 0000	0000 0000
ECCP1DEL	EPDC7	EPDC6	EPDC5	EPDC4	EPDC3	EPDC2	EPDC1	EPDC0	0000 0000	uuuu uuuu

Legend: x = unknown, u = unchanged, - = unimplemented, read as '0'. Shaded cells are not used by the ECCP module.

16.6 Enhanced CCP Auto-Shutdown

When the ECCP is programmed for any of the PWM modes, the output pins associated with its function may be configured for Auto-Shutdown.

Auto-Shutdown allows the internal output of either of the two comparator modules, or the external interrupt 0, to asynchronously disable the ECCP output pins. Thus, an external analog or digital event can discontinue an ECCP sequence. The comparator output(s) to be used is selected by setting the proper mode bits in the ECCPAS register. To use external interrupt INT0 as a shutdown event, INT0IE must be set. To use either of the comparator module outputs as a shutdown event, corresponding comparators must be enabled. When a shutdown occurs, the selected output values (PSSACn, PSSBDn) are written to the ECCP port pins.

The internal shutdown signal is gated with the outputs and will immediately and asynchronously disable the outputs. If the internal shutdown is still in effect at the time a new cycle begins, that entire cycle is suppressed, thus eliminating narrow, glitchy pulses.

The ECCPASE bit is set by hardware upon a comparator event and can only be cleared in software. The ECCP outputs can be re-enabled only by clearing the ECCPASE bit.

The Auto-Shutdown mode can be manually entered by writing a '1' to the ECCPASE bit.

REGISTER 16-3: ECCPAS: ENHANCED CAPTURE/COMPARE/PWM AUTO-SHUTDOWN CONTROL REGISTER

R/W-0	R/W-0	R/W-0	R/W-0	R/W-0	R/W-0	R/W-0	R/W-0
ECCPASE	ECCPAS2	ECCPAS1	ECCPAS0	PSSAC1	PSSAC0	PSSBD1	PSSBD0
bit 7							bit 0

bit 7 **ECCPASE:** ECCP Auto-Shutdown Event Status bit
0 = ECCP outputs enabled, no shutdown event
1 = A shutdown event has occurred, must be reset in software to re-enable ECCP

bit 6-4 **ECCPAS<2:0>:** ECCP Auto-Shutdown bits
000 = No Auto-Shutdown enabled, comparators have no effect on ECCP
001 = Comparator 1 output will cause shutdown
010 = Comparator 2 output will cause shutdown
011 = Either Comparator 1 or 2 can cause shutdown
100 = INT0
101 = INT0 or Comparator 1 output
110 = INT0 or Comparator 2 output
111 = INT0 or Comparator 1 or Comparator 2 output

bit 3-2 **PSSACn:** Pin A and C Shutdown State Control bits
00 = Drive Pins A and C to '0'
01 = Drive Pins A and C to '1'
1x = Pins A and C tri-state

bit 1-0 **PSSBDn:** Pin B and D Shutdown State Control bits
00 = Drive Pins B and D to '0'
01 = Drive Pins B and D to '1'
1x = Pins B and D tri-state

Legend:			
R = Readable bit	W = Writable bit	U = Unimplemented bit, read as '0'	
- n = Value at POR	'1' = Bit is set	'0' = Bit is cleared	x = Bit is unknown

© 2003 Microchip Technology Inc.

17.0 MASTER SYNCHRONOUS SERIAL PORT (MSSP) MODULE

17.1 Master SSP (MSSP) Module Overview

The Master Synchronous Serial Port (MSSP) module is a serial interface useful for communicating with other peripheral or microcontroller devices. These peripheral devices may be serial EEPROMs, shift registers, display drivers, A/D converters, etc. The MSSP module can operate in one of two modes:

- Serial Peripheral Interface (SPI)
- Inter-Integrated Circuit (I^2C)
  - Full Master mode
  - Slave mode (with general address call)

The I^2C interface supports the following modes in hardware:

- Master mode
- Multi-Master mode
- Slave mode

17.2 Control Registers

The MSSP module has three associated registers. These include a status register (SSPSTAT) and two control registers (SSPCON1 and SSPCON2). The use of these registers and their individual configuration bits differ significantly, depending on whether the MSSP module is operated in SPI or I^2C mode.

Additional details are provided under the individual sections.

17.3 SPI Mode

The SPI mode allows 8 bits of data to be synchronously transmitted and received simultaneously. All four modes of SPI are supported. To accomplish communication, typically three pins are used:

- Serial Data Out (SDO) - RC5/SDO
- Serial Data In (SDI) - RC4/SDI/SDA
- Serial Clock (SCK) - RC3/SCK/SCL

Additionally, a fourth pin may be used when in a Slave mode of operation:

- Slave Select ($\overline{SS}$) - RF7/$\overline{SS}$

Figure 17-1 shows the block diagram of the MSSP module when operating in SPI mode.

FIGURE 17-1: MSSP BLOCK DIAGRAM (SPI MODE)

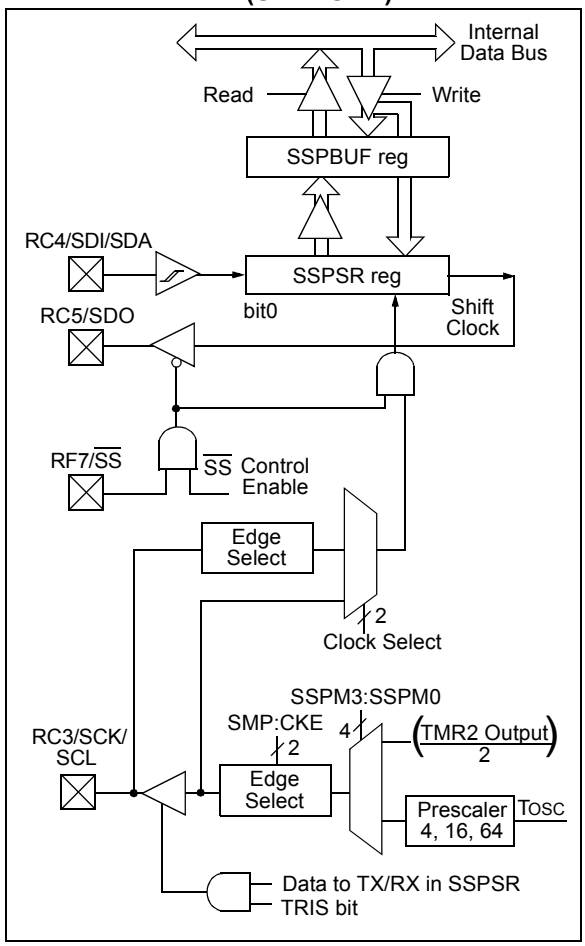

17.3.1 REGISTERS

The MSSP module has four registers for SPI mode operation. These are:

- MSSP Control Register1 (SSPCON1)
- MSSP Status Register (SSPSTAT)
- Serial Receive/Transmit Buffer (SSPBUF)
- MSSP Shift Register (SSPSR) - Not directly accessible

SSPCON1 and SSPSTAT are the control and status registers in SPI mode operation. The SSPCON1 register is readable and writable. The lower 6 bits of the SSPSTAT are read only. The upper two bits of the SSPSTAT are read/write.

SSPSR is the shift register used for shifting data in or out. SSPBUF is the buffer register to which data bytes are written to or read from.

In receive operations, SSPSR and SSPBUF together create a double buffered receiver. When SSPSR receives a complete byte, it is transferred to SSPBUF and the SSPIF interrupt is set.

During transmission, the SSPBUF is not double-buffered. A write to SSPBUF will write to both SSPBUF and SSPSR.

REGISTER 17-1: SSPSTAT: MSSP STATUS REGISTER (SPI MODE)

R/W-0	R/W-0	R-0	R-0	R-0	R-0	R-0	R-0
SMP	CKE	D/$\overline{A}$	P	S	R/$\overline{W}$	UA	BF
bit 7							bit 0

bit 7 **SMP:** Sample bit
SPI Master mode:
1 = Input data sampled at end of data output time
0 = Input data sampled at middle of data output time
SPI Slave mode:
SMP must be cleared when SPI is used in Slave mode

bit 6 **CKE:** SPI Clock Edge Select bit
When CKP = 0:
1 = Data transmitted on rising edge of SCK
0 = Data transmitted on falling edge of SCK
When CKP = 1:
1 = Data transmitted on falling edge of SCK
0 = Data transmitted on rising edge of SCK

bit 5 **D/$\overline{A}$:** Data/$\overline{Address}$ bit
Used in I^2C mode only

bit 4 **P:** STOP bit
Used in I^2C mode only. This bit is cleared when the MSSP module is disabled, SSPEN is cleared.

bit 3 **S:** START bit
Used in I^2C mode only

bit 2 **R/$\overline{W}$:** Read/Write bit information
Used in I^2C mode only

bit 1 **UA:** Update Address
Used in I^2C mode only

bit 0 **BF:** Buffer Full Status bit (Receive mode only)
1 = Receive complete, SSPBUF is full
0 = Receive not complete, SSPBUF is empty

Legend:			
R = Readable bit	W = Writable bit	U = Unimplemented bit, read as '0'	
- n = Value at POR	'1' = Bit is set	'0' = Bit is cleared	x = Bit is unknown

© 2003 Microchip Technology Inc.

REGISTER 17-2: SSPCON1: MSSP CONTROL REGISTER 1 (SPI MODE)

R/W-0	R/W-0	R/W-0	R/W-0	R/W-0	R/W-0	R/W-0	R/W-0
WCOL	SSPOV	SSPEN	CKP	SSPM3	SSPM2	SSPM1	SSPM0
bit 7							bit 0

bit 7 **WCOL:** Write Collision Detect bit (Transmit mode only)

1 = The SSPBUF register is written while it is still transmitting the previous word (must be cleared in software)

0 = No collision

bit 6 **SSPOV:** Receive Overflow Indicator bit

SPI Slave mode:

1 = A new byte is received while the SSPBUF register is still holding the previous data. In case of overflow, the data in SSPSR is lost. Overflow can only occur in Slave mode.The user must read the SSPBUF, even if only transmitting data, to avoid setting overflow (must be cleared in software).

0 = No overflow

Note: In Master mode, the overflow bit is not set since each new reception (and transmission) is initiated by writing to the SSPBUF register.

bit 5 **SSPEN:** Synchronous Serial Port Enable bit

1 = Enables serial port and configures SCK, SDO, SDI, and $\overline{SS}$ as serial port pins

0 = Disables serial port and configures these pins as I/O port pins

Note: When enabled, these pins must be properly configured as input or output.

bit 4 **CKP:** Clock Polarity Select bit

1 = IDLE state for clock is a high level

0 = IDLE state for clock is a low level

bit 3-0 **SSPM3:SSPM0:** Synchronous Serial Port Mode Select bits

0101 = SPI Slave mode, clock = SCK pin, $\overline{SS}$ pin control disabled, $\overline{SS}$ can be used as I/O pin

0100 = SPI Slave mode, clock = SCK pin, $\overline{SS}$ pin control enabled

0011 = SPI Master mode, clock = TMR2 output/2

0010 = SPI Master mode, clock = FOSC/64

0001 = SPI Master mode, clock = FOSC/16

0000 = SPI Master mode, clock = FOSC/4

Note: Bit combinations not specifically listed here are either reserved, or implemented in I^2C mode only.

Legend:			
R = Readable bit	W = Writable bit	U = Unimplemented bit, read as '0'	
- n = Value at POR	'1' = Bit is set	'0' = Bit is cleared	x = Bit is unknown

17.3.2 OPERATION

When initializing the SPI, several options need to be specified. This is done by programming the appropriate control bits (SSPCON1<5:0>) and SSPSTAT<7:6>. These control bits allow the following to be specified:

- Master mode (SCK is the clock output)
- Slave mode (SCK is the clock input)
- Clock Polarity (IDLE state of SCK)
- Data Input Sample Phase (middle or end of data output time)
- Clock Edge (output data on rising/falling edge of SCK)
- Clock Rate (Master mode only)
- Slave Select mode (Slave mode only)

The MSSP consists of a transmit/receive Shift Register (SSPSR) and a buffer register (SSPBUF). The SSPSR shifts the data in and out of the device, MSb first. The SSPBUF holds the data that was written to the SSPSR, until the received data is ready. Once the 8 bits of data have been received, that byte is moved to the SSPBUF register. Then the buffer full detect bit, BF (SSPSTAT<0>), and the interrupt flag bit, SSPIF, are set. This double-buffering of the received data (SSPBUF) allows the next byte to start reception before reading the data that was just received. Any write to the SSPBUF register during transmission/reception of data will be ignored, and the write collision detect bit, WCOL (SSPCON1<7>), will be set. User software must clear the WCOL bit so that it can be determined if the following write(s) to the SSPBUF register completed successfully.

When the application software is expecting to receive valid data, the SSPBUF should be read before the next byte of data to transfer is written to the SSPBUF. Buffer full bit, BF (SSPSTAT<0>), indicates when SSPBUF has been loaded with the received data (transmission is complete). When the SSPBUF is read, the BF bit is cleared. This data may be irrelevant if the SPI is only a transmitter. Generally, the MSSP interrupt is used to determine when the transmission/reception has completed. The SSPBUF must be read and/or written. If the interrupt method is not going to be used, then software polling can be done to ensure that a write collision does not occur. Example 17-1 shows the loading of the SSPBUF (SSPSR) for data transmission.

The SSPSR is not directly readable or writable, and can only be accessed by addressing the SSPBUF register. Additionally, the MSSP status register (SSPSTAT) indicates the various status conditions.

EXAMPLE 17-1: LOADING THE SSPBUF (SSPSR) REGISTER

```
LOOP BTFSS SSPSTAT, BF    ;Has data been received(transmit complete)?
     BRA   LOOP           ;No
     MOVF  SSPBUF, W      ;WREG reg = contents of SSPBUF
     MOVWF RXDATA         ;Save in user RAM, if data is meaningful
     MOVF  TXDATA, W      ;W reg = contents of TXDATA
     MOVWF SSPBUF         ;New data to xmit
```


© 2003 Microchip Technology Inc.

17.3.3 ENABLING SPI I/O

To enable the serial port, SSP Enable bit, SSPEN (SSPCON1<5>), must be set. To reset or reconfigure SPI mode, clear the SSPEN bit, re-initialize the SSPCON registers, and then set the SSPEN bit. This configures the SDI, SDO, SCK, and $\overline{SS}$ pins as serial port pins. For the pins to behave as the serial port function, some must have their data direction bits (in the TRIS register) appropriately programmed as follows:

- SDI is automatically controlled by the SPI module
- SDO must have TRISC<5> bit cleared
- SCK (Master mode) must have TRISC<3> bit cleared
- SCK (Slave mode) must have TRISC<3> bit set
- $\overline{SS}$ must have TRISF<7> bit set

Any serial port function that is not desired may be overridden by programming the corresponding data direction (TRIS) register to the opposite value.

17.3.4 TYPICAL CONNECTION

Figure 17-2 shows a typical connection between two microcontrollers. The master controller (Processor 1) initiates the data transfer by sending the SCK signal. Data is shifted out of both shift registers on their programmed clock edge, and latched on the opposite edge of the clock. Both processors should be programmed to the same Clock Polarity (CKP), then both controllers would send and receive data at the same time. Whether the data is meaningful (or dummy data) depends on the application software. This leads to three scenarios for data transmission:

- Master sends data — Slave sends dummy data
- Master sends data — Slave sends data
- Master sends dummy data — Slave sends data

FIGURE 17-2: SPI MASTER/SLAVE CONNECTION

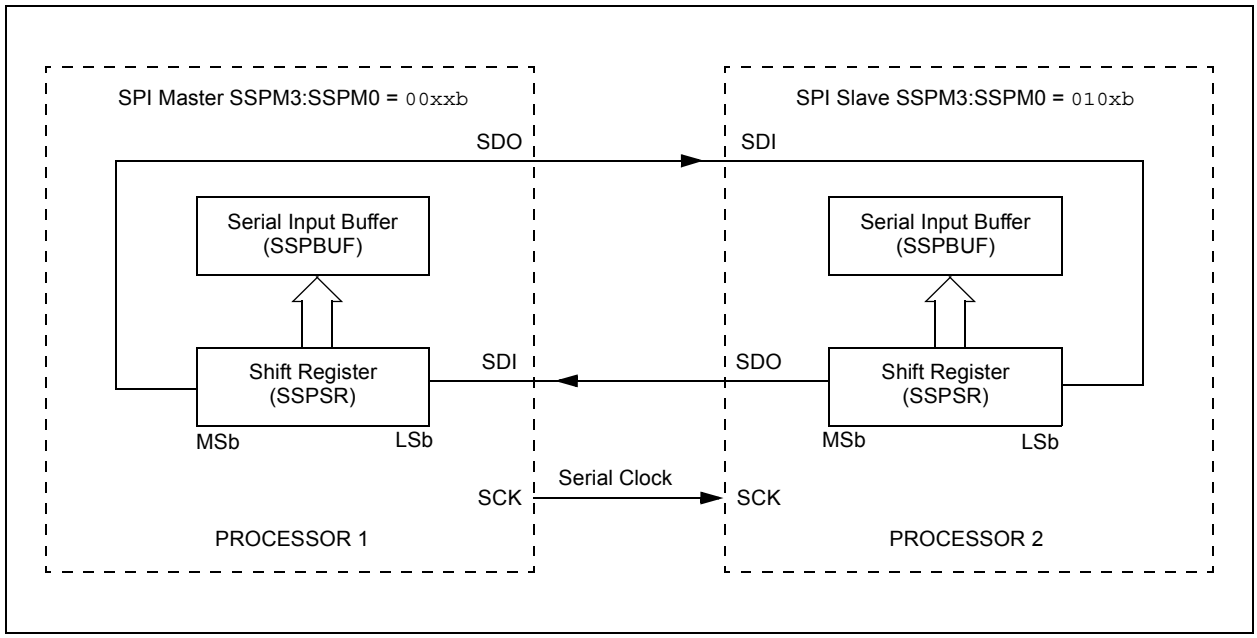

17.3.5 MASTER MODE

The master can initiate the data transfer at any time because it controls the SCK. The master determines when the slave (Processor 2, Figure 17-2) is to broadcast data by the software protocol.

In Master mode, the data is transmitted/received as soon as the SSPBUF register is written to. If the SPI is only going to receive, the SDO output could be disabled (programmed as an input). The SSPSR register will continue to shift in the signal present on the SDI pin at the programmed clock rate. As each byte is received, it will be loaded into the SSPBUF register as if a normal received byte (interrupts and status bits appropriately set). This could be useful in receiver applications as a “Line Activity Monitor” mode.

The clock polarity is selected by appropriately programming the CKP bit (SSPCON1<4>). This then, would give waveforms for SPI communication, as shown in Figure 17-3, Figure 17-5, and Figure 17-6, where the MSB is transmitted first. In Master mode, the SPI clock rate (bit rate) is user programmable to be one of the following:

- FOSC/4 (or TCY)
- FOSC/16 (or 4 • TCY)
- FOSC/64 (or 16 • TCY)
- Timer2 output/2

This allows a maximum data rate (at 40 MHz) of 10.00 Mbps.

Figure 17-3 shows the waveforms for Master mode. When the CKE bit is set, the SDO data is valid before there is a clock edge on SCK. The change of the input sample is shown based on the state of the SMP bit. The time when the SSPBUF is loaded with the received data is shown.

FIGURE 17-3: SPI MODE WAVEFORM (MASTER MODE)

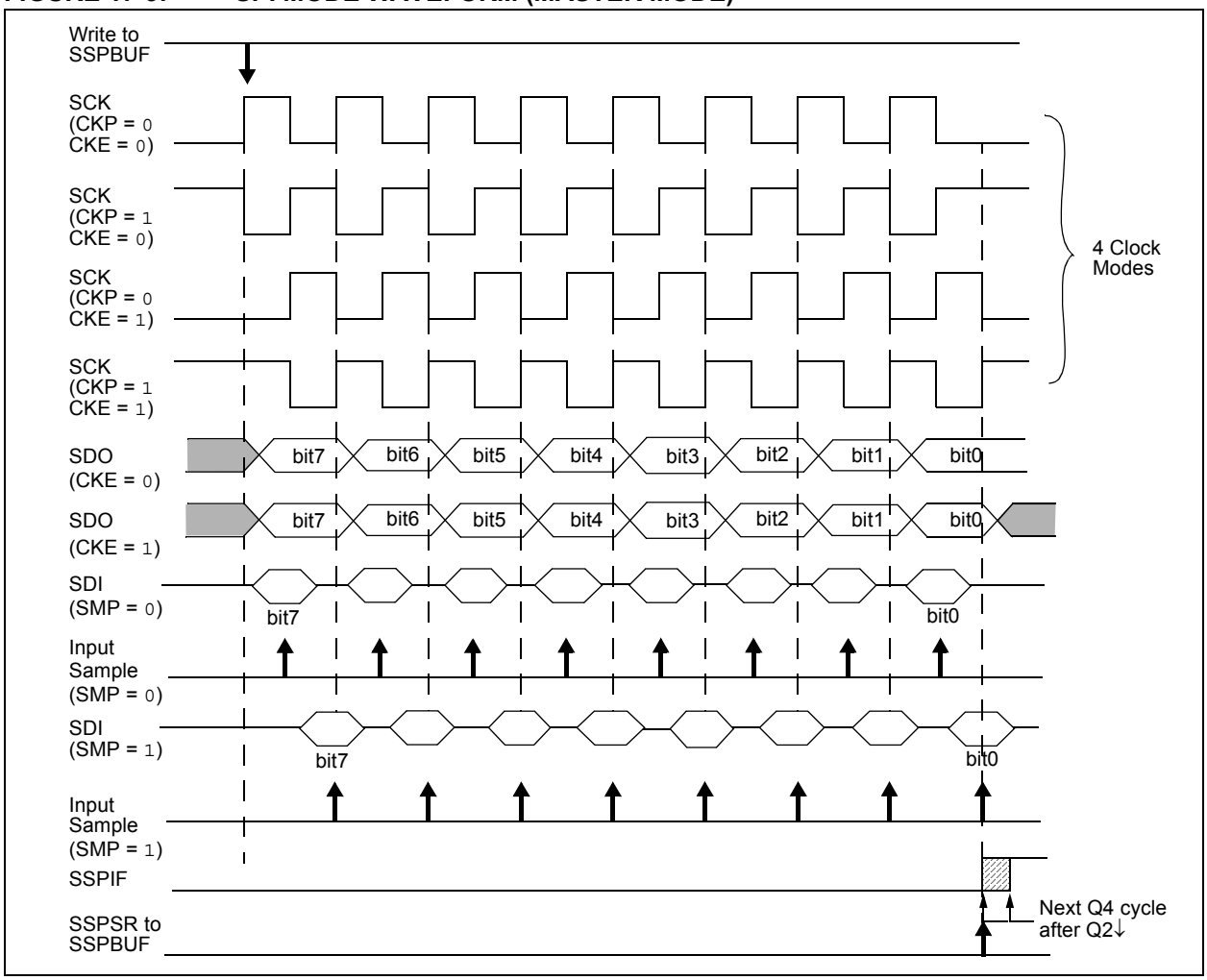

© 2003 Microchip Technology Inc.

17.3.6 SLAVE MODE

In Slave mode, the data is transmitted and received as the external clock pulses appear on SCK. When the last bit is latched, the SSPIF interrupt flag bit is set.

While in Slave mode, the external clock is supplied by the external clock source on the SCK pin. This external clock must meet the minimum high and low times as specified in the electrical specifications.

While in SLEEP mode, the slave can transmit/receive data. When a byte is received, the device will wake-up from SLEEP.

17.3.7 SLAVE SELECT SYNCHRONIZATION

The $\overline{SS}$ pin allows a Synchronous Slave mode. The SPI must be in Slave mode with $\overline{SS}$ pin control enabled (SSPCON1<3:0> = 04h). The pin must not be driven low for the $\overline{SS}$ pin to function as an input. The Data Latch must be high. When the $\overline{SS}$ pin is low, transmission and reception are enabled and the SDO pin is driven. When the $\overline{SS}$ pin goes high, the SDO pin is no longer driven, even if in the middle of a transmitted byte, and becomes a floating output. External pull-up/pull-down resistors may be desirable, depending on the application.

Note 1: When the SPI is in Slave mode with $\overline{SS}$ pin control enabled (SSPCON<3:0> = 0100), the SPI module will reset if the $\overline{SS}$ pin is set to V_{DD}.

2: If the SPI is used in Slave mode with CKE set, then the $\overline{SS}$ pin control must be enabled.

When the SPI module resets, the bit counter is forced to '0'. This can be done by either forcing the $\overline{SS}$ pin to a high level, or clearing the SSPEN bit.

To emulate two-wire communication, the SDO pin can be connected to the SDI pin. When the SPI needs to operate as a receiver, the SDO pin can be configured as an input. This disables transmissions from the SDO. The SDI can always be left as an input (SDI function), since it cannot create a bus conflict.

FIGURE 17-4: SLAVE SYNCHRONIZATION WAVEFORM

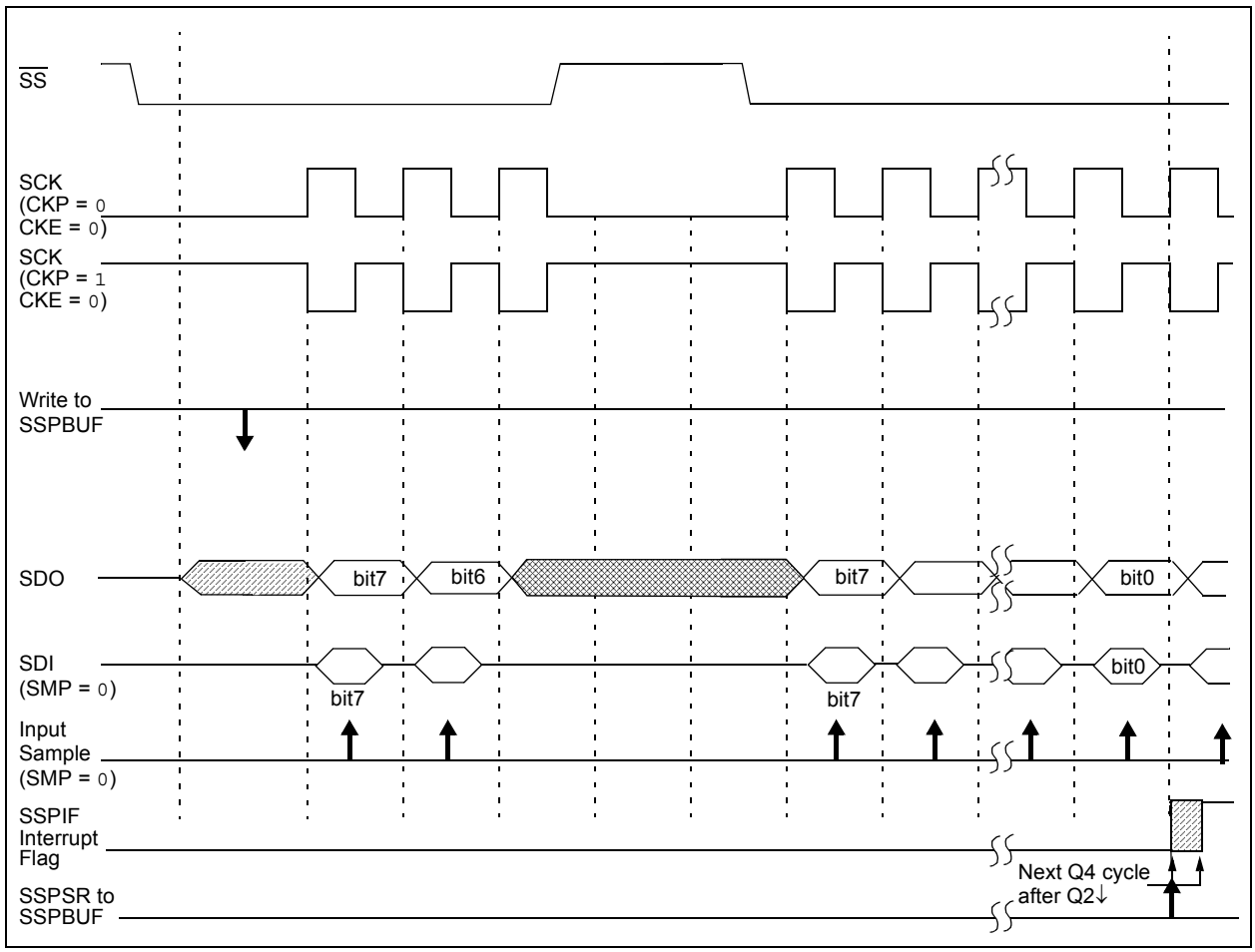

FIGURE 17-5: SPI MODE WAVEFORM (SLAVE MODE WITH CKE = 0)

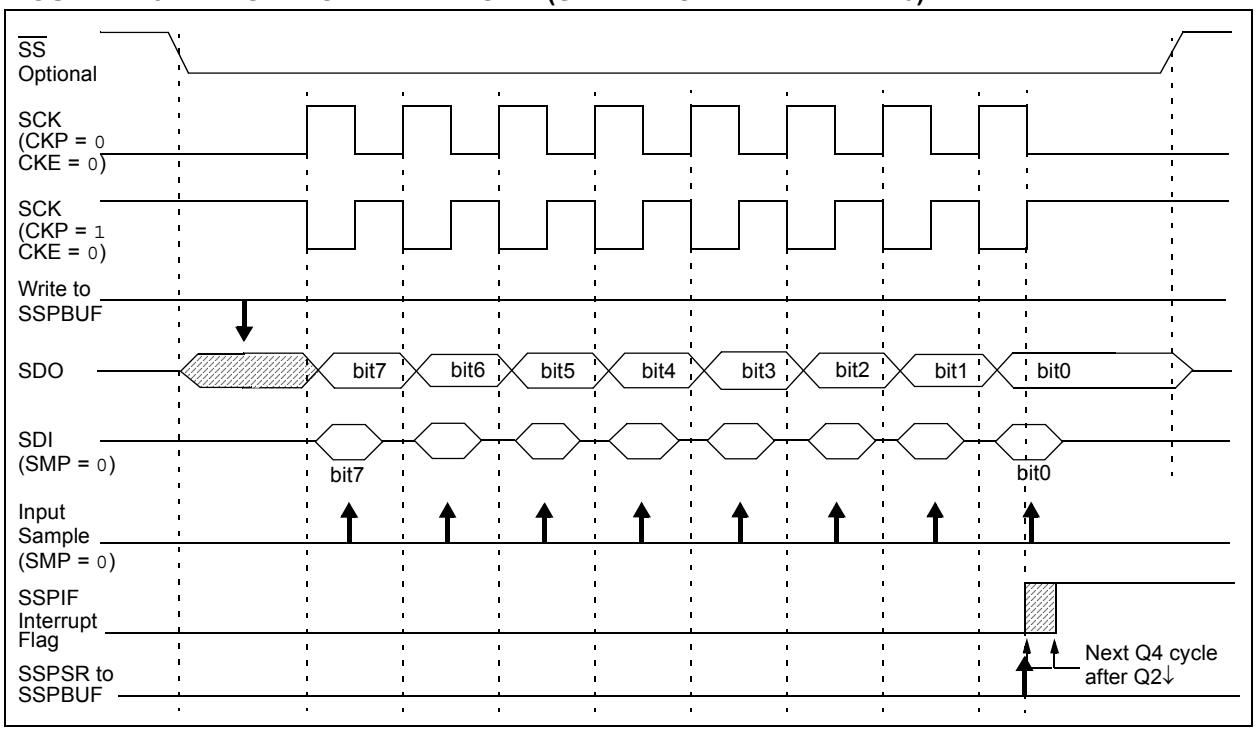

FIGURE 17-6: SPI MODE WAVEFORM (SLAVE MODE WITH CKE = 1)

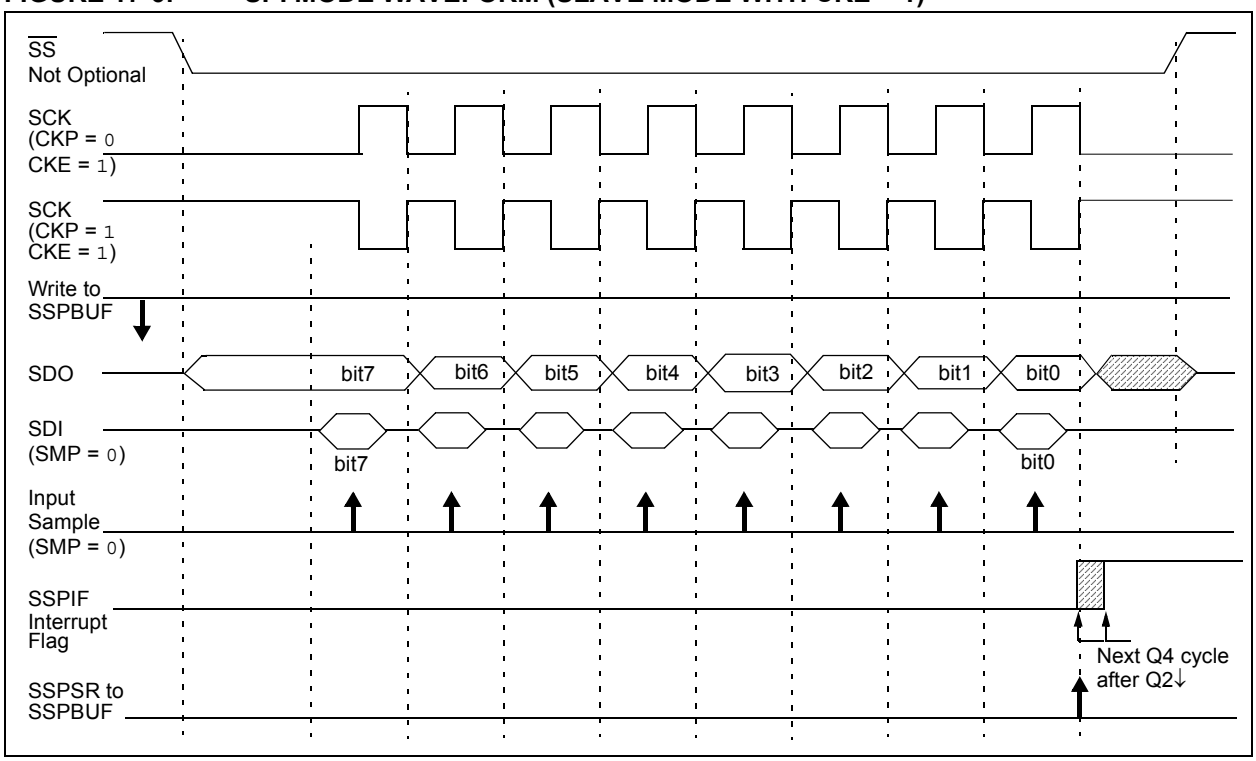

© 2003 Microchip Technology Inc.

17.3.8 SLEEP OPERATION

In Master mode, all module clocks are halted and the transmission/reception will remain in that state until the device wakes from SLEEP. After the device returns to normal mode, the module will continue to transmit/receive data.

In Slave mode, the SPI transmit/receive shift register operates asynchronously to the device. This allows the device to be placed in SLEEP mode and data to be shifted into the SPI transmit/receive shift register. When all 8 bits have been received, the MSSP interrupt flag bit will be set and if enabled, will wake the device from SLEEP.

17.3.9 EFFECTS OF A RESET

A RESET disables the MSSP module and terminates the current transfer.

17.3.10 BUS MODE COMPATIBILITY

Table 17-1 shows the compatibility between the standard SPI modes and the states of the CKP and CKE control bits.

TABLE 17-1: SPI BUS MODES

Standard SPI Mode Terminology	Control Bits State	
	CKP	CKE
0, 0	0	1
0, 1	0	0
1, 0	1	1
1, 1	1	0

There is also a SMP bit, which controls when the data is sampled.

TABLE 17-2: REGISTERS ASSOCIATED WITH SPI OPERATION

Name	Bit 7	Bit 6	Bit 5	Bit 4	Bit 3	Bit 2	Bit 1	Bit 0	Value on POR, BOR	Value on all other RESETS
INTCON	GIE/GIEH	PEIE/GIEL	TMR0IE	INT0IE	RBIE	TMR0IF	INT0IF	RBIF	0000 0000	0000 0000
PIR1	PSPIF	ADIF	RCIF	TXIF	SSPIF	CCP1IF	TMR2IF	TMR1IF	0000 0000	0000 0000
PIE1	PSPIE	ADIE	RCIE	TXIE	SSPIE	CCP1IE	TMR2IE	TMR1IE	0000 0000	0000 0000
IPR1	PSPIP	ADIP	RCIP	TXIP	SSPIP	CCP1IP	TMR2IP	TMR1IP	1111 1111	1111 1111
TRISC	PORTC Data Direction Register								1111 1111	1111 1111
TRISF	TRISF7	TRISF6	TRISF5	TRISF4	TRISF3	TRISF2	TRISF1	TRISF0	1111 1111	uuuu uuuu
SSPBUF	Synchronous Serial Port Receive Buffer/Transmit Register								xxxx xxxx	uuuu uuuu
SSPCON	WCOL	SSPOV	SSPEN	CKP	SSPM3	SSPM2	SSPM1	SSPM0	0000 0000	0000 0000
SSPSTAT	SMP	CKE	D/$\overline{A}$	P	S	R/$\overline{W}$	UA	BF	0000 0000	0000 0000

Legend: x = unknown, u = unchanged, - = unimplemented, read as '0'. Shaded cells are not used by the MSSP in SPI mode.

17.4 I²C Mode

The MSSP module in I²C mode fully implements all master and slave functions (including general call support) and provides interrupts on START and STOP bits in hardware to determine a free bus (multi-master function). The MSSP module implements the standard mode specifications, as well as 7-bit and 10-bit addressing.

Two pins are used for data transfer:

- Serial clock (SCL) - RC3/SCK/SCL
- Serial data (SDA) - RC4/SDI/SDA

The user must configure these pins as inputs or outputs through the TRISC<4:3> bits.

FIGURE 17-7: MSSP BLOCK DIAGRAM (I²C MODE)

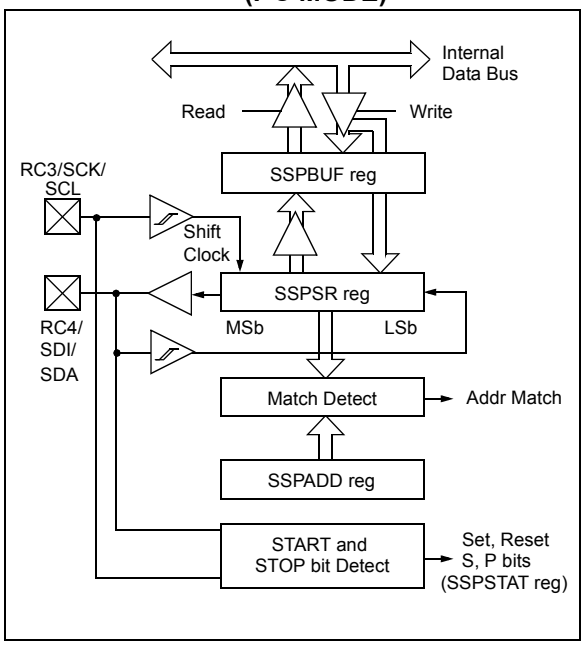

17.4.1 REGISTERS

The MSSP module has six registers for I²C operation. These are:

- MSSP Control Register1 (SSPCON1)
- MSSP Control Register2 (SSPCON2)
- MSSP Status Register (SSPSTAT)
- Serial Receive/Transmit Buffer (SSPBUF)
- MSSP Shift Register (SSPSR) - Not directly accessible
- MSSP Address Register (SSPADD)

SSPCON, SSPCON2 and SSPSTAT are the control and status registers in I²C mode operation. The SSPCON and SSPCON2 registers are readable and writable. The lower 6 bits of the SSPSTAT are read only. The upper two bits of the SSPSTAT are read/write.

SSPSR is the shift register used for shifting data in or out. SSPBUF is the buffer register to which data bytes are written to or read from.

SSPADD register holds the slave device address when the SSP is configured in I²C Slave mode. When the SSP is configured in Master mode, the lower seven bits of SSPADD act as the baud rate generator reload value.

In receive operations, SSPSR and SSPBUF together, create a double-buffered receiver. When SSPSR receives a complete byte, it is transferred to SSPBUF and the SSPIF interrupt is set.

During transmission, the SSPBUF is not double-buffered. A write to SSPBUF will write to both SSPBUF and SSPSR.

© 2003 Microchip Technology Inc.

REGISTER 17-3: SSPSTAT: MSSP STATUS REGISTER (I^2C MODE)

R/W-0	R/W-0	R-0	R-0	R-0	R-0	R-0	R-0
SMP	CKE	D/$\overline{A}$	P	S	R/$\overline{W}$	UA	BF
bit 7							bit 0

bit 7 **SMP:** Slew Rate Control bit
In Master or Slave mode:
1 = Slew rate control disabled for Standard Speed mode (100 kHz and 1 MHz)
0 = Slew rate control enabled for High Speed mode (400 kHz)

bit 6 **CKE:** SMBus Select bit
In Master or Slave mode:
1 = Enable SMBus specific inputs
0 = Disable SMBus specific inputs

bit 5 **D/$\overline{A}$:** Data/$\overline{\text{Address}}$ bit
In Master mode:
Reserved
In Slave mode:
1 = Indicates that the last byte received or transmitted was data
0 = Indicates that the last byte received or transmitted was address

bit 4 **P:** STOP bit
1 = Indicates that a STOP bit has been detected last
0 = STOP bit was not detected last

Note: This bit is cleared on RESET and when SSPEN is cleared.

bit 3 **S:** START bit
1 = Indicates that a START bit has been detected last
0 = START bit was not detected last

Note: This bit is cleared on RESET and when SSPEN is cleared.

bit 2 **R/$\overline{W}$:** Read/Write bit Information (I^2C mode only)
In Slave mode:
1 = Read
0 = Write

Note: This bit holds the R/W bit information following the last address match. This bit is only valid from the address match to the next START bit, STOP bit, or not $\overline{ACK}$ bit.

In Master mode:
1 = Transmit is in progress
0 = Transmit is not in progress

Note: ORing this bit with SEN, RSEN, PEN, RCEN, or ACKEN will indicate if the MSSP is in IDLE mode.

bit 1 **UA:** Update Address (10-bit Slave mode only)
1 = Indicates that the user needs to update the address in the SSPADD register
0 = Address does not need to be updated

bit 0 **BF:** Buffer Full Status bit
In Transmit mode:
1 = Receive complete, SSPBUF is full
0 = Receive not complete, SSPBUF is empty
In Receive mode:
1 = Data transmit in progress (does not include the $\overline{ACK}$ and STOP bits), SSPBUF is full
0 = Data transmit complete (does not include the $\overline{ACK}$ and STOP bits), SSPBUF is empty

Legend:			
R = Readable bit	W = Writable bit	U = Unimplemented bit, read as '0'	
- n = Value at POR	'1' = Bit is set	'0' = Bit is cleared	x = Bit is unknown

REGISTER 17-4: SSPCON1: MSSP CONTROL REGISTER 1 (I^2C MODE)

R/W-0	R/W-0	R/W-0	R/W-0	R/W-0	R/W-0	R/W-0	R/W-0
WCOL	SSPOV	SSPEN	CKP	SSPM3	SSPM2	SSPM1	SSPM0
bit 7							bit 0

bit 7 **WCOL:** Write Collision Detect bit

In Master Transmit mode:
1 = A write to the SSPBUF register was attempted while the I^2C conditions were not valid for a transmission to be started (must be cleared in software)
0 = No collision

In Slave Transmit mode:
1 = The SSPBUF register is written while it is still transmitting the previous word (must be cleared in software)
0 = No collision

In Receive mode (Master or Slave modes):
This is a “don’t care” bit

bit 6 **SSPOV:** Receive Overflow Indicator bit

In Receive mode:
1 = A byte is received while the SSPBUF register is still holding the previous byte (must be cleared in software)
0 = No overflow

In Transmit mode:
This is a “don’t care” bit in Transmit mode

bit 5 **SSPEN:** Synchronous Serial Port Enable bit
1 = Enables the serial port and configures the SDA and SCL pins as the serial port pins
0 = Disables serial port and configures these pins as I/O port pins

Note: When enabled, the SDA and SCL pins must be properly configured as input or output.

bit 4 **CKP:** SCK Release Control bit

In Slave mode:
1 = Release clock
0 = Holds clock low (clock stretch), used to ensure data setup time

In Master mode:
Unused in this mode

bit 3-0 **SSPM3:SSPM0:** Synchronous Serial Port Mode Select bits
1111 = I^2C Slave mode, 10-bit address with START and STOP bit interrupts enabled
1110 = I^2C Slave mode, 7-bit address with START and STOP bit interrupts enabled
1011 = I^2C Firmware Controlled Master mode (Slave IDLE)
1000 = I^2C Master mode, clock = FOSC / (4 * (SSPADD+1))
0111 = I^2C Slave mode, 10-bit address
0110 = I^2C Slave mode, 7-bit address

Note: Bit combinations not specifically listed here are either reserved, or implemented in SPI mode only.

Legend:			
R = Readable bit	W = Writable bit	U = Unimplemented bit, read as ‘0’	
- n = Value at POR	‘1’ = Bit is set	‘0’ = Bit is cleared	x = Bit is unknown

© 2003 Microchip Technology Inc.

REGISTER 17-5: SSPCON2: MSSP CONTROL REGISTER 2 (I^2C MODE)

R/W-0	R/W-0	R/W-0	R/W-0	R/W-0	R/W-0	R/W-0	R/W-0
GCEN	ACKSTAT	ACKDT	ACKEN	RCEN	PEN	RSEN	SEN
bit 7							bit 0

bit 7 **GCEN:** General Call Enable bit (Slave mode only)
1 = Enable interrupt when a general call address (0000h) is received in the SSPSR
0 = General call address disabled

bit 6 **ACKSTAT:** Acknowledge Status bit (Master Transmit mode only)
1 = Acknowledge was not received from slave
0 = Acknowledge was received from slave

bit 5 **ACKDT:** Acknowledge Data bit (Master Receive mode only)
1 = Not Acknowledge
0 = Acknowledge

Note: Value that will be transmitted when the user initiates an Acknowledge sequence at the end of a receive.

bit 4 **ACKEN:** Acknowledge Sequence Enable bit (Master Receive mode only)
1 = Initiate Acknowledge sequence on SDA and SCL pins, and transmit ACKDT data bit. Automatically cleared by hardware.
0 = Acknowledge sequence IDLE

bit 3 **RCEN:** Receive Enable bit (Master Mode only)
1 = Enables Receive mode for I^2C
0 = Receive IDLE

bit 2 **PEN:** STOP Condition Enable bit (Master mode only)
1 = Initiate STOP condition on SDA and SCL pins. Automatically cleared by hardware.
0 = STOP condition IDLE

bit 1 **RSEN:** Repeated START Condition Enabled bit (Master mode only)
1 = Initiate Repeated START condition on SDA and SCL pins. Automatically cleared by hardware.
0 = Repeated START condition IDLE

bit 0 **SEN:** START Condition Enabled/Stretch Enabled bit
In Master mode:
1 = Initiate START condition on SDA and SCL pins. Automatically cleared by hardware.
0 = START condition IDLE
In Slave mode:
1 = Clock stretching is enabled for both Slave Transmit and Slave Receive (stretch enabled)
0 = Clock stretching is enabled for Slave Transmit only (Legacy mode)

Legend:			
R = Readable bit	W = Writable bit	U = Unimplemented bit, read as '0'	
- n = Value at POR	'1' = Bit is set	'0' = Bit is cleared	x = Bit is unknown

Note: For bits ACKEN, RCEN, PEN, RSEN, SEN: If the I^2C module is not in the IDLE mode, this bit may not be set (no spooling) and the SSPBUF may not be written (or writes to the SSPBUF are disabled).

17.4.2 OPERATION

The MSSP module functions are enabled by setting MSSP Enable bit, SSPEN (SSPCON<5>).

The SSPCON1 register allows control of the I^2C operation. Four mode selection bits (SSPCON<3:0>) allow one of the following I^2C modes to be selected:

- I^2C Master mode, clock = OSC/4 (SSPADD +1)
- I^2C Slave mode (7-bit address)
- I^2C Slave mode (10-bit address)
- I^2C Slave mode (7-bit address), with START and STOP bit interrupts enabled
- I^2C Slave mode (10-bit address), with START and STOP bit interrupts enabled
- I^2C Firmware Controlled Master operation, slave is IDLE

Selection of any I^2C mode, with the SSPEN bit set, forces the SCL and SDA pins to be open drain, provided these pins are programmed to inputs by setting the appropriate TRISC bits. To ensure proper operation of the module, pull-up resistors must be provided externally to the SCL and SDA pins.

17.4.3 SLAVE MODE

In Slave mode, the SCL and SDA pins must be configured as inputs (TRISC<4:3> set). The MSSP module will override the input state with the output data when required (slave-transmitter).

The I^2C Slave mode hardware will always generate an interrupt on an address match. Through the mode select bits, the user can also choose to interrupt on START and STOP bits.

When an address is matched or the data transfer after an address match is received, the hardware automatically will generate the Acknowledge ($\overline{ACK}$) pulse and load the SSPBUF register with the received value currently in the SSPSR register.

Any combination of the following conditions will cause the MSSP module not to give this $\overline{ACK}$ pulse:

- The buffer full bit BF (SSPSTAT<0>) was set before the transfer was received.
- The overflow bit SSPOV (SSPCON<6>) was set before the transfer was received.

In this case, the SSPSR register value is not loaded into the SSPBUF, but bit SSPIF (PIR1<3>) is set. The BF bit is cleared by reading the SSPBUF register, while bit SSPOV is cleared through software.

The SCL clock input must have a minimum high and low for proper operation. The high and low times of the I^2C specification, as well as the requirement of the MSSP module, are shown in timing parameter #100 and parameter #101.

17.4.3.1 Addressing

Once the MSSP module has been enabled, it waits for a START condition to occur. Following the START condition, the 8-bits are shifted into the SSPSR register. All incoming bits are sampled with the rising edge of the clock (SCL) line. The value of register SSPSR<7:1> is compared to the value of the SSPADD register. The address is compared on the falling edge of the eighth clock (SCL) pulse. If the addresses match, and the BF and SSPOV bits are clear, the following events occur:

1. The SSPSR register value is loaded into the SSPBUF register.
2. The buffer full bit BF is set.
3. An $\overline{ACK}$ pulse is generated.
4. MSSP interrupt flag bit, SSPIF (PIR1<3>), is set (interrupt is generated if enabled) on the falling edge of the ninth SCL pulse.

In 10-bit Address mode, two address bytes need to be received by the slave. The five Most Significant bits (MSbs) of the first address byte specify if this is a 10-bit address. Bit R/$\overline{W}$ (SSPSTAT<2>) must specify a write so the slave device will receive the second address byte. For a 10-bit address, the first byte would equal '`11110 A9 A8 0`', where '`A9`' and '`A8`' are the two MSbs of the address. The sequence of events for 10-bit address is as follows, with steps 7 through 9 for the slave-transmitter:

1. Receive first (high) byte of Address (bits SSPIF, BF and bit UA (SSPSTAT<1>) are set).
2. Update the SSPADD register with second (low) byte of Address (clears bit UA and releases the SCL line).
3. Read the SSPBUF register (clears bit BF) and clear flag bit SSPIF.
4. Receive second (low) byte of Address (bits SSPIF, BF, and UA are set).
5. Update the SSPADD register with the first (high) byte of Address. If match releases SCL line, this will clear bit UA.
6. Read the SSPBUF register (clears bit BF) and clear flag bit SSPIF.
7. Receive Repeated START condition.
8. Receive first (high) byte of Address (bits SSPIF and BF are set).
9. Read the SSPBUF register (clears bit BF) and clear flag bit SSPIF.

© 2003 Microchip Technology Inc.

17.4.3.2 Reception

When the R/$\overline{W}$ bit of the address byte is clear and an address match occurs, the R/$\overline{W}$ bit of the SSPSTAT register is cleared. The received address is loaded into the SSPBUF register and the SDA line is held low ($\overline{ACK}$).

When the address byte overflow condition exists, then the no Acknowledge ($\overline{ACK}$) pulse is given. An overflow condition is defined as either bit BF (SSPSTAT<0>) is set, or bit SSPOV (SSPCON1<6>) is set.

An MSSP interrupt is generated for each data transfer byte. Flag bit SSPIF (PIR1<3>) must be cleared in software. The SSPSTAT register is used to determine the status of the byte.

If SEN is enabled (SSPCON1<0> = 1), RC3/SCK/SCL will be held low (clock stretch) following each data transfer. The clock must be released by setting bit CKP (SSPCON<4>). See Section 17.4.4, Clock Stretching for more detail.

17.4.3.3 Transmission

When the R/$\overline{W}$ bit of the incoming address byte is set and an address match occurs, the R/$\overline{W}$ bit of the SSPSTAT register is set. The received address is loaded into the SSPBUF register. The $\overline{ACK}$ pulse will be sent on the ninth bit and pin RC3/SCK/SCL is held low, regardless of SEN (see Section 17.4.4, Clock Stretching for more detail). By stretching the clock, the master will be unable to assert another clock pulse until the slave is done preparing the transmit data. The transmit data must be loaded into the SSPBUF register, which also loads the SSPSR register. Then, pin RC3/SCK/SCL should be enabled by setting bit CKP (SSPCON1<4>). The eight data bits are shifted out on the falling edge of the SCL input. This ensures that the SDA signal is valid during the SCL high time (Figure 17-9).

The $\overline{ACK}$ pulse from the master-receiver is latched on the rising edge of the ninth SCL input pulse. If the SDA line is high (not $\overline{ACK}$), then the data transfer is complete. In this case, when the $\overline{ACK}$ is latched by the slave, the slave logic is reset (resets SSPSTAT register) and the slave monitors for another occurrence of the START bit. If the SDA line was low ($\overline{ACK}$), the next transmit data must be loaded into the SSPBUF register. Again, pin RC3/SCK/SCL must be enabled by setting bit CKP.

An MSSP interrupt is generated for each data transfer byte. The SSPIF bit must be cleared in software and the SSPSTAT register is used to determine the status of the byte. The SSPIF bit is set on the falling edge of the ninth clock pulse.

FIGURE 17-8: I^2C SLAVE MODE TIMING WITH SEN = 0 (RECEPTION, 7-BIT ADDRESS)

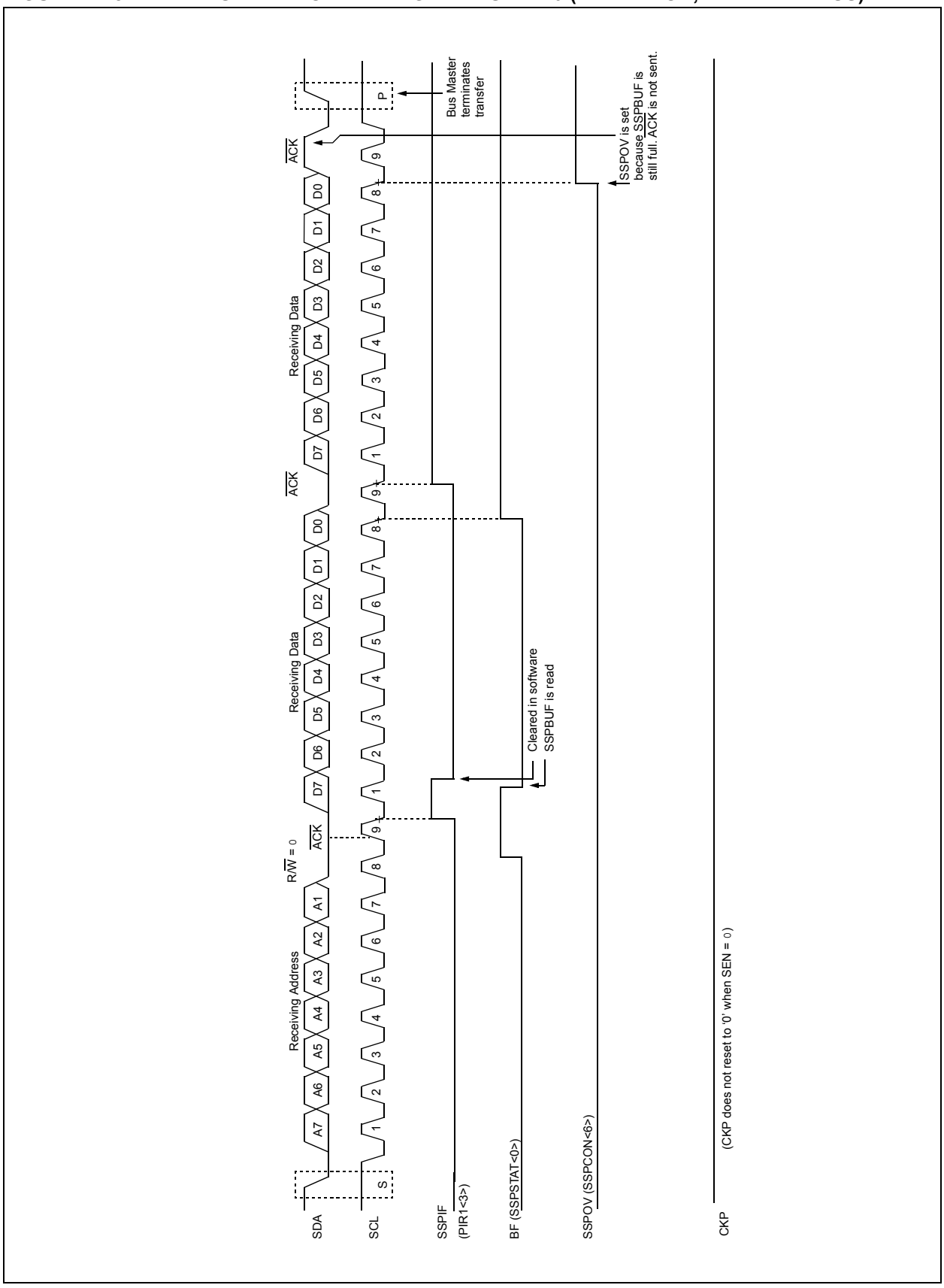

© 2003 Microchip Technology Inc.

FIGURE 17-9: I^2C SLAVE MODE TIMING (TRANSMISSION, 7-BIT ADDRESS)

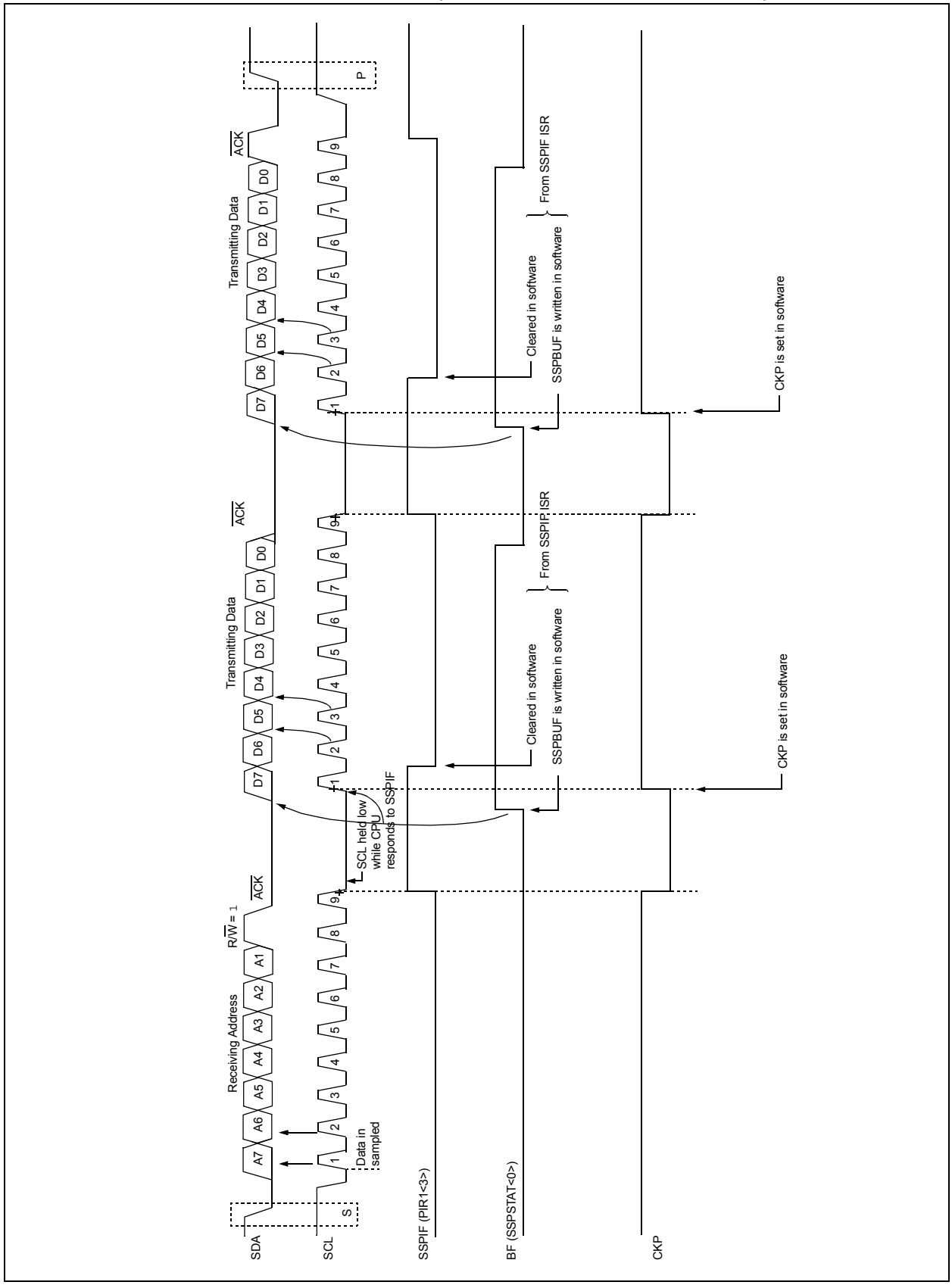

FIGURE 17-10: I²C SLAVE MODE TIMING WITH SEN = 0 (RECEPTION, 10-BIT ADDRESS)

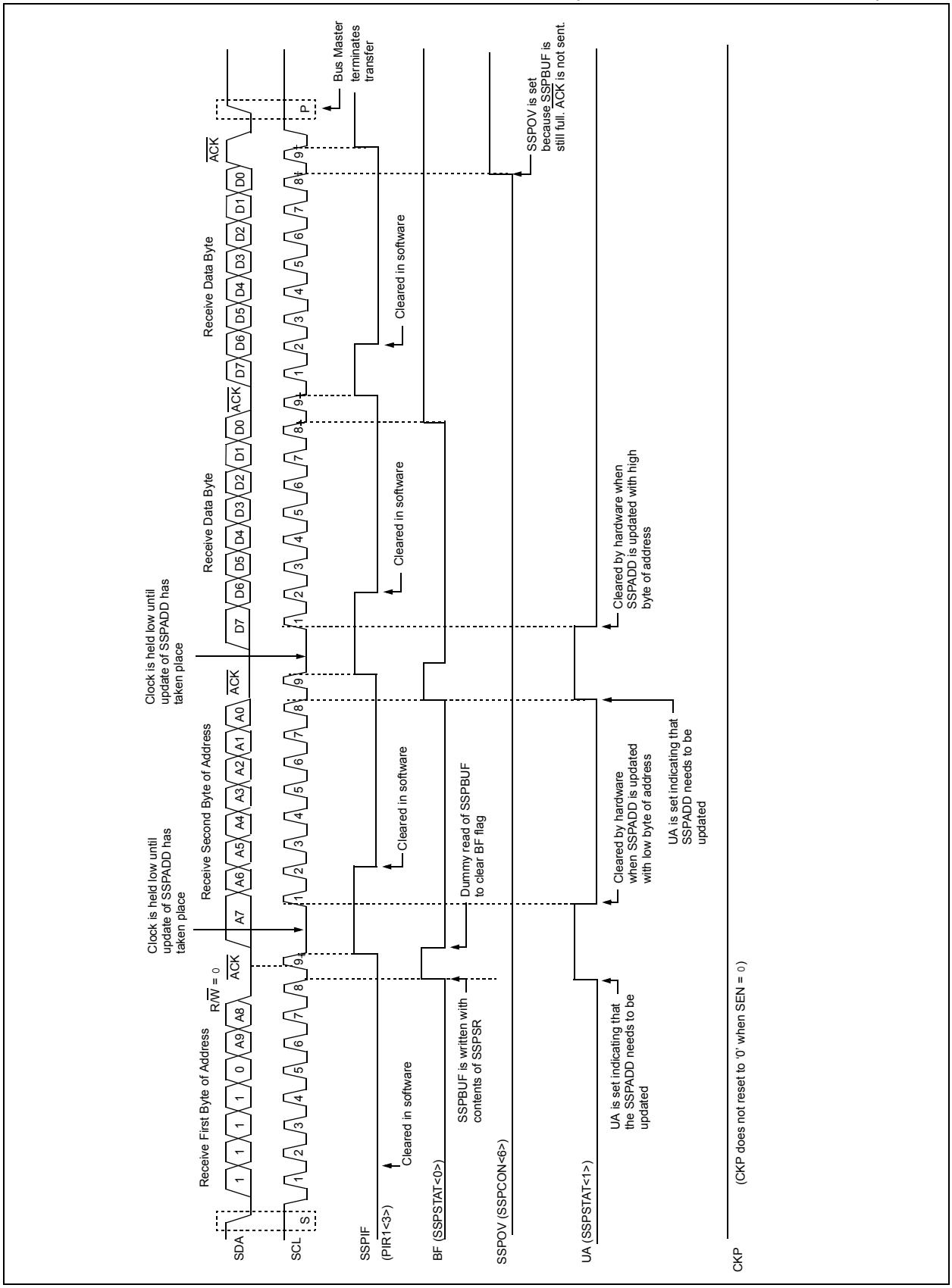

© 2003 Microchip Technology Inc.

FIGURE 17-11: I²C SLAVE MODE TIMING (TRANSMISSION, 10-BIT ADDRESS)

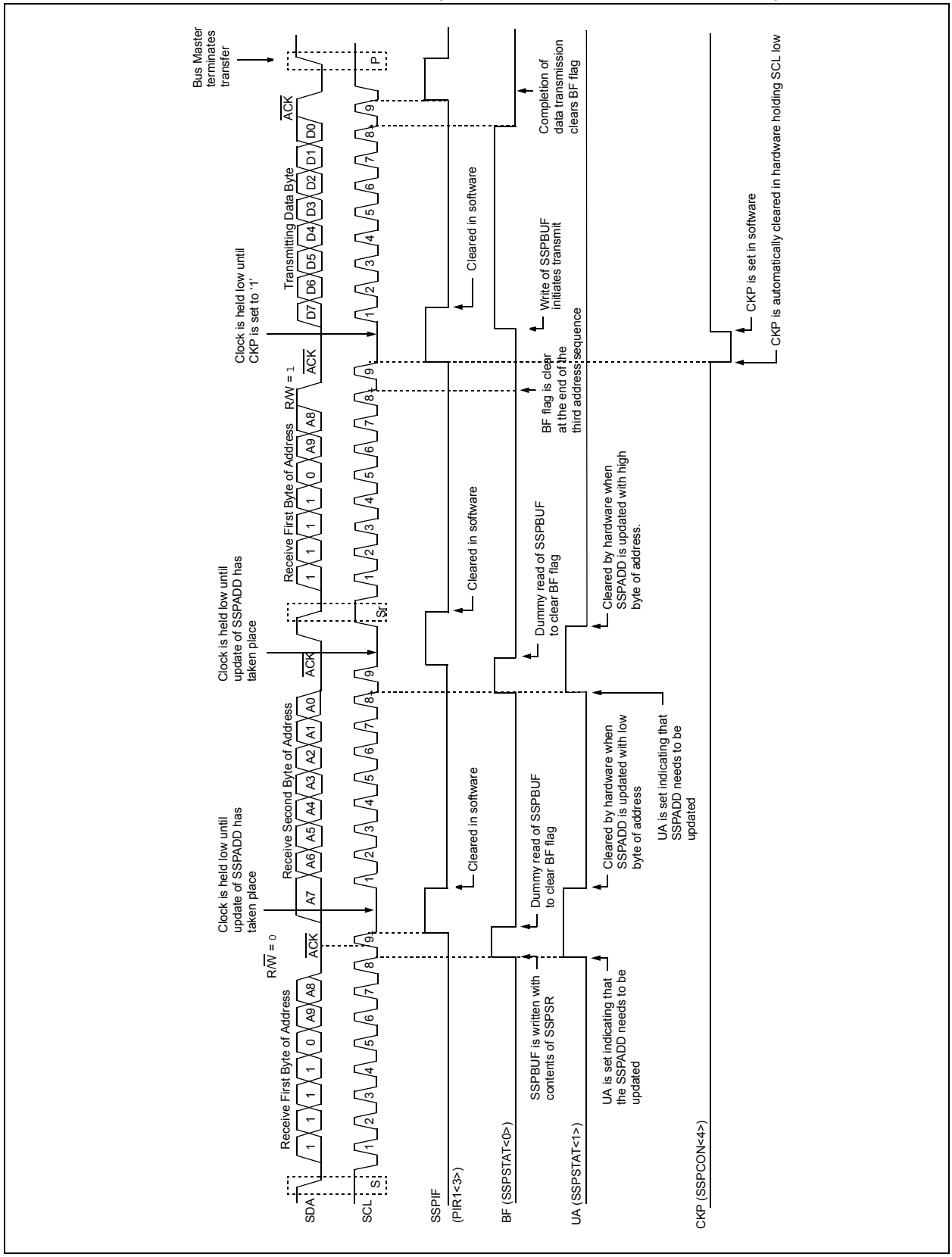

17.4.4 CLOCK STRETCHING

Both 7- and 10-bit Slave modes implement automatic clock stretching during a transmit sequence.

The SEN bit (SSPCON2<0>) allows clock stretching to be enabled during receives. Setting SEN will cause the SCL pin to be held low at the end of each data receive sequence.

17.4.4.1 Clock Stretching for 7-bit Slave Receive Mode (SEN = 1)

In 7-bit Slave Receive mode, on the falling edge of the ninth clock at the end of the $\overline{ACK}$ sequence, if the BF bit is set, the CKP bit in the SSPCON1 register is automatically cleared, forcing the SCL output to be held low. The CKP being cleared to '0' will assert the SCL line low. The CKP bit must be set in the user's ISR before reception is allowed to continue. By holding the SCL line low, the user has time to service the ISR and read the contents of the SSPBUF before the master device can initiate another receive sequence. This will prevent buffer overruns from occurring.

Note 1: If the user reads the contents of the SSPBUF before the falling edge of the ninth clock, thus clearing the BF bit, the CKP bit will not be cleared and clock stretching will not occur.

2: The CKP bit can be set in software, regardless of the state of the BF bit. The user should be careful to clear the BF bit in the ISR before the next receive sequence, in order to prevent an overflow condition.

17.4.4.2 Clock Stretching for 10-bit Slave Receive Mode (SEN = 1)

In 10-bit Slave Receive mode, during the address sequence, clock stretching automatically takes place but CKP is not cleared. During this time, if the UA bit is set after the ninth clock, clock stretching is initiated. The UA bit is set after receiving the upper byte of the 10-bit address, and following the receive of the second byte of the 10-bit address with the R/$\overline{W}$ bit cleared to '0'. The release of the clock line occurs upon updating SSPADD. Clock stretching will occur on each data receive sequence as described in 7-bit mode.

Note: If the user polls the UA bit and clears it by updating the SSPADD register before the falling edge of the ninth clock occurs, and if the user hasn't cleared the BF bit by reading the SSPBUF register before that time, then the CKP bit will still NOT be asserted low. Clock stretching on the basis of the state of the BF bit only occurs during a data sequence, not an address sequence.

17.4.4.3 Clock Stretching for 7-bit Slave Transmit Mode

7-bit Slave Transmit mode implements clock stretching by clearing the CKP bit after the falling edge of the ninth clock, if the BF bit is clear. This occurs, regardless of the state of the SEN bit.

The user's ISR must set the CKP bit before transmission is allowed to continue. By holding the SCL line low, the user has time to service the ISR and load the contents of the SSPBUF before the master device can initiate another transmit sequence (see Figure 17-9).

Note 1: If the user loads the contents of SSPBUF, setting the BF bit before the falling edge of the ninth clock, the CKP bit will not be cleared and clock stretching will not occur.

2: The CKP bit can be set in software, regardless of the state of the BF bit.

17.4.4.4 Clock Stretching for 10-bit Slave Transmit Mode

In 10-bit Slave Transmit mode, clock stretching is controlled during the first two address sequences by the state of the UA bit, just as it is in 10-bit Slave Receive mode. The first two addresses are followed by a third address sequence, which contains the high order bits of the 10-bit address and the R/$\overline{W}$ bit set to '1'. After the third address sequence is performed, the UA bit is not set, the module is now configured in Transmit mode, and clock stretching is controlled by the BF flag, as in 7-bit Slave Transmit mode (see Figure 17-11).

© 2003 Microchip Technology Inc.

17.4.4.5 Clock Synchronization and the CKP bit

If a user clears the CKP bit, the SCL output is forced to '0'. Setting the CKP bit will not assert the SCL output low until the SCL output is already sampled low. If the user attempts to drive SCL low, the CKP bit will not assert the SCL line until an external I^2C master device has already asserted the SCL line. The SCL output will remain low until the CKP bit is set, and all other devices on the I^2C bus have de-asserted SCL. This ensures that a write to the CKP bit will not violate the minimum high time requirement for SCL (see Figure 17-12).

FIGURE 17-12: CLOCK SYNCHRONIZATION TIMING

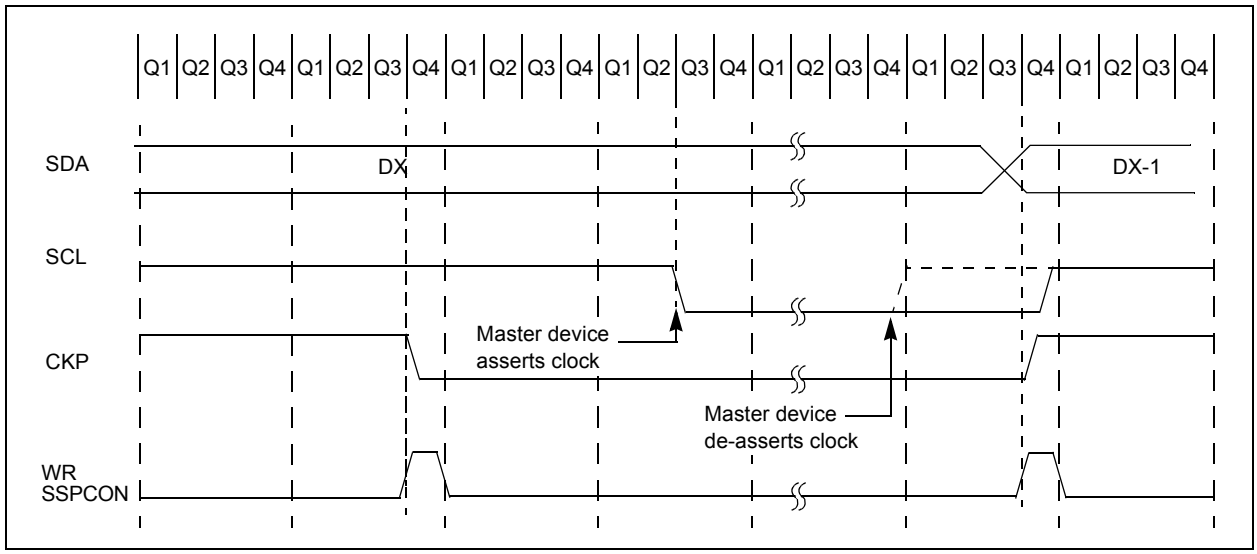

FIGURE 17-13: I^2C SLAVE MODE TIMING WITH SEN = 1 (RECEPTION, 7-BIT ADDRESS)

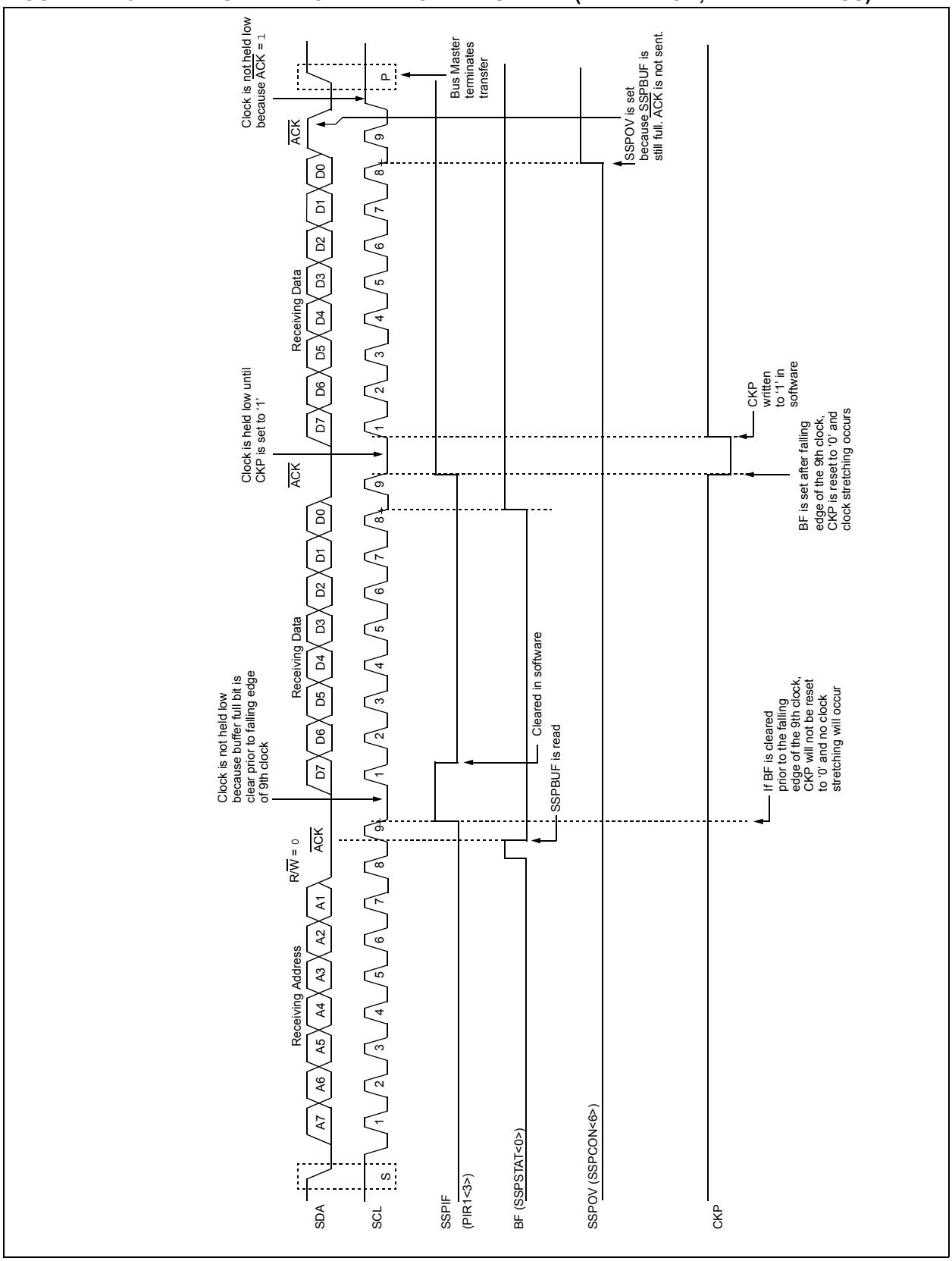

© 2003 Microchip Technology Inc.

FIGURE 17-14: I²C SLAVE MODE TIMING SEN = 1 (RECEPTION, 10-BIT ADDRESS)

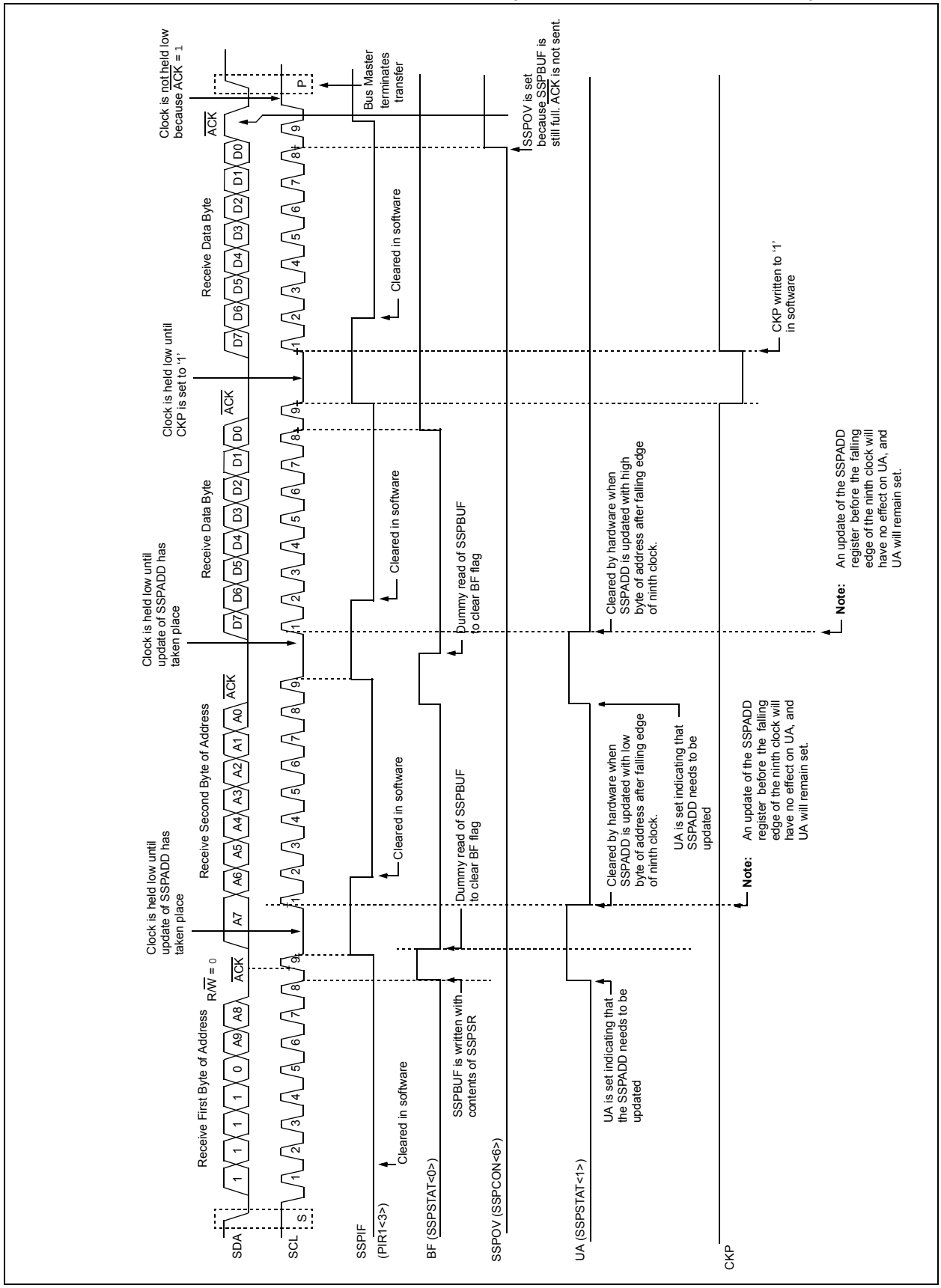

17.4.5 GENERAL CALL ADDRESS SUPPORT

The addressing procedure for the I^2C bus is such that the first byte after the START condition usually determines which device will be the slave addressed by the master. The exception is the general call address, which can address all devices. When this address is used, all devices should, in theory, respond with an Acknowledge.

The general call address is one of eight addresses reserved for specific purposes by the I^2C protocol. It consists of all '0's with R/$\overline{W}$ = 0.

The general call address is recognized when the General Call Enable bit (GCEN) is enabled (SSPCON2<7> set). Following a START bit detect, 8-bits are shifted into the SSPSR and the address is compared against the SSPADD. It is also compared to the general call address and fixed in hardware.

If the general call address matches, the SSPSR is transferred to the SSPBUF, the BF flag bit is set (eighth bit), and on the falling edge of the ninth bit ($\overline{ACK}$ bit), the SSPIF interrupt flag bit is set.

When the interrupt is serviced, the source for the interrupt can be checked by reading the contents of the SSPBUF. The value can be used to determine if the address was device specific or a general call address.

In 10-bit mode, the SSPADD is required to be updated for the second half of the address to match, and the UA bit is set (SSPSTAT<1>). If the general call address is sampled when the GCEN bit is set, while the slave is configured in 10-bit Address mode, then the second half of the address is not necessary, the UA bit will not be set, and the slave will begin receiving data after the Acknowledge (Figure 17-15).

FIGURE 17-15: SLAVE MODE GENERAL CALL ADDRESS SEQUENCE (7 OR 10-BIT ADDRESS MODE)

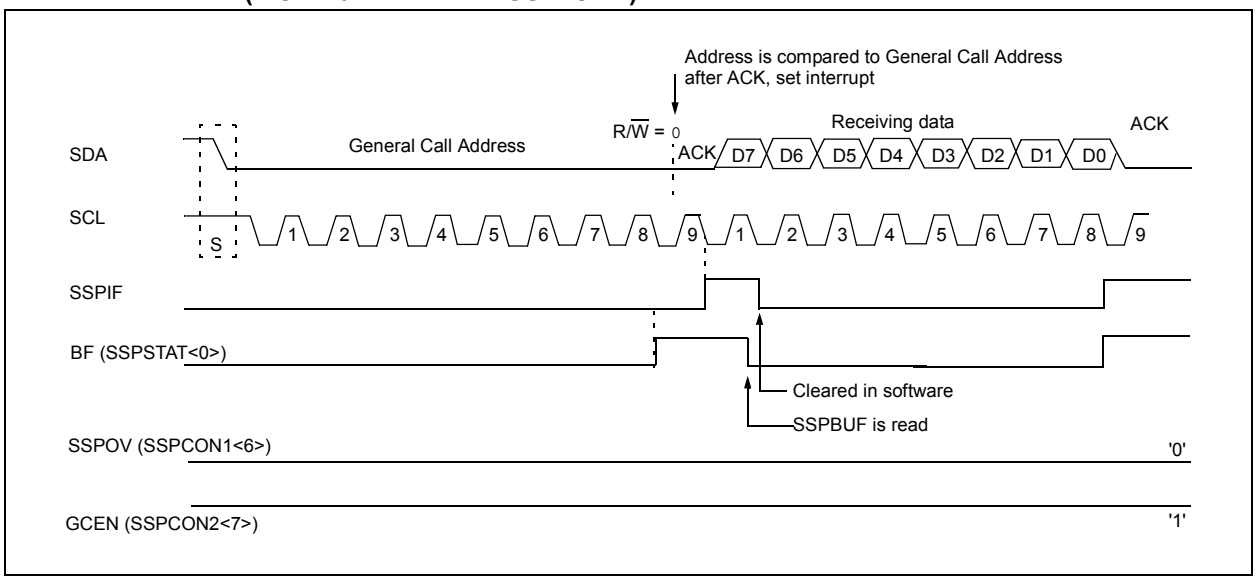

© 2003 Microchip Technology Inc.

17.4.6 MASTER MODE

Master mode is enabled by setting and clearing the appropriate SSPM bits in SSPCON1 and by setting the SSPEN bit. In Master mode, the SCL and SDA lines are manipulated by the MSSP hardware.

Master mode of operation is supported by interrupt generation on the detection of the START and STOP conditions. The STOP (P) and START (S) bits are cleared from a RESET, or when the MSSP module is disabled. Control of the I^2C bus may be taken when the P bit is set or the bus is IDLE, with both the S and P bits clear.

In Firmware Controlled Master mode, user code conducts all I^2C bus operations based on START and STOP bit conditions.

Once Master mode is enabled, the user has six options.

1. Assert a START condition on SDA and SCL.
2. Assert a Repeated START condition on SDA and SCL.
3. Write to the SSPBUF register initiating transmission of data/address.
4. Configure the I^2C port to receive data.
5. Generate an Acknowledge condition at the end of a received byte of data.
6. Generate a STOP condition on SDA and SCL.

Note: The MSSP module, when configured in I^2C Master mode, does not allow queueing of events. For instance, the user is not allowed to initiate a START condition and immediately write the SSPBUF register to initiate transmission before the START condition is complete. In this case, the SSPBUF will not be written to and the WCOL bit will be set, indicating that a write to the SSPBUF did not occur.

The following events will cause SSP interrupt flag bit, SSPIF, to be set (SSP interrupt if enabled):

- START condition
- STOP condition
- Data transfer byte transmitted/received
- Acknowledge Transmit
- Repeated START

FIGURE 17-16: MSSP BLOCK DIAGRAM (I^2C MASTER MODE)

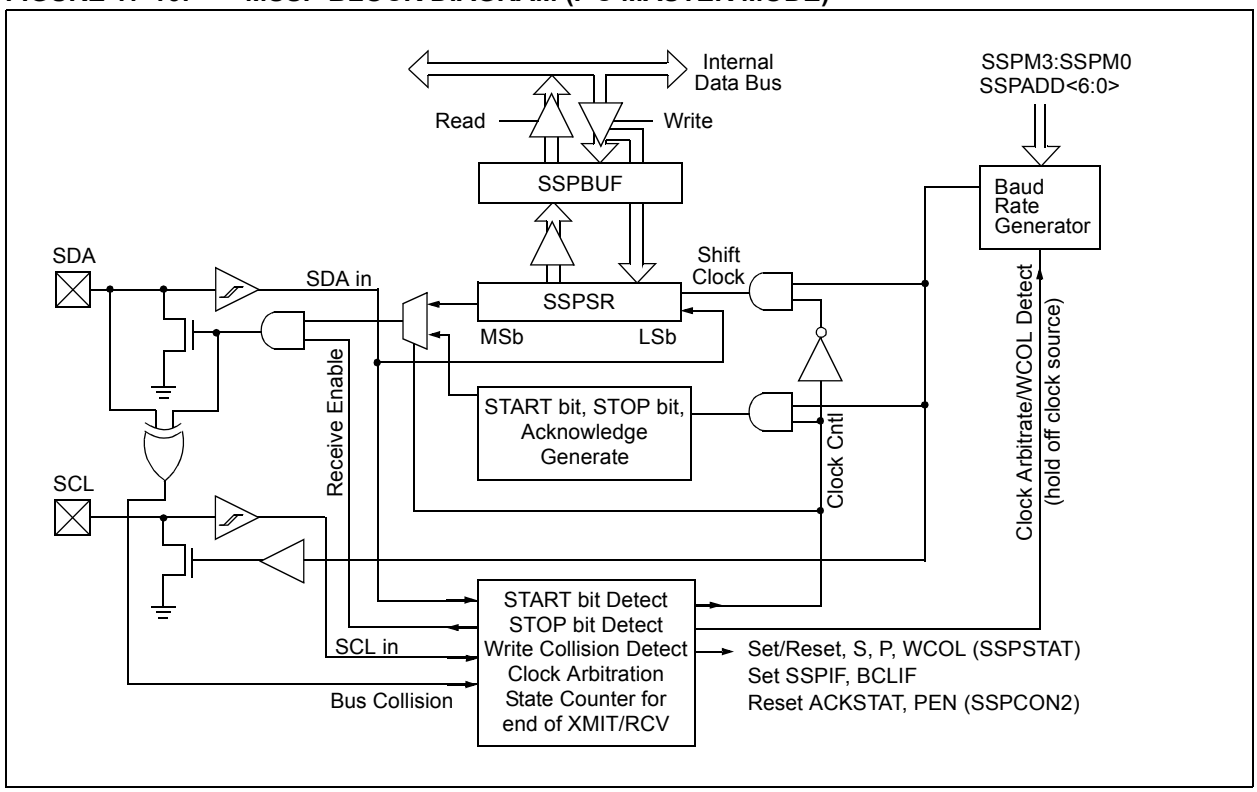

17.4.6.1 I^2C Master Mode Operation

The master device generates all of the serial clock pulses and the START and STOP conditions. A transfer is ended with a STOP condition, or with a Repeated START condition. Since the Repeated START condition is also the beginning of the next serial transfer, the I^2C bus will not be released.

In Master Transmitter mode, serial data is output through SDA, while SCL outputs the serial clock. The first byte transmitted contains the slave address of the receiving device (7 bits) and the Read/Write (R/$\overline{W}$) bit. In this case, the R/$\overline{W}$ bit will be logic '0'. Serial data is transmitted 8 bits at a time. After each byte is transmitted, an Acknowledge bit is received. START and STOP conditions are output to indicate the beginning and the end of a serial transfer.

In Master Receive mode, the first byte transmitted contains the slave address of the transmitting device (7 bits) and the R/$\overline{W}$ bit. In this case, the R/$\overline{W}$ bit will be logic '1'. Thus, the first byte transmitted is a 7-bit slave address followed by a '1' to indicate receive bit. Serial data is received via SDA, while SCL outputs the serial clock. Serial data is received 8 bits at a time. After each byte is received, an Acknowledge bit is transmitted. START and STOP conditions indicate the beginning and end of transmission.

The baud rate generator used for the SPI mode operation is used to set the SCL clock frequency for either 100 kHz, 400 kHz, or 1 MHz I^2C operation. See Section 17.4.7, Baud Rate Generator for more details.

A typical transmit sequence would go as follows:

1. The user generates a START condition by setting the START enable bit, SEN (SSPCON2<0>).
2. SSPIF is set. The MSSP module will wait the required start time before any other operation takes place.
3. The user loads the SSPBUF with the slave address to transmit.
4. Address is shifted out the SDA pin until all 8 bits are transmitted.
5. The MSSP module shifts in the ACK bit from the slave device and writes its value into the SSPCON2 register (SSPCON2<6>).
6. The MSSP module generates an interrupt at the end of the ninth clock cycle by setting the SSPIF bit.
7. The user loads the SSPBUF with eight bits of data.
8. Data is shifted out the SDA pin until all 8 bits are transmitted.
9. The MSSP module shifts in the ACK bit from the slave device and writes its value into the SSPCON2 register (SSPCON2<6>).
10. The MSSP module generates an interrupt at the end of the ninth clock cycle by setting the SSPIF bit.
11. The user generates a STOP condition by setting the STOP enable bit PEN (SSPCON2<2>).
12. Interrupt is generated once the STOP condition is complete.

© 2003 Microchip Technology Inc.

17.4.7 BAUD RATE GENERATOR

In I^2C Master mode, the baud rate generator (BRG) reload value is placed in the lower 7 bits of the SSPADD register (Figure 17-17). When a write occurs to SSPBUF, the baud rate generator will automatically begin counting. The BRG counts down to '0' and stops until another reload has taken place. The BRG count is decremented twice per instruction cycle (TCY) on the Q2 and Q4 clocks. In I^2C Master mode, the BRG is reloaded automatically.

Once the given operation is complete (i.e., transmission of the last data bit is followed by $\overline{ACK}$), the internal clock will automatically stop counting and the SCL pin will remain in its last state.

Table 17-3 demonstrates clock rates based on instruction cycles and the BRG value loaded into SSPADD.

FIGURE 17-17: BAUD RATE GENERATOR BLOCK DIAGRAM

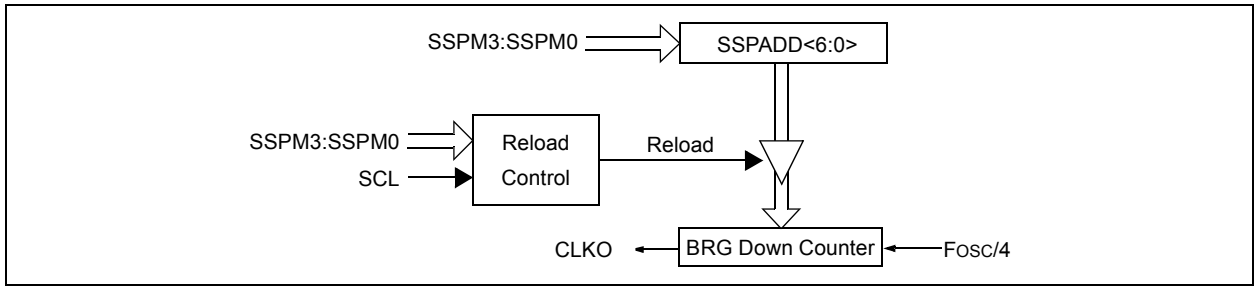

TABLE 17-3: I^2C CLOCK RATE W/BRG

FCY	FCY*2	BRG Value	FSCL(2) (2 Rollovers of BRG)
10 MHz	20 MHz	19h	400 kHz(1)
10 MHz	20 MHz	20h	312.5 kHz
10 MHz	20 MHz	3Fh	100 kHz
4 MHz	8 MHz	0Ah	400 kHz(1)
4 MHz	8 MHz	0Dh	308 kHz
4 MHz	8 MHz	28h	100 kHz
1 MHz	2 MHz	03h	333 kHz(1)
1 MHz	2 MHz	0Ah	100kHz
1 MHz	2 MHz	00h	1 MHz(1)

Note 1: The I^2C interface does not conform to the 400 kHz I^2C specification (which applies to rates greater than 100 kHz) in all details, but may be used with care where higher rates are required by the application.

2: Actual frequency will depend on bus conditions.

17.4.7.1 Clock Arbitration

Clock arbitration occurs when the master, during any receive, transmit or Repeated START/STOP condition, de-asserts the SCL pin (SCL allowed to float high). When the SCL pin is allowed to float high, the baud rate generator (BRG) is suspended from counting until the SCL pin is actually sampled high. When the SCL pin is sampled high, the baud rate generator is reloaded with the contents of SSPADD<6:0> and begins counting. This ensures that the SCL high time will always be at least one BRG rollover count, in the event that the clock is held low by an external device (Figure 17-18).

FIGURE 17-18: BAUD RATE GENERATOR TIMING WITH CLOCK ARBITRATION

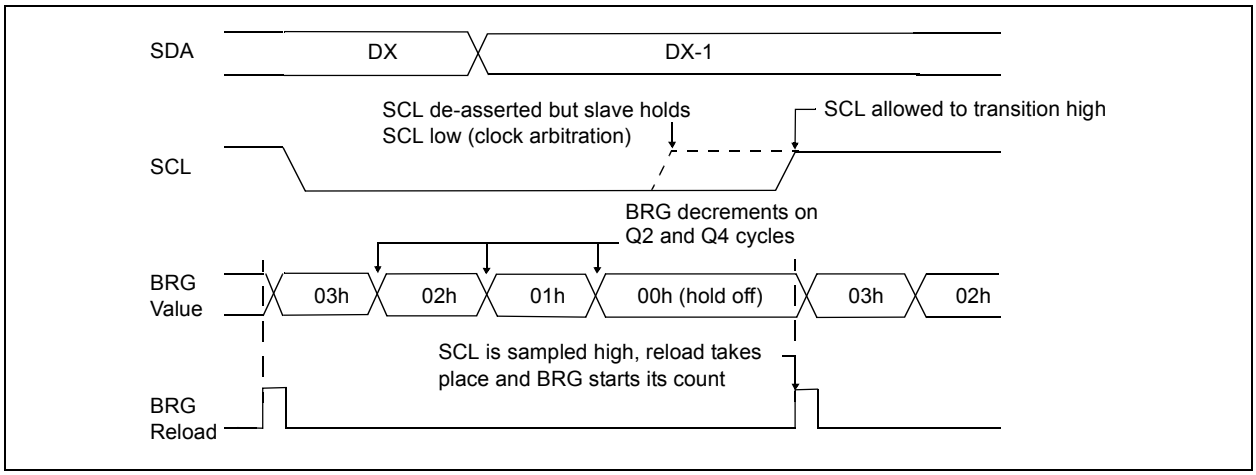

© 2003 Microchip Technology Inc.

17.4.8 I²C MASTER MODE START CONDITION TIMING

To initiate a START condition, the user sets the START condition enable bit, SEN (SSPCON2<0>). If the SDA and SCL pins are sampled high, the baud rate generator is reloaded with the contents of SSPADD<6:0> and starts its count. If SCL and SDA are both sampled high when the baud rate generator times out (TBRG), the SDA pin is driven low. The action of the SDA being driven low, while SCL is high, is the START condition and causes the S bit (SSPSTAT<3>) to be set. Following this, the baud rate generator is reloaded with the contents of SSPADD<6:0> and resumes its count. When the baud rate generator times out (TBRG), the SEN bit (SSPCON2<0>) will be automatically cleared by hardware, the baud rate generator is suspended, leaving the SDA line held low and the START condition is complete.

Note:	If, at the beginning of the START condition, the SDA and SCL pins are already sampled low, or if during the START condition, the SCL line is sampled low before the SDA line is driven low, a bus collision occurs; the Bus Collision Interrupt Flag, BCLIF is set, the START condition is aborted, and the I²C module is reset into its IDLE state.

17.4.8.1 WCOL Status Flag

If the user writes the SSPBUF when a START sequence is in progress, the WCOL is set and the contents of the buffer are unchanged (the write doesn't occur).

Note:	Because queueing of events is not allowed, writing to the lower 5 bits of SSPCON2 is disabled until the START condition is complete.

FIGURE 17-19: FIRST START BIT TIMING

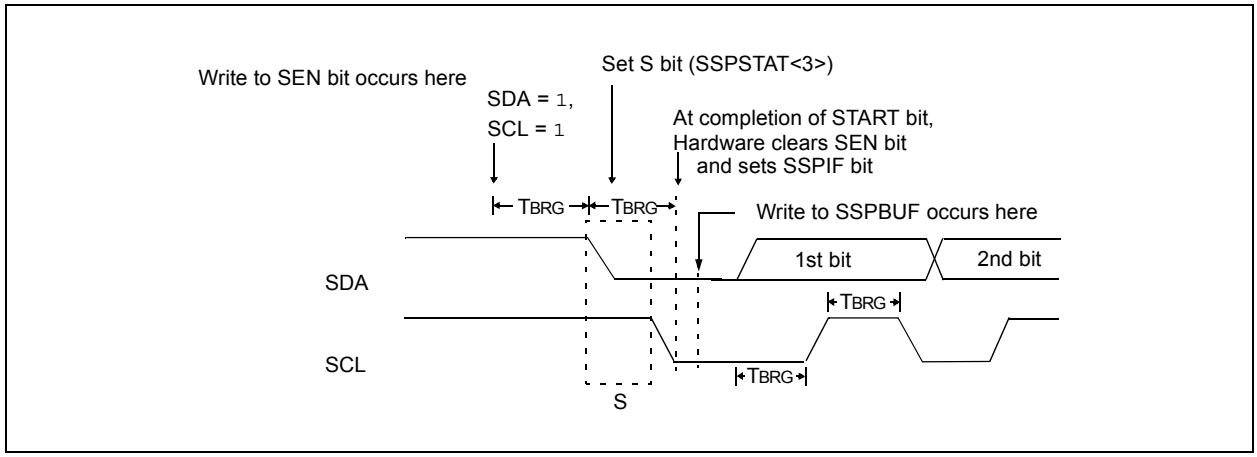

17.4.9 I²C MASTER MODE REPEATED START CONDITION TIMING

A Repeated START condition occurs when the RSEN bit (SSPCON2<1>) is programmed high and the I²C logic module is in the IDLE state. When the RSEN bit is set, the SCL pin is asserted low. When the SCL pin is sampled low, the baud rate generator is loaded with the contents of SSPADD<5:0> and begins counting. The SDA pin is released (brought high) for one baud rate generator count (TBRG). When the baud rate generator times out, if SDA is sampled high, the SCL pin will be de-asserted (brought high). When SCL is sampled high, the baud rate generator is reloaded with the contents of SSPADD<6:0> and begins counting. SDA and SCL must be sampled high for one TBRG. This action is then followed by assertion of the SDA pin (SDA = 0) for one TBRG, while SCL is high. Following this, the RSEN bit (SSPCON2<1>) will be automatically cleared and the baud rate generator will not be reloaded, leaving the SDA pin held low. As soon as a START condition is detected on the SDA and SCL pins, the S bit (SSPSTAT<3>) will be set. The SSPIF bit will not be set until the baud rate generator has timed out.

Note 1: If RSEN is programmed while any other event is in progress, it will not take effect.

2: A bus collision during the Repeated START condition occurs if:

- SDA is sampled low when SCL goes from low to high.
- SCL goes low before SDA is asserted low. This may indicate that another master is attempting to transmit a data '1'.

Immediately following the SSPIF bit getting set, the user may write the SSPBUF with the 7-bit address in 7-bit mode, or the default first address in 10-bit mode. After the first eight bits are transmitted and an ACK is received, the user may then transmit an additional eight bits of address (10-bit mode), or eight bits of data (7-bit mode).

17.4.9.1 WCOL Status Flag

If the user writes the SSPBUF when a Repeated START sequence is in progress, the WCOL is set and the contents of the buffer are unchanged (the write doesn't occur).

Note: Because queueing of events is not allowed, writing of the lower 5 bits of SSPCON2 is disabled until the Repeated START condition is complete.

FIGURE 17-20: REPEAT START CONDITION WAVEFORM

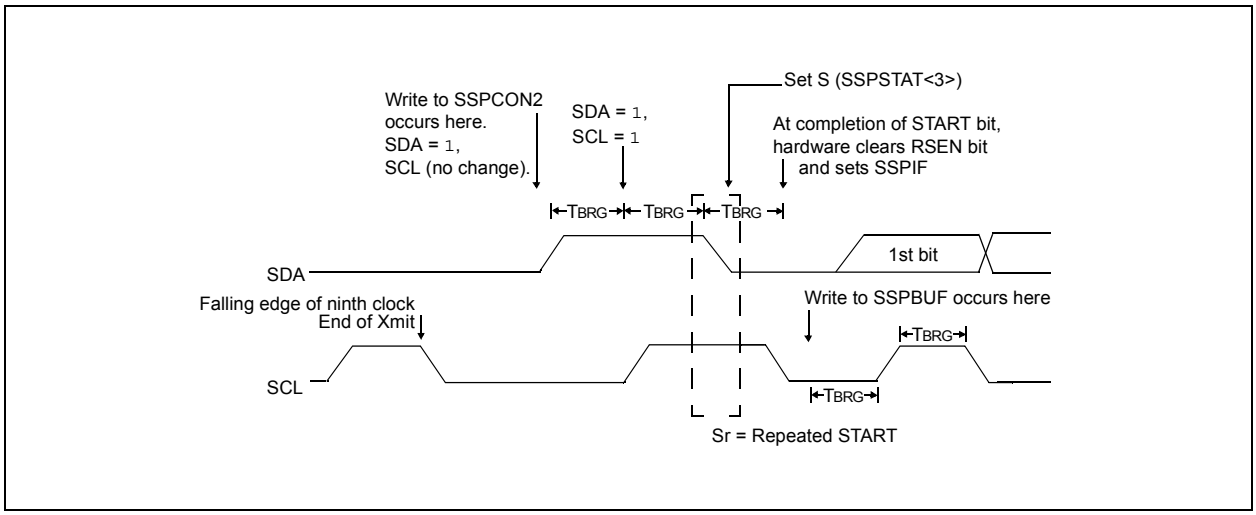

© 2003 Microchip Technology Inc.

17.4.10 I²C MASTER MODE TRANSMISSION

Transmission of a data byte, a 7-bit address, or the other half of a 10-bit address is accomplished by simply writing a value to the SSPBUF register. This action will set the buffer full flag bit, BF, and allow the baud rate generator to begin counting and start the next transmission. Each bit of address/data will be shifted out onto the SDA pin after the falling edge of SCL is asserted (see data hold time specification parameter 106). SCL is held low for one baud rate generator rollover count (TBRG). Data should be valid before SCL is released high (see data setup time specification parameter 107). When the SCL pin is released high, it is held that way for TBRG. The data on the SDA pin must remain stable for that duration and some hold time after the next falling edge of SCL. After the eighth bit is shifted out (the falling edge of the eighth clock), the BF flag is cleared and the master releases SDA. This allows the slave device being addressed to respond with an $\overline{ACK}$ bit during the ninth bit time, if an address match occurred, or if data was received properly. The status of $\overline{ACK}$ is written into the ACKDT bit on the falling edge of the ninth clock. If the master receives an Acknowledge, the Acknowledge status bit, ACKSTAT, is cleared. If not, the bit is set. After the ninth clock, the SSPIF bit is set and the master clock (baud rate generator) is suspended until the next data byte is loaded into the SSPBUF, leaving SCL low and SDA unchanged (Figure 17-21).

After the write to the SSPBUF, each bit of address will be shifted out on the falling edge of SCL, until all seven address bits and the R/$\overline{W}$ bit are completed. On the falling edge of the eighth clock, the master will de-assert the SDA pin, allowing the slave to respond with an Acknowledge. On the falling edge of the ninth clock, the master will sample the SDA pin to see if the address was recognized by a slave. The status of the ACK bit is loaded into the ACKSTAT status bit (SSPCON2<6>). Following the falling edge of the ninth clock transmission of the address, the SSPIF bit is set, the BF flag is cleared and the baud rate generator is turned off until another write to the SSPBUF takes place, holding SCL low and allowing SDA to float.

17.4.10.1 BF Status Flag

In Transmit mode, the BF bit (SSPSTAT<0>) is set when the CPU writes to SSPBUF and is cleared when all 8 bits are shifted out.

17.4.10.2 WCOL Status Flag

If the user writes the SSPBUF when a transmit is already in progress (i.e., SSPSR is still shifting out a data byte), the WCOL is set and the contents of the buffer are unchanged (the write doesn't occur).

WCOL must be cleared in software.

17.4.10.3 ACKSTAT Status Flag

In Transmit mode, the ACKSTAT bit (SSPCON2<6>) is cleared when the slave has sent an Acknowledge ($\overline{ACK}$ = 0), and is set when the slave does not Acknowledge ($\overline{ACK}$ = 1). A slave sends an Acknowledge when it has recognized its address (including a general call), or when the slave has properly received its data.

17.4.11 I²C MASTER MODE RECEPTION

Master mode reception is enabled by programming the receive enable bit, RCEN (SSPCON2<3>).

Note:	The RCEN bit should be set after $\overline{ACK}$ sequence is complete, or the RCEN bit will be disregarded.

The baud rate generator begins counting, and on each rollover, the state of the SCL pin changes (high to low/low to high) and data is shifted into the SSPSR. After the falling edge of the eighth clock, the receive enable flag is automatically cleared, the contents of the SSPSR are loaded into the SSPBUF, the BF flag bit is set, the SSPIF flag bit is set and the baud rate generator is suspended from counting, holding SCL low. The MSSP is now in IDLE state, awaiting the next command. When the buffer is read by the CPU, the BF flag bit is automatically cleared. The user can then send an Acknowledge bit at the end of reception, by setting the Acknowledge sequence enable bit, ACKEN (SSPCON2<4>).

17.4.11.1 BF Status Flag

In receive operation, the BF bit is set when an address or data byte is loaded into SSPBUF from SSPSR. It is cleared when the SSPBUF register is read.

17.4.11.2 SSPOV Status Flag

In receive operation, the SSPOV bit is set when 8 bits are received into the SSPSR and the BF flag bit is already set from a previous reception.

17.4.11.3 WCOL Status Flag

If the user writes the SSPBUF when a receive is already in progress (i.e., SSPSR is still shifting in a data byte), the WCOL bit is set and the contents of the buffer are unchanged (the write doesn't occur).

FIGURE 17-21: I²C MASTER MODE WAVEFORM (TRANSMISSION, 7 OR 10-BIT ADDRESS)

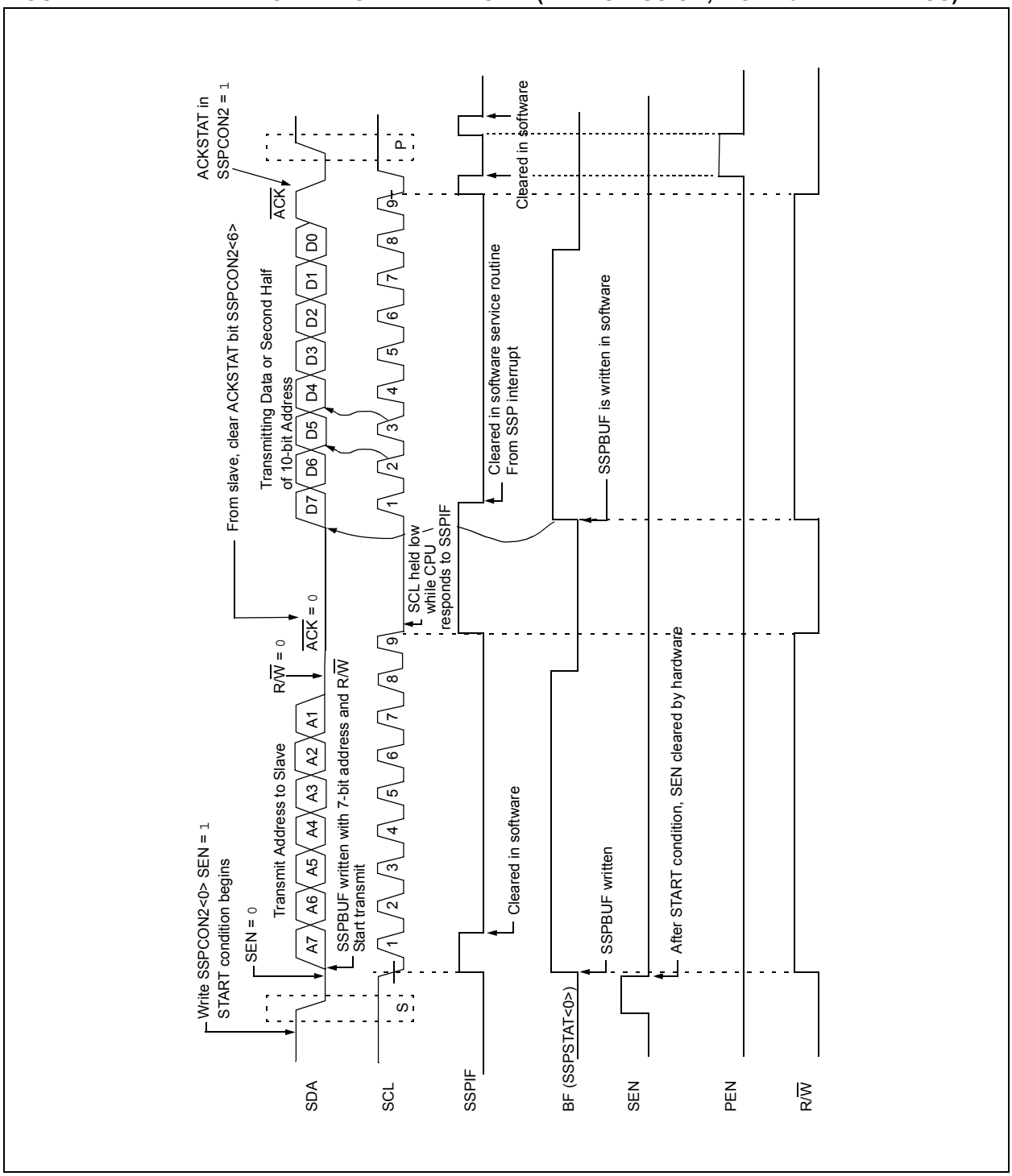

© 2003 Microchip Technology Inc.

FIGURE 17-22: I²C MASTER MODE WAVEFORM (RECEPTION, 7-BIT ADDRESS)

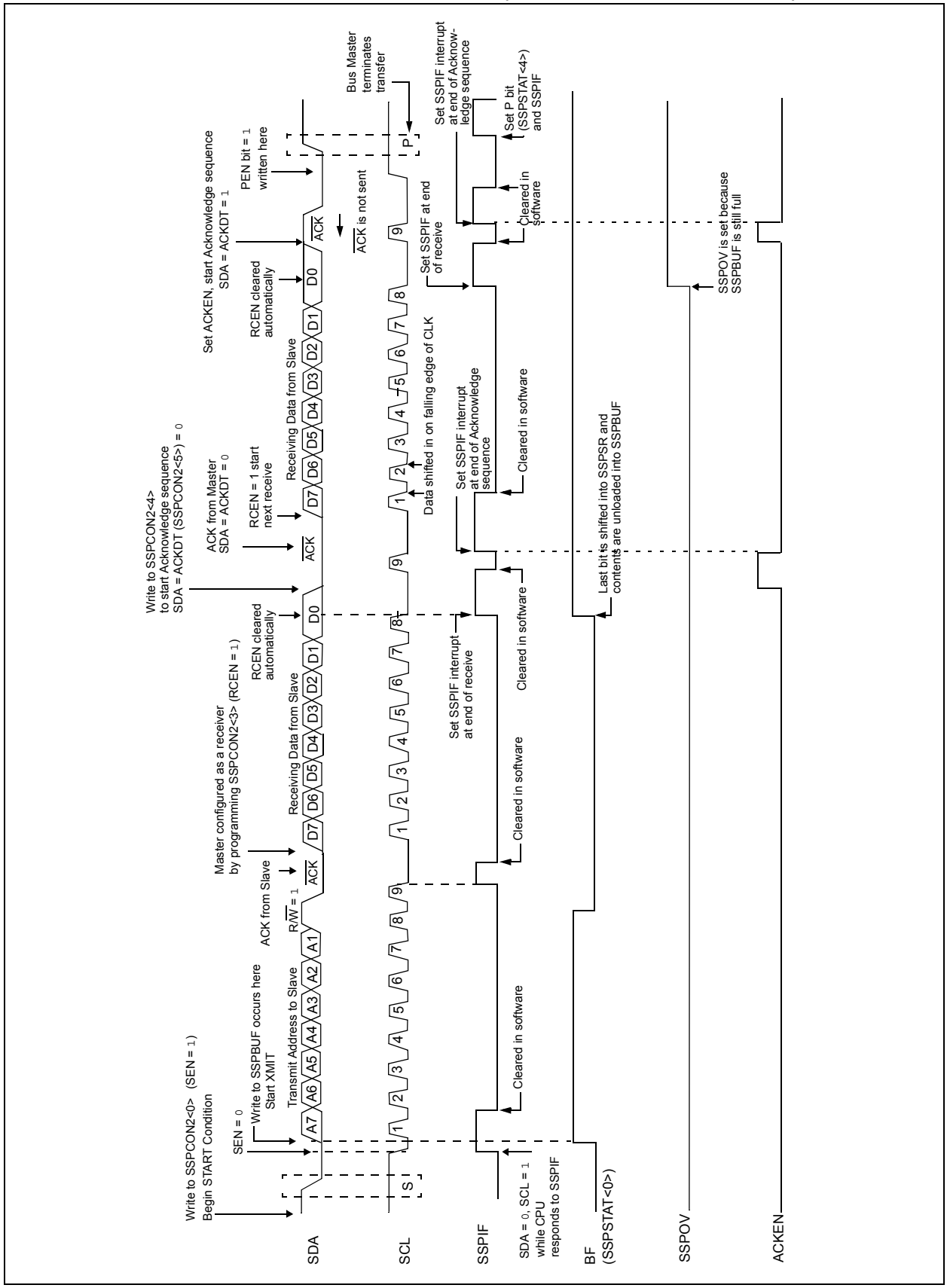

17.4.12 ACKNOWLEDGE SEQUENCE TIMING

An Acknowledge sequence is enabled by setting the Acknowledge sequence enable bit, ACKEN (SSPCON2<4>). When this bit is set, the SCL pin is pulled low and the contents of the Acknowledge data bit are presented on the SDA pin. If the user wishes to generate an Acknowledge, then the ACKDT bit should be cleared. If not, the user should set the ACKDT bit before starting an Acknowledge sequence. The baud rate generator then counts for one rollover period (TBRG) and the SCL pin is de-asserted (pulled high). When the SCL pin is sampled high (clock arbitration), the baud rate generator counts for TBRG. The SCL pin is then pulled low. Following this, the ACKEN bit is automatically cleared, the baud rate generator is turned off and the MSSP module then goes into IDLE mode (Figure 17-23).

17.4.12.1 WCOL Status Flag

If the user writes the SSPBUF when an Acknowledge sequence is in progress, then WCOL is set and the contents of the buffer are unchanged (the write doesn't occur).

17.4.13 STOP CONDITION TIMING

A STOP bit is asserted on the SDA pin at the end of a receive/transmit by setting the STOP sequence enable bit, PEN (SSPCON2<2>). At the end of a receive/transmit, the SCL line is held low after the falling edge of the ninth clock. When the PEN bit is set, the master will assert the SDA line low. When the SDA line is sampled low, the baud rate generator is reloaded and counts down to '0'. When the baud rate generator times out, the SCL pin will be brought high, and one TBRG (baud rate generator rollover count) later, the SDA pin will be de-asserted. When the SDA pin is sampled high while SCL is high, the P bit (SSPSTAT<4>) is set. A TBRG later, the PEN bit is cleared and the SSPIF bit is set (Figure 17-24).

17.4.13.1 WCOL Status Flag

If the user writes the SSPBUF when a STOP sequence is in progress, then the WCOL bit is set and the contents of the buffer are unchanged (the write doesn't occur).

FIGURE 17-23: ACKNOWLEDGE SEQUENCE WAVEFORM

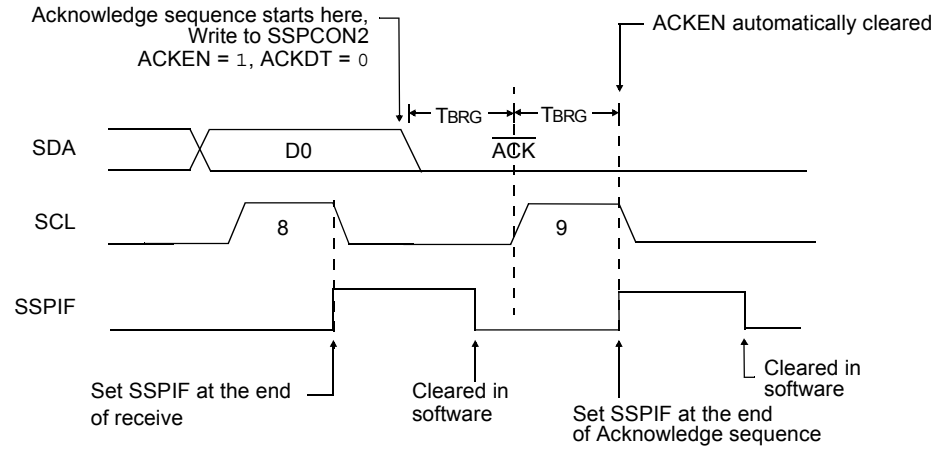

Note: TBRG = one baud rate generator period.

FIGURE 17-24: STOP CONDITION RECEIVE OR TRANSMIT MODE

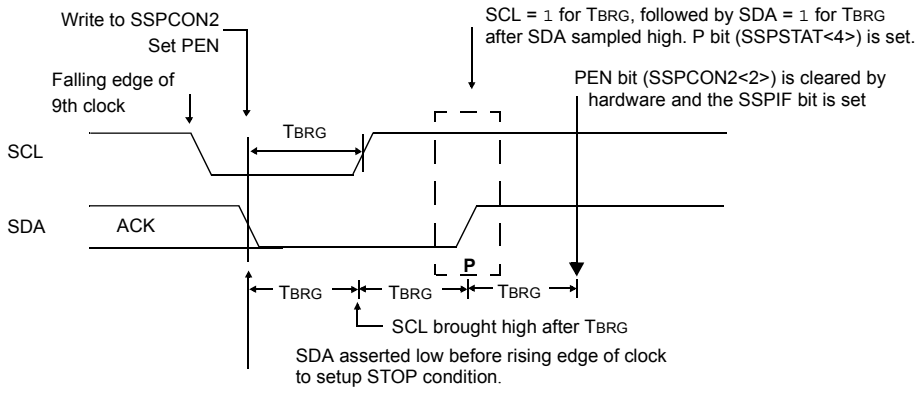

Note: TBRG = one baud rate generator period.

© 2003 Microchip Technology Inc.

17.4.14 SLEEP OPERATION

While in SLEEP mode, the I^2C module can receive addresses or data, and when an address match or complete byte transfer occurs, wake the processor from SLEEP (if the MSSP interrupt is enabled).

17.4.15 EFFECT OF A RESET

A RESET disables the MSSP module and terminates the current transfer.

17.4.16 MULTI-MASTER MODE

In Multi-Master mode, the interrupt generation on the detection of the START and STOP conditions allows the determination of when the bus is free. The STOP (P) and START (S) bits are cleared from a RESET, or when the MSSP module is disabled. Control of the I^2C bus may be taken when the P bit (SSPSTAT<4>) is set, or the bus is IDLE with both the S and P bits clear. When the bus is busy, enabling the SSP interrupt will generate the interrupt when the STOP condition occurs.

In multi-master operation, the SDA line must be monitored for arbitration, to see if the signal level is the expected output level. This check is performed in hardware, with the result placed in the BCLIF bit.

The states where arbitration can be lost are:

- Address Transfer
- Data Transfer
- A START Condition
- A Repeated START Condition
- An Acknowledge Condition

17.4.17 MULTI -MASTER COMMUNICATION, BUS COLLISION AND BUS ARBITRATION

Multi-Master mode support is achieved by bus arbitration. When the master outputs address/data bits onto the SDA pin, arbitration takes place when the master outputs a '1' on SDA, by letting SDA float high and another master asserts a '0'. When the SCL pin floats high, data should be stable. If the expected data on SDA is a '1' and the data sampled on the SDA pin = '0', then a bus collision has taken place. The master will set the Bus Collision Interrupt Flag, BCLIF, and reset the I^2C port to its IDLE state (Figure 17-25).

If a transmit was in progress when the bus collision occurred, the transmission is halted, the BF flag is cleared, the SDA and SCL lines are de-asserted and the SSPBUF can be written to. When the user services the bus collision Interrupt Service Routine, and if the I^2C bus is free, the user can resume communication by asserting a START condition.

If a START, Repeated START, STOP, or Acknowledge condition was in progress when the bus collision occurred, the condition is aborted, the SDA and SCL lines are de-asserted, and the respective control bits in the SSPCON2 register are cleared. When the user services the bus collision Interrupt Service Routine, and if the I^2C bus is free, the user can resume communication by asserting a START condition.

The master will continue to monitor the SDA and SCL pins. If a STOP condition occurs, the SSPIF bit will be set.

A write to the SSPBUF will start the transmission of data at the first data bit, regardless of where the transmitter left off when the bus collision occurred.

In Multi-Master mode, the interrupt generation on the detection of START and STOP conditions allows the determination of when the bus is free. Control of the I^2C bus can be taken when the P bit is set in the SSPSTAT register, or the bus is IDLE and the S and P bits are cleared.

FIGURE 17-25: BUS COLLISION TIMING FOR TRANSMIT AND ACKNOWLEDGE

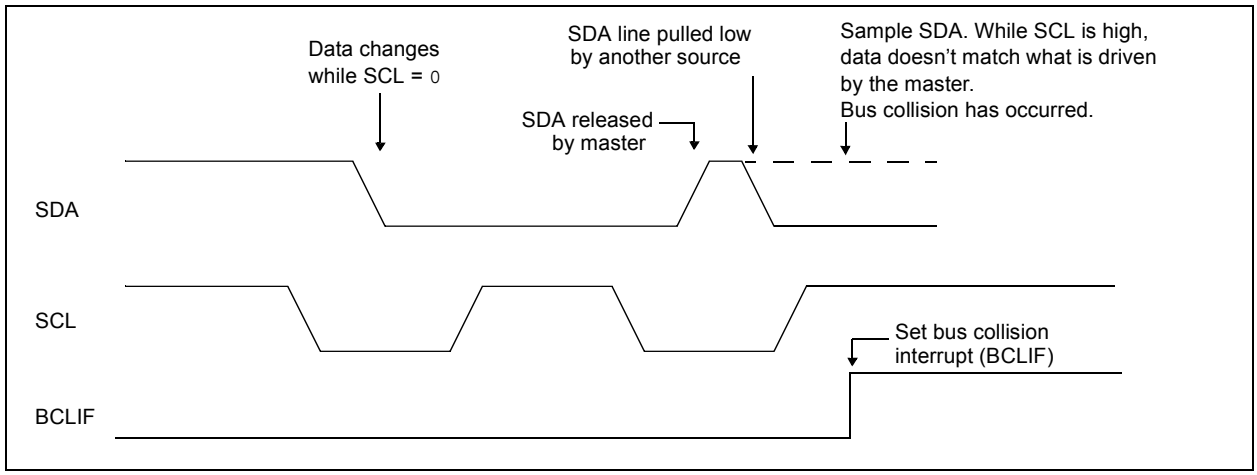

17.4.17.1 Bus Collision During a START Condition

During a START condition, a bus collision occurs if:

a) SDA or SCL are sampled low at the beginning of the START condition (Figure 17-26).

b) SCL is sampled low before SDA is asserted low (Figure 17-27).

During a START condition, both the SDA and the SCL pins are monitored.

If the SDA pin is already low, or the SCL pin is already low, then all of the following occur:

- the START condition is aborted,
- the BCLIF flag is set, and
- the MSSP module is reset to its IDLE state (Figure 17-26).

The START condition begins with the SDA and SCL pins de-asserted. When the SDA pin is sampled high, the baud rate generator is loaded from SSPADD<6:0> and counts down to ‘0’. If the SCL pin is sampled low while SDA is high, a bus collision occurs, because it is assumed that another master is attempting to drive a data '1' during the START condition.

If the SDA pin is sampled low during this count, the BRG is reset and the SDA line is asserted early (Figure 17-28). If, however, a '1' is sampled on the SDA pin, the SDA pin is asserted low at the end of the BRG count. The baud rate generator is then reloaded and counts down to ‘0’, and during this time, if the SCL pins are sampled as '0', a bus collision does not occur. At the end of the BRG count, the SCL pin is asserted low.

Note:	The reason that bus collision is not a factor during a START condition is that no two bus masters can assert a START condition at the exact same time. Therefore, one master will always assert SDA before the other. This condition does not cause a bus collision, because the two masters must be allowed to arbitrate the first address following the START condition. If the address is the same, arbitration must be allowed to continue into the data portion, Repeated START or STOP conditions.

FIGURE 17-26: BUS COLLISION DURING START CONDITION (SDA ONLY)

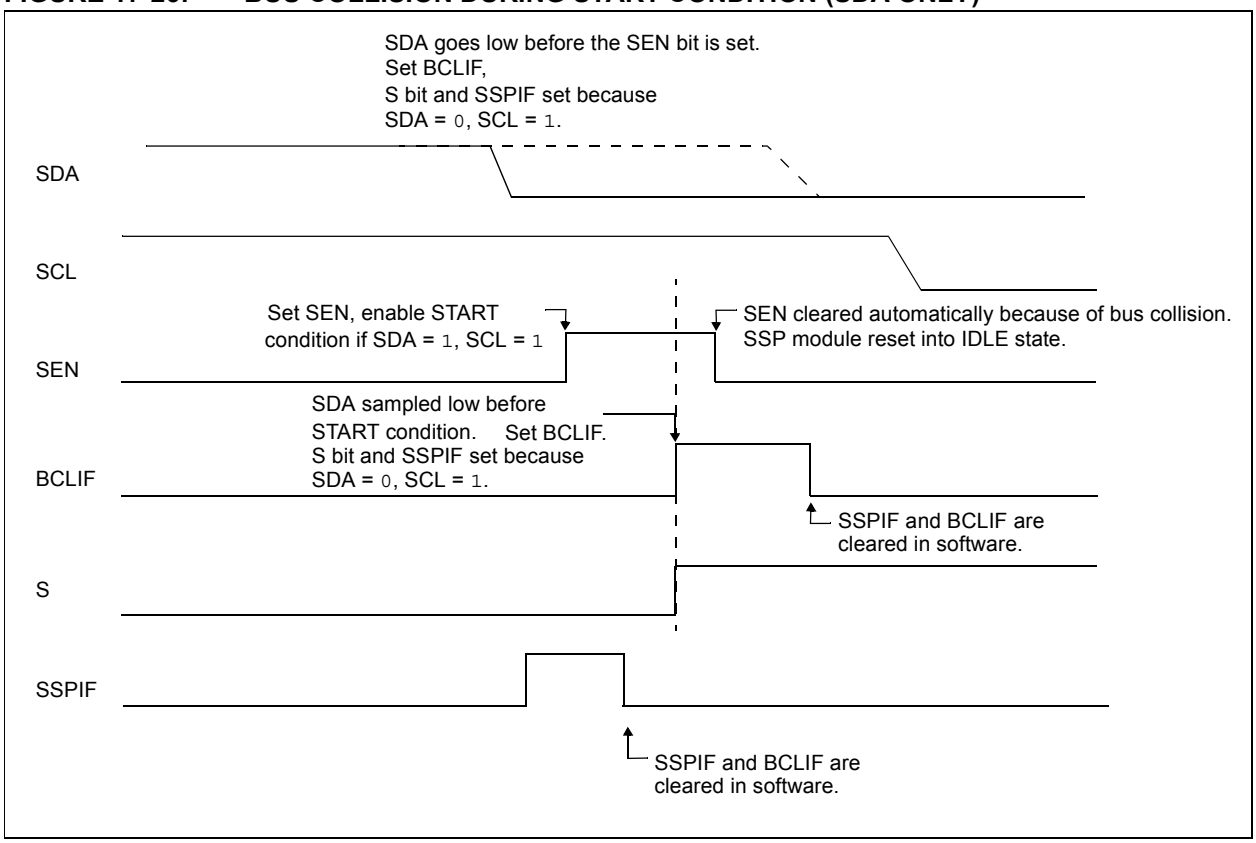

© 2003 Microchip Technology Inc.

FIGURE 17-27: BUS COLLISION DURING START CONDITION (SCL = 0)

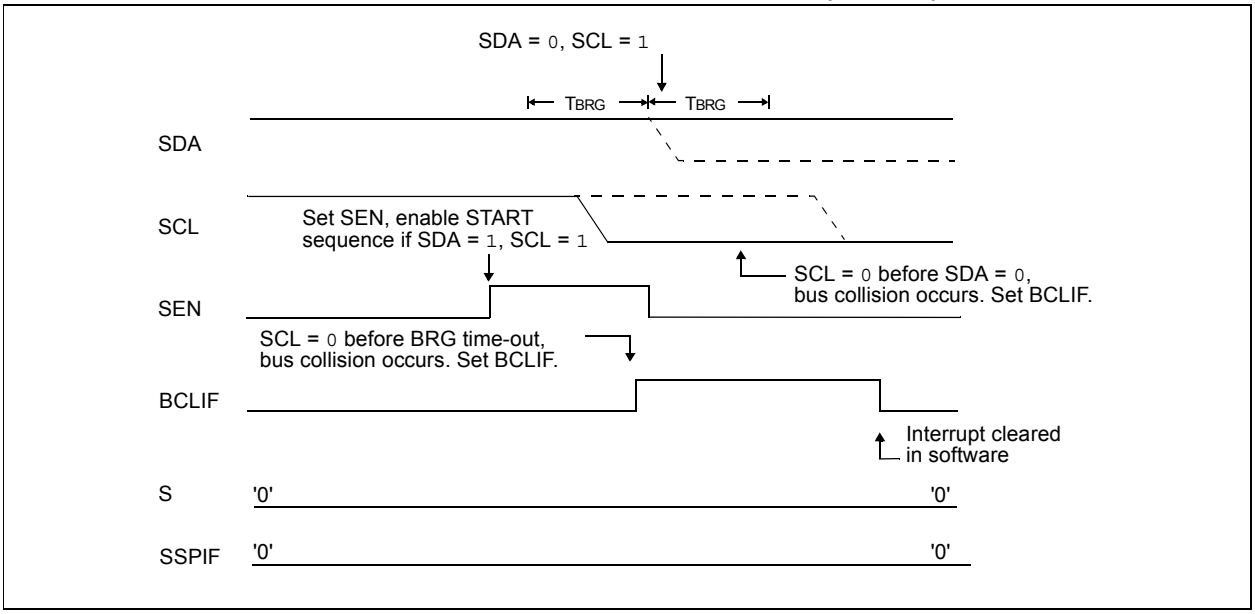

FIGURE 17-28: BRG RESET DUE TO SDA ARBITRATION DURING START CONDITION

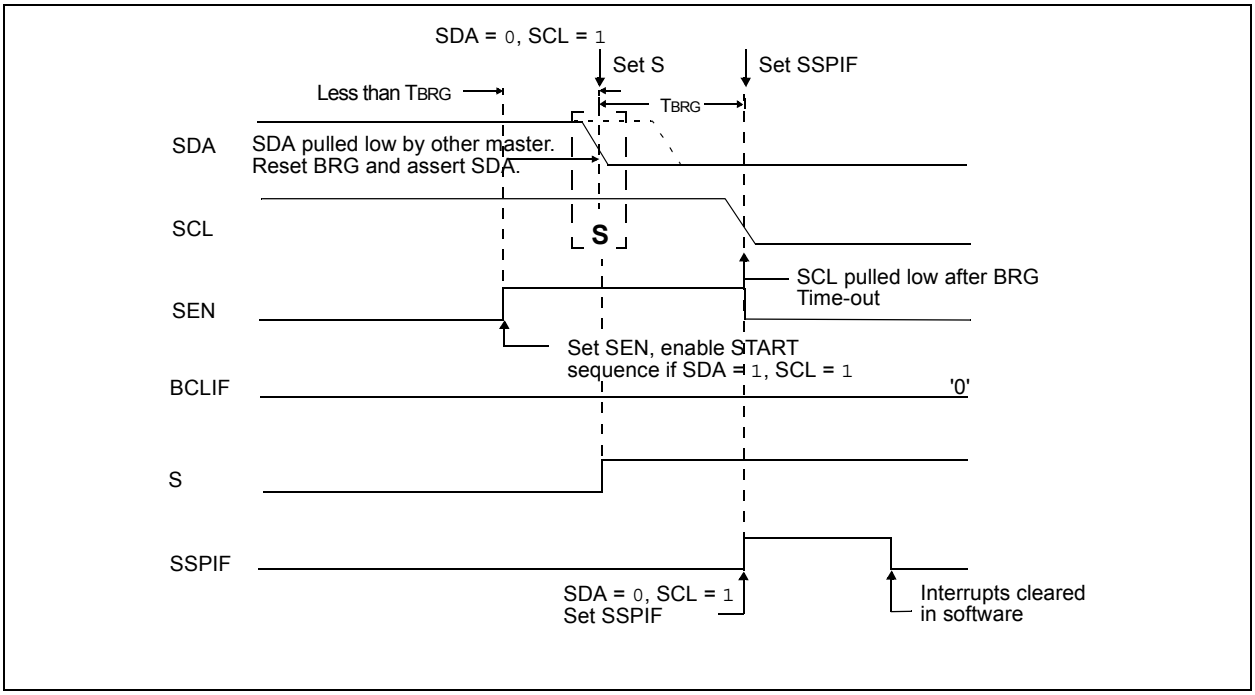

17.4.17.2 Bus Collision During a Repeated START Condition

During a Repeated START condition, a bus collision occurs if:

a) A low level is sampled on SDA when SCL goes from low level to high level.

b) SCL goes low before SDA is asserted low, indicating that another master is attempting to transmit a data ‘1’.

When the user de-asserts SDA and the pin is allowed to float high, the BRG is loaded with SSPADD<6:0> and counts down to ‘0’. The SCL pin is then de-asserted, and when sampled high, the SDA pin is sampled.

If SDA is low, a bus collision has occurred (i.e., another master is attempting to transmit a data ‘0’, Figure 17-29). If SDA is sampled high, the BRG is reloaded and begins counting. If SDA goes from high to low before the BRG times out, no bus collision occurs, because no two masters can assert SDA at exactly the same time.

If SCL goes from high to low before the BRG times out and SDA has not already been asserted, a bus collision occurs. In this case, another master is attempting to transmit a data ‘1’ during the Repeated START condition, Figure 17-30.

If, at the end of the BRG time-out, both SCL and SDA are still high, the SDA pin is driven low and the BRG is reloaded and begins counting. At the end of the count, regardless of the status of the SCL pin, the SCL pin is driven low and the Repeated START condition is complete.

FIGURE 17-29: BUS COLLISION DURING A REPEATED START CONDITION (CASE 1)

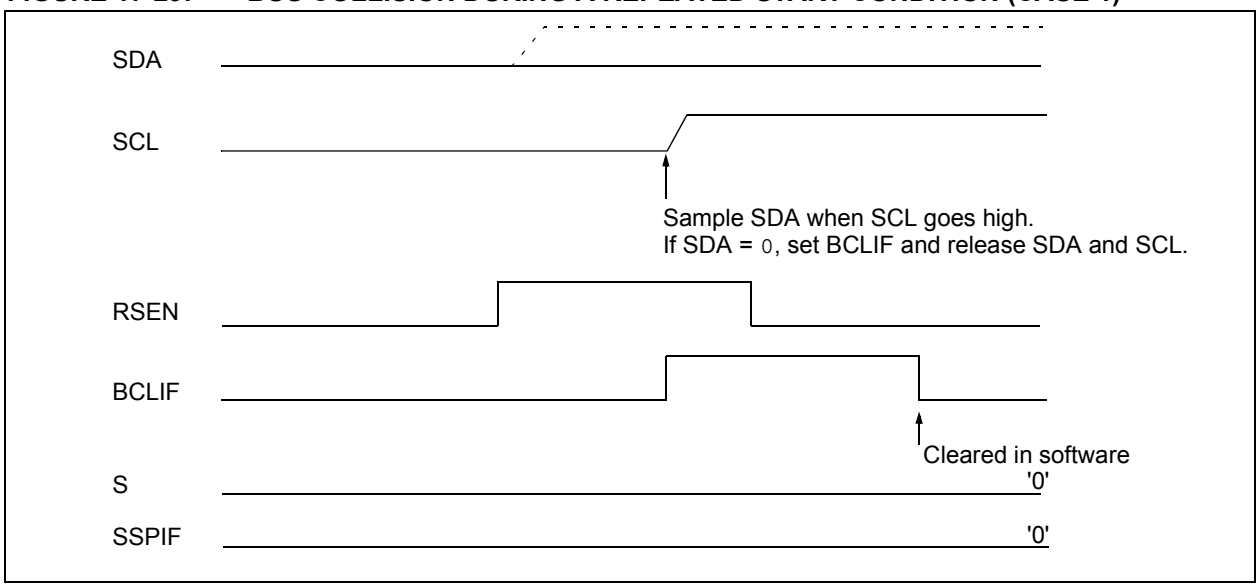

FIGURE 17-30: BUS COLLISION DURING REPEATED START CONDITION (CASE 2)

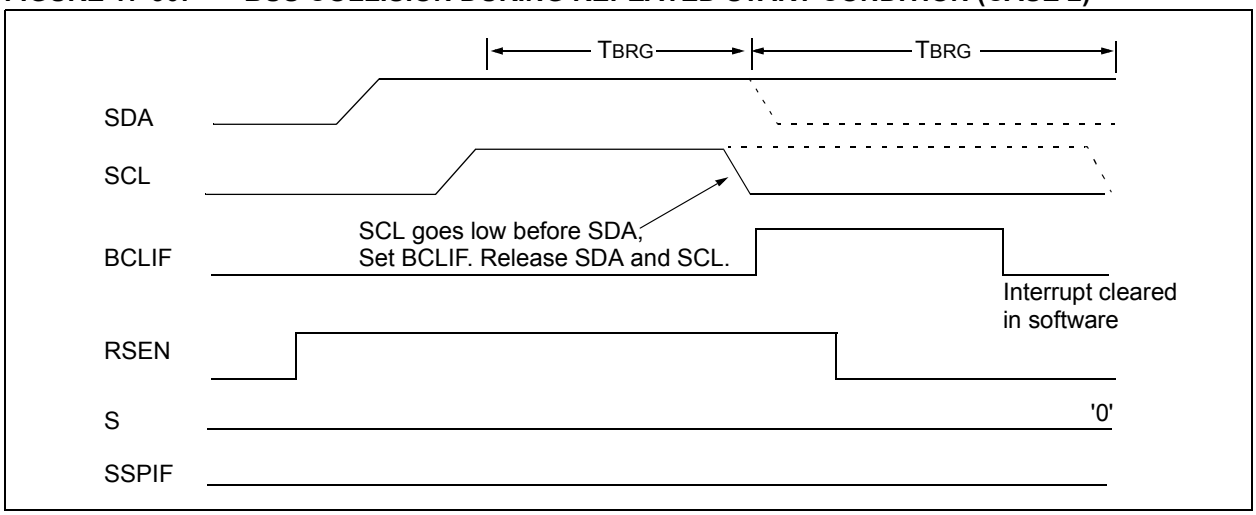

© 2003 Microchip Technology Inc.

17.4.17.3 Bus Collision During a STOP Condition

Bus collision occurs during a STOP condition if:

a) After the SDA pin has been de-asserted and allowed to float high, SDA is sampled low after the BRG has timed out.

b) After the SCL pin is de-asserted, SCL is sampled low before SDA goes high.

The STOP condition begins with SDA asserted low. When SDA is sampled low, the SCL pin is allowed to float. When the pin is sampled high (clock arbitration), the baud rate generator is loaded with SSPADD<6:0> and counts down to ‘0’. After the BRG times out, SDA is sampled. If SDA is sampled low, a bus collision has occurred. This is due to another master attempting to drive a data '0' (Figure 17-31). If the SCL pin is sampled low before SDA is allowed to float high, a bus collision occurs. This is another case of another master attempting to drive a data '0' (Figure 17-32).

FIGURE 17-31: BUS COLLISION DURING A STOP CONDITION (CASE 1)

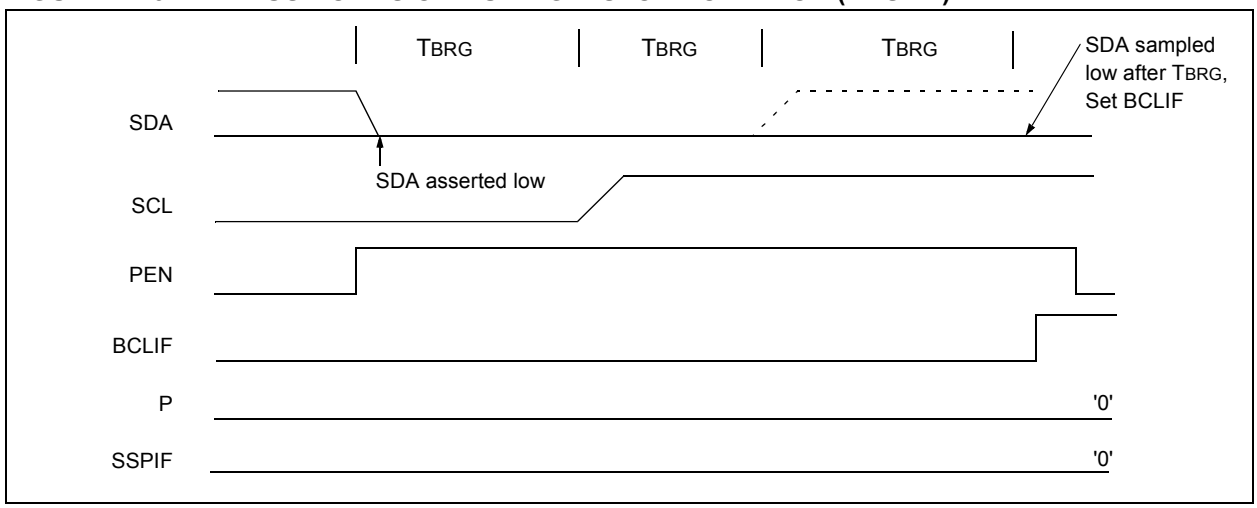

FIGURE 17-32: BUS COLLISION DURING A STOP CONDITION (CASE 2)

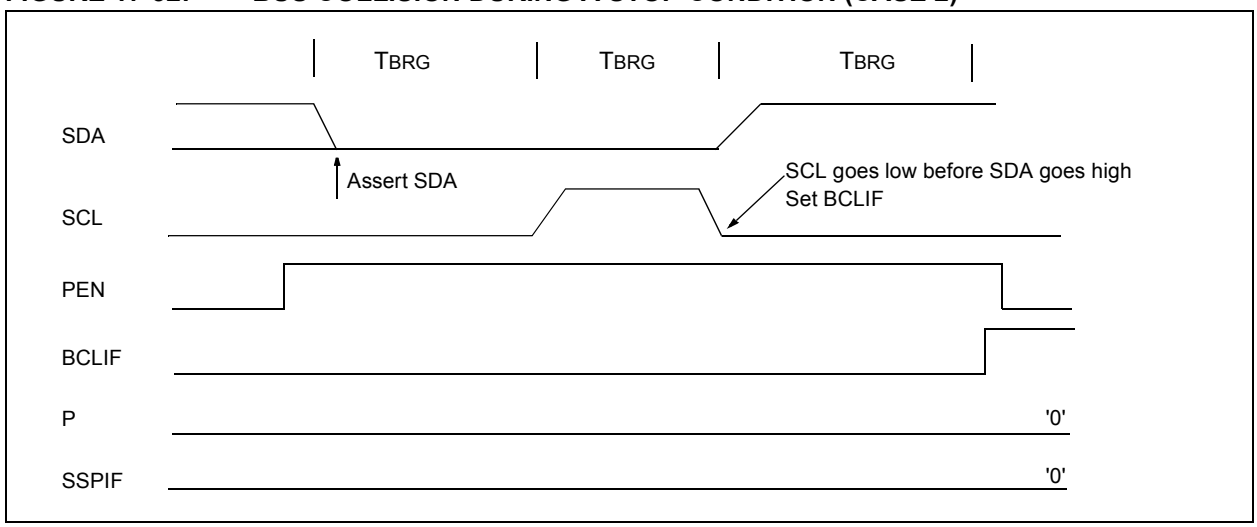

NOTES:

© 2003 Microchip Technology Inc.

18.0 ADDRESSABLE UNIVERSAL SYNCHRONOUS ASYNCHRONOUS RECEIVER TRANSMITTER (USART)

The Universal Synchronous Asynchronous Receiver Transmitter (USART) module is one of the three serial I/O modules incorporated into PIC18FXX8 devices. (USART is also known as a Serial Communications Interface or SCI.) The USART can be configured as a full-duplex asynchronous system that can communicate with peripheral devices, such as CRT terminals and personal computers, or it can be configured as a half-duplex synchronous system that can communicate with peripheral devices, such as A/D or D/A integrated circuits, Serial EEPROMs, etc.

The USART can be configured in the following modes:

- Asynchronous (full-duplex)
- Synchronous - Master (half-duplex)
- Synchronous - Slave (half-duplex).

The SPEN (RCSTA register) and the TRISC<7> bits have to be set and the TRISC<6> bit must be cleared, in order to configure pins RC6/TX/CK and RC7/RX/DT as the Universal Synchronous Asynchronous Receiver Transmitter.

Register 18-1 shows the Transmit Status and Control Register (TXSTA) and Register 18-2 shows the Receive Status and Control Register (RCSTA).

REGISTER 18-1: TXSTA REGISTER

R/W-0	R/W-0	R/W-0	R/W-0	U-0	R/W-0	R-1	R/W-0
CSRC	TX9	TXEN	SYNC	—	BRGH	TRMT	TX9D
bit 7							bit 0

bit 7 **CSRC:** Clock Source Select bit
Asynchronous mode:
Don't care
Synchronous mode:
1 = Master mode (Clock generated internally from BRG)
0 = Slave mode (Clock from external source)

bit 6 **TX9**: 9-bit Transmit Enable bit
1 = Selects 9-bit transmission
0 = Selects 8-bit transmission

bit 5 **TXEN**: Transmit Enable bit
1 = Transmit enabled
0 = Transmit disabled

Note: SREN/CREN overrides TXEN in Sync mode.

bit 4 **SYNC:** USART Mode Select bit
1 = Synchronous mode
0 = Asynchronous mode

bit 3 **Unimplemented:** Read as '0'

bit 2 **BRGH**: High Baud Rate Select bit
Asynchronous mode:
1 = High speed
0 = Low speed
Synchronous mode:
Unused in this mode

bit 1 **TRMT**: Transmit Shift Register Status bit
1 = TSR empty
0 = TSR full

bit 0 **TX9D:** 9th bit of Transmit Data
Can be address/data bit or a parity bit

Legend:			
R = Readable bit	W = Writable bit	U = Unimplemented bit, read as '0'	
- n = Value at POR	'1' = Bit is set	'0' = Bit is cleared	x = Bit is unknown

REGISTER 18-2: RCSTA REGISTER

R/W-0	R/W-0	R/W-0	R/W-0	R/W-0	R-0	R-0	R-x
SPEN	RX9	SREN	CREN	ADDEN	FERR	OERR	RX9D
bit 7							bit 0

bit 7 **SPEN:** Serial Port Enable bit
1 = Serial port enabled (configures RX/DT and TX/CK pins as serial port pins)
0 = Serial port disabled

bit 6 **RX9**: 9-bit Receive Enable bit
1 = Selects 9-bit reception
0 = Selects 8-bit reception

bit 5 **SREN**: Single Receive Enable bit
Asynchronous mode:
Don't care
Synchronous mode - Master:
1 = Enables single receive
0 = Disables single receive (this bit is cleared after reception is complete)
Synchronous mode - Slave:
Unused in this mode

bit 4 **CREN**: Continuous Receive Enable bit
Asynchronous mode:
1 = Enables continuous receive
0 = Disables continuous receive
Synchronous mode:
1 = Enables continuous receive until enable bit CREN is cleared (CREN overrides SREN)
0 = Disables continuous receive

bit 3 **ADDEN**: Address Detect Enable bit
Asynchronous mode 9-bit (RX9 = 1):
1 = Enables address detection, enables interrupt and load of the receive buffer when RSR<8> is set
0 = Disables address detection, all bytes are received, and ninth bit can be used as parity bit

bit 2 **FERR**: Framing Error bit
1 = Framing error (can be updated by reading RCREG register and receive next valid byte)
0 = No framing error

bit 1 **OERR**: Overrun Error bit
1 = Overrun error (can be cleared by clearing bit CREN)
0 = No overrun error

bit 0 **RX9D:** 9th bit of Received Data
Can be address/data bit or a parity bit

Legend:			
R = Readable bit	W = Writable bit	U = Unimplemented bit, read as '0'	
- n = Value at POR	'1' = Bit is set	'0' = Bit is cleared	x = Bit is unknown

© 2003 Microchip Technology Inc.

18.1 USART Baud Rate Generator (BRG)

The BRG supports both the Asynchronous and Synchronous modes of the USART. It is a dedicated 8-bit baud rate generator. The SPBRG register controls the period of a free running 8-bit timer. In Asynchronous mode, bit BRGH (TXSTA register) also controls the baud rate. In Synchronous mode, bit BRGH is ignored. Table 18-1 shows the formula for computation of the baud rate for different USART modes, which only apply in Master mode (internal clock).

Given the desired baud rate and FOSC, the nearest integer value for the SPBRG register can be calculated using the formula in Table 18-1. From this, the error in baud rate can be determined.

Example 18-1 shows the calculation of the baud rate error for the following conditions:

FOSC = 16 MHz
Desired Baud Rate = 9600
BRGH = 0
SYNC = 0

It may be advantageous to use the high baud rate (BRGH = 1), even for slower baud clocks. This is because the FOSC/(16(X + 1)) equation can reduce the baud rate error in some cases.

Writing a new value to the SPBRG register causes the BRG timer to be reset (or cleared). This ensures the BRG does not wait for a timer overflow before outputting the new baud rate.

18.1.1 SAMPLING

The data on the RC7/RX/DT pin is sampled three times by a majority detect circuit to determine if a high or a low level is present at the RX pin.

EXAMPLE 18-1: CALCULATING BAUD RATE ERROR

Desired Baud Rate = FOSC / (64 (X + 1))

Solving for X:

X = ((FOSC / Desired Baud Rate) / 64) – 1
X = ((16000000 / 9600) / 64) – 1
X = [25.042] = 25

Calculated Baud Rate = 16000000 / (64 (25 + 1))
= 9615

$$\text{Error} = \frac{\text{(Calculated Baud Rate – Desired Baud Rate)}}{\text{Desired Baud Rate}}$$
= (9615 – 9600) / 9600
= 0.16%

TABLE 18-1: BAUD RATE FORMULA

SYNC	BRGH = 0 (Low Speed)	BRGH = 1 (High Speed)
0	(Asynchronous) Baud Rate = FOSC/(64(X+1))	Baud Rate = FOSC/(16(X+1))
1	(Synchronous) Baud Rate = FOSC/(4(X+1))	NA

Legend: X = value in SPBRG (0 to 255)

TABLE 18-2: REGISTERS ASSOCIATED WITH BAUD RATE GENERATOR

Name	Bit 7	Bit 6	Bit 5	Bit 4	Bit 3	Bit 2	Bit 1	Bit 0	Value on POR, BOR	Value on all other RESETS
TXSTA	CSRC	TX9	TXEN	SYNC	—	BRGH	TRMT	TX9D	0000 -010	0000 -010
RCSTA	SPEN	RX9	SREN	CREN	ADDEN	FERR	OERR	RX9D	0000 000x	0000 000x
SPBRG	Baud Rate Generator Register								0000 0000	0000 0000

Legend: x = unknown, - = unimplemented, read as '0'. Shaded cells are not used by the BRG.

TABLE 18-3: BAUD RATES FOR SYNCHRONOUS MODE

BAUD RATE (Kbps)	Fosc = 40 MHz		SPBRG value (decimal)	33 MHz		SPBRG value (decimal)	25 MHz		SPBRG value (decimal)	20 MHz		SPBRG value (decimal)
	KBAUD	% ERROR		KBAUD	% ERROR		KBAUD	% ERROR		KBAUD	% ERROR	
0.3	NA	-	-	NA	-	-	NA	-	-	NA	-	-
1.2	NA	-	-	NA	-	-	NA	-	-	NA	-	-
2.4	NA	-	-	NA	-	-	NA	-	-	NA	-	-
9.6	NA	-	-	NA	-	-	NA	-	-	NA	-	-
19.2	NA	-	-	NA	-	-	NA	-	-	NA	-	-
76.8	76.92	+0.16	129	77.10	+0.39	106	77.16	+0.47	80	76.92	+0.16	64
96	96.15	+0.16	103	95.93	-0.07	85	96.15	+0.16	64	96.15	+0.16	51
300	303.03	+1.01	32	294.64	-1.79	27	297.62	-0.79	20	294.12	-1.96	16
500	500	0	19	485.30	-2.94	16	480.77	-3.85	12	500	0	9
HIGH	10000	-	0	8250	-	0	6250	-	0	5000	-	0
LOW	39.06	-	255	32.23	-	255	24.41	-	255	19.53	-	255

BAUD RATE (Kbps)	Fosc = 16 MHz		SPBRG value (decimal)	10 MHz		SPBRG value (decimal)	7.15909 MHz		SPBRG value (decimal)	5.0688 MHz		SPBRG value (decimal)
	KBAUD	% ERROR		KBAUD	% ERROR		KBAUD	% ERROR		KBAUD	% ERROR	
0.3	NA	-	-	NA	-	-	NA	-	-	NA	-	-
1.2	NA	-	-	NA	-	-	NA	-	-	NA	-	-
2.4	NA	-	-	NA	-	-	NA	-	-	NA	-	-
9.6	NA	-	-	NA	-	-	9.62	+0.23	185	9.60	0	131
19.2	19.23	+0.16	207	19.23	+0.16	129	19.24	+0.23	92	19.20	0	65
76.8	76.92	+0.16	51	75.76	-1.36	32	77.82	+1.32	22	74.54	-2.94	16
96	95.24	-0.79	41	96.15	+0.16	25	94.20	-1.88	18	97.48	+1.54	12
300	307.70	+2.56	12	312.50	+4.17	7	298.35	-0.57	5	316.80	+5.60	3
500	500	0	7	500	0	4	447.44	-10.51	3	422.40	-15.52	2
HIGH	4000	-	0	2500	-	0	1789.80	-	0	1267.20	-	0
LOW	15.63	-	255	9.77	-	255	6.99	-	255	4.95	-	255

BAUD RATE (Kbps)	Fosc = 4 MHz		SPBRG value (decimal)	3.579545 MHz		SPBRG value (decimal)	1 MHz		SPBRG value (decimal)	32.768 kHz		SPBRG value (decimal)
	KBAUD	% ERROR		KBAUD	% ERROR		KBAUD	% ERROR		KBAUD	% ERROR	
0.3	NA	-	-	NA	-	-	NA	-	-	0.30	+1.14	26
1.2	NA	-	-	NA	-	-	1.20	+0.16	207	1.17	-2.48	6
2.4	NA	-	-	NA	-	-	2.40	+0.16	103	2.73	+13.78	2
9.6	9.62	+0.16	103	9.62	+0.23	92	9.62	+0.16	25	8.20	-14.67	0
19.2	19.23	+0.16	51	19.04	-0.83	46	19.23	+0.16	12	NA	-	-
76.8	76.92	+0.16	12	74.57	-2.90	11	83.33	+8.51	2	NA	-	-
96	1000	+4.17	9	99.43	+3.57	8	83.33	-13.19	2	NA	-	-
300	333.33	+11.11	2	298.30	-0.57	2	250	-16.67	0	NA	-	-
500	500	0	1	447.44	-10.51	1	NA	-	-	NA	-	-
HIGH	1000	-	0	894.89	-	0	250	-	0	8.20	-	0
LOW	3.91	-	255	3.50	-	255	0.98	-	255	0.03	-	255

© 2003 Microchip Technology Inc.

TABLE 18-4: BAUD RATES FOR ASYNCHRONOUS MODE (BRGH = 0)

BAUD RATE (Kbps)	Fosc = 40 MHz		SPBRG value (decimal)	33 MHz		SPBRG value (decimal)	25 MHz		SPBRG value (decimal)	20 MHz		SPBRG value (decimal)
	KBAUD	% ERROR		KBAUD	% ERROR		KBAUD	% ERROR		KBAUD	% ERROR	
0.3	NA	-	-	NA	-	-	NA	-	-	NA	-	-
1.2	NA	-	-	NA	-	-	NA	-	-	NA	-	-
2.4	NA	-	-	2.40	-0.07	214	2.40	-0.15	162	2.40	+0.16	129
9.6	9.62	+0.16	64	9.55	-0.54	53	9.53	-0.76	40	9.47	-1.36	32
19.2	18.94	-1.36	32	19.10	-0.54	26	19.53	+1.73	19	19.53	+1.73	15
76.8	78.13	+1.73	7	73.66	-4.09	6	78.13	+1.73	4	78.13	+1.73	3
96	89.29	-6.99	6	103.13	+7.42	4	97.66	+1.73	3	104.17	+8.51	2
300	312.50	+4.17	1	257.81	-14.06	1	NA	-	-	312.50	+4.17	0
500	625	+25.00	0	NA	-	-	NA	-	-	NA	-	-
HIGH	625	-	0	515.63	-	0	390.63	-	0	312.50	-	0
LOW	2.44	-	255	2.01	-	255	1.53	-	255	1.22	-	255

BAUD RATE (Kbps)	Fosc = 16 MHz		SPBRG value (decimal)	10 MHz		SPBRG value (decimal)	7.15909 MHz		SPBRG value (decimal)	5.0688 MHz		SPBRG value (decimal)
	KBAUD	% ERROR		KBAUD	% ERROR		KBAUD	% ERROR		KBAUD	% ERROR	
0.3	NA	-	-	NA	-	-	NA	-	-	NA	-	-
1.2	1.20	+0.16	207	1.20	+0.16	129	1.20	+0.23	92	1.20	0	65
2.4	2.40	+0.16	103	2.40	+0.16	64	2.38	-0.83	46	2.40	0	32
9.6	9.62	+0.16	25	9.77	+1.73	15	9.32	-2.90	11	9.90	+3.13	7
19.2	19.23	+0.16	12	19.53	+1.73	7	18.64	-2.90	5	19.80	+3.13	3
76.8	83.33	+8.51	2	78.13	+1.73	1	111.86	+45.65	0	79.20	+3.13	0
96	83.33	-13.19	2	78.13	-18.62	1	NA	-	-	NA	-	-
300	250	-16.67	0	156.25	-47.92	0	NA	-	-	NA	-	-
500	NA	-	-	NA	-	-	NA	-	-	NA	-	-
HIGH	250	-	0	156.25	-	0	111.86	-	0	79.20	-	0
LOW	0.98	-	255	0.61	-	255	0.44	-	255	0.31	-	255

BAUD RATE (Kbps)	Fosc = 4 MHz		SPBRG value (decimal)	3.579545 MHz		SPBRG value (decimal)	1 MHz		SPBRG value (decimal)	32.768 kHz		SPBRG value (decimal)
	KBAUD	% ERROR		KBAUD	% ERROR		KBAUD	% ERROR		KBAUD	% ERROR	
0.3	0.30	-0.16	207	0.30	+0.23	185	0.30	+0.16	51	0.26	-14.67	1
1.2	1.20	+1.67	51	1.19	-0.83	46	1.20	+0.16	12	NA	-	-
2.4	2.40	+1.67	25	2.43	+1.32	22	2.23	-6.99	6	NA	-	-
9.6	8.93	-6.99	6	9.32	-2.90	5	7.81	-18.62	1	NA	-	-
19.2	20.83	+8.51	2	18.64	-2.90	2	15.63	-18.62	0	NA	-	-
76.8	62.50	-18.62	0	55.93	-27.17	0	NA	-	-	NA	-	-
96	NA	-	-	NA	-	-	NA	-	-	NA	-	-
300	NA	-	-	NA	-	-	NA	-	-	NA	-	-
500	NA	-	-	NA	-	-	NA	-	-	NA	-	-
HIGH	62.50	-	0	55.93	-	0	15.63	-	0	0.51	-	0
LOW	0.24	-	255	0.22	-	255	0.06	-	255	0.002	-	255

TABLE 18-5: BAUD RATES FOR ASYNCHRONOUS MODE (BRGH = 1)

BAUD RATE (Kbps)	Fosc = 40 MHz		SPBRG value (decimal)	33 MHz		SPBRG value (decimal)	25 MHz		SPBRG value (decimal)	20 MHz		SPBRG value (decimal)
	KBAUD	% ERROR		KBAUD	% ERROR		KBAUD	% ERROR		KBAUD	% ERROR	
0.3	NA	-	-	NA	-	-	NA	-	-	NA	-	-
1.2	NA	-	-	NA	-	-	NA	-	-	NA	-	-
2.4	NA	-	-	NA	-	-	NA	-	-	NA	-	-
9.6	NA	-	-	9.60	-0.07	214	9.59	-0.15	162	9.62	+0.16	129
19.2	19.23	+0.16	129	19.28	+0.39	106	19.30	+0.47	80	19.23	+0.16	64
76.8	75.76	-1.36	32	76.39	-0.54	26	78.13	+1.73	19	78.13	+1.73	15
96	96.15	+0.16	25	98.21	+2.31	20	97.66	+1.73	15	96.15	+0.16	12
300	312.50	+4.17	7	294.64	-1.79	6	312.50	+4.17	4	312.50	+4.17	3
500	500	0	4	515.63	+3.13	3	520.83	+4.17	2	416.67	-16.67	2
HIGH	2500	-	0	2062.50	-	0	1562.50	-	0	1250	-	0
LOW	9.77	-	255	8,06	-	255	6.10	-	255	4.88	-	255

BAUD RATE (Kbps)	Fosc = 16 MHz		SPBRG value (decimal)	10 MHz		SPBRG value (decimal)	7.15909 MHz		SPBRG value (decimal)	5.0688 MHz		SPBRG value (decimal)
	KBAUD	% ERROR		KBAUD	% ERROR		KBAUD	% ERROR		KBAUD	% ERROR	
0.3	NA	-	-	NA	-	-	NA	-	-	NA	-	-
1.2	NA	-	-	NA	-	-	NA	-	-	NA	-	-
2.4	NA	-	-	NA	-	-	2.41	+0.23	185	2.40	0	131
9.6	9.62	+0.16	103	9.62	+0.16	64	9.52	-0.83	46	9.60	0	32
19.2	19.23	+0.16	51	18.94	-1.36	32	19.45	+1.32	22	18.64	-2.94	16
76.8	76.92	+0.16	12	78.13	+1.73	7	74.57	-2.90	5	79.20	+3.13	3
96	100	+4.17	9	89.29	-6.99	6	89.49	-6.78	4	105.60	+10.00	2
300	333.33	+11.11	2	312.50	+4.17	1	447.44	+49.15	0	316.80	+5.60	0
500	500	0	1	625	+25.00	0	447.44	-10.51	0	NA	-	-
HIGH	1000	-	0	625	-	0	447.44	-	0	316.80	-	0
LOW	3.91	-	255	2.44	-	255	1.75	-	255	1.24	-	255

BAUD RATE (Kbps)	Fosc = 4 MHz		SPBRG value (decimal)	3.579545 MHz		SPBRG value (decimal)	1 MHz		SPBRG value (decimal)	32.768 kHz		SPBRG value (decimal)
	KBAUD	% ERROR		KBAUD	% ERROR		KBAUD	% ERROR		KBAUD	% ERROR	
0.3	NA	-	-	NA	-	-	0.30	+0.16	207	0.29	-2.48	6
1.2	1.20	+0.16	207	1.20	+0.23	185	1.20	+0.16	51	1.02	-14.67	1
2.4	2.40	+0.16	103	2.41	+0.23	92	2.40	+0.16	25	2.05	-14.67	0
9.6	9.62	+0.16	25	9.73	+1.32	22	8.93	-6.99	6	NA	-	-
19.2	19.23	+0.16	12	18.64	-2.90	11	20.83	+8.51	2	NA	-	-
76.8	NA	-	-	74.57	-2.90	2	62.50	-18.62	0	NA	-	-
96	NA	-	-	111.86	+16.52	1	NA	-	-	NA	-	-
300	NA	-	-	223.72	-25.43	0	NA	-	-	NA	-	-
500	NA	-	-	NA	-	-	NA	-	-	NA	-	-
HIGH	250	-	0	55.93	-	0	62.50	-	0	2.05	-	0
LOW	0.98	-	255	0.22	-	255	0.24	-	255	0.008	-	255

© 2003 Microchip Technology Inc.

18.2 USART Asynchronous Mode

In this mode, the USART uses standard non-return-to-zero (NRZ) format (one START bit, eight or nine data bits and one STOP bit). The most common data format is 8 bits. An on-chip dedicated 8-bit baud rate generator can be used to derive standard baud rate frequencies from the oscillator. The USART transmits and receives the LSb first. The USART's transmitter and receiver are functionally independent, but use the same data format and baud rate. The baud rate generator produces a clock, either x16 or x64 of the bit shift rate, depending on the BRGH bit (TXSTA register). Parity is not supported by the hardware, but can be implemented in software (and stored as the ninth data bit). Asynchronous mode is stopped during SLEEP.

Asynchronous mode is selected by clearing the SYNC bit (TXSTA register).

The USART Asynchronous module consists of the following important elements:

- Baud Rate Generator
- Sampling Circuit
- Asynchronous Transmitter
- Asynchronous Receiver.

18.2.1 USART ASYNCHRONOUS TRANSMITTER

The USART transmitter block diagram is shown in Figure 18-1. The heart of the transmitter is the Transmit (serial) Shift Register (TSR). The TSR register obtains its data from the Read/Write Transmit Buffer register (TXREG). The TXREG register is loaded with data in software. The TSR register is not loaded until the STOP bit has been transmitted from the previous load. As soon as the STOP bit is transmitted, the TSR is loaded with new data from the TXREG register (if available). Once the TXREG register transfers the data to the TSR register (occurs in one TCY), the TXREG register is empty and flag bit TXIF (PIR registers) is set. This interrupt can be enabled/disabled by setting/clearing enable bit TXIE (PIE registers). Flag bit TXIF will be set, regardless of the state of enable bit TXIE and cannot be cleared in software. It will reset only when new data is loaded into the TXREG register. While flag bit TXIF indicated the status of the TXREG register, another bit TRMT (TXSTA register) shows the status of the TSR register. Status bit TRMT is a read only bit, which is set when the TSR register is empty. No interrupt logic is tied to this bit, so the user has to poll this bit in order to determine if the TSR register is empty.

Note 1:	The TSR register is not mapped in data memory, so it is not available to the user.
2:	Flag bit TXIF is set when enable bit TXEN is set.

Steps to follow when setting up an Asynchronous Transmission:

1. Initialize the SPBRG register for the appropriate baud rate. If a high speed baud rate is desired, set bit BRGH (Section 18.1).
2. Enable the asynchronous serial port by clearing bit SYNC and setting bit SPEN.
3. If interrupts are desired, set enable bit TXIE.
4. If 9-bit transmission is desired, set transmit bit TX9. Can be used as address/data bit.
5. Enable the transmission by setting bit TXEN, which will also set bit TXIF.
6. If 9-bit transmission is selected, the ninth bit should be loaded in bit TX9D.
7. Load data to the TXREG register (starts transmission).

Note:	TXIF is not cleared immediately upon loading data into the transmit buffer TXREG. The flag bit becomes valid in the second instruction cycle following the load instruction.

FIGURE 18-1: USART TRANSMIT BLOCK DIAGRAM

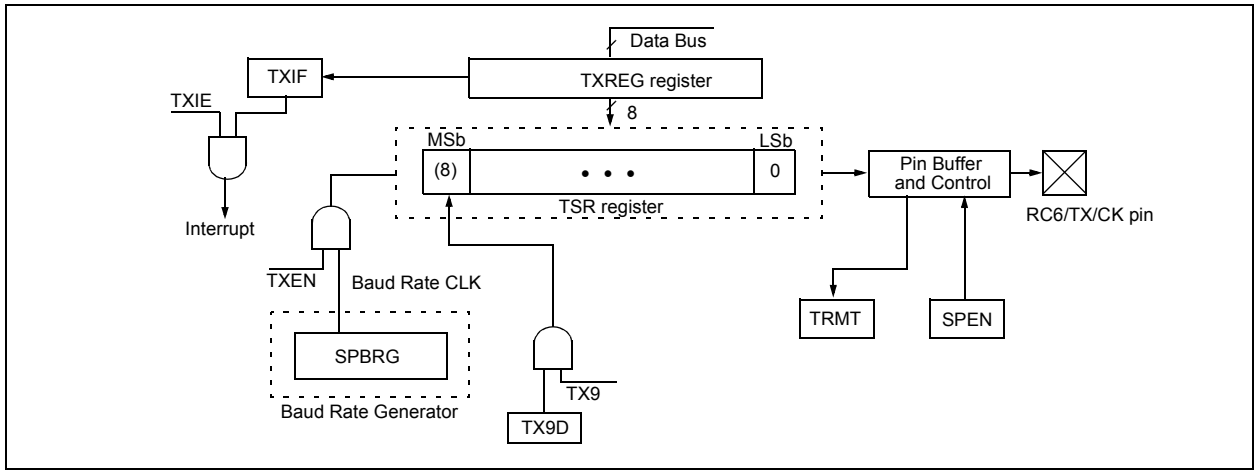

FIGURE 18-2: ASYNCHRONOUS TRANSMISSION

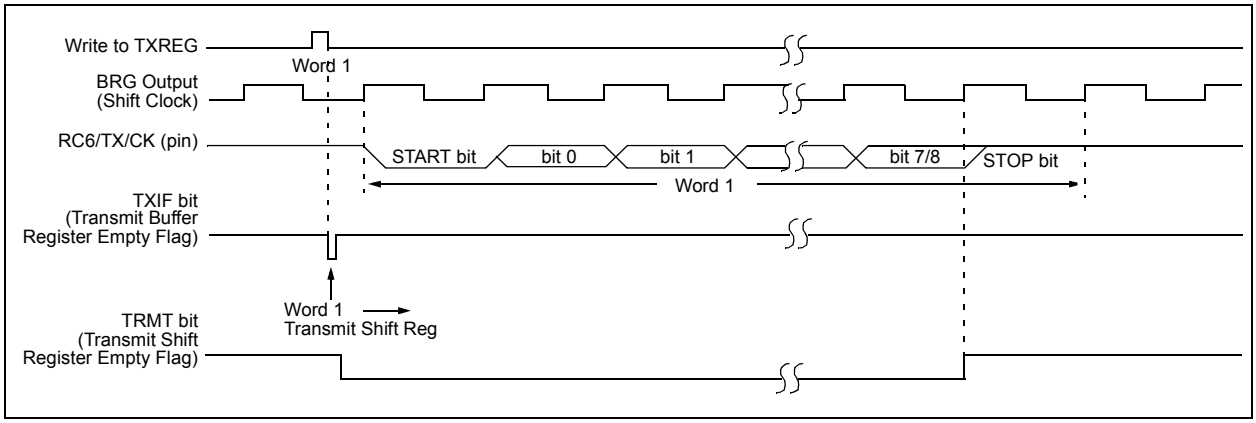

FIGURE 18-3: ASYNCHRONOUS TRANSMISSION (BACK TO BACK)

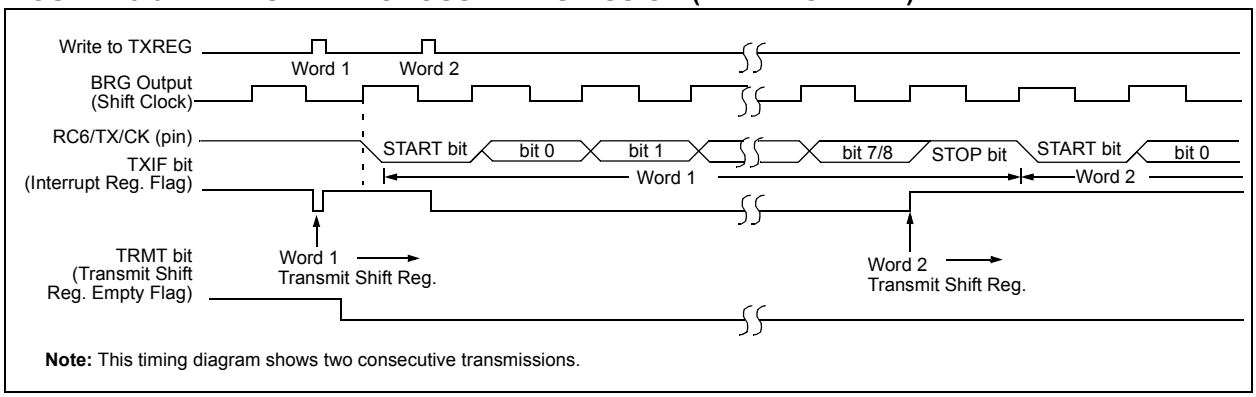

Note: This timing diagram shows two consecutive transmissions.

TABLE 18-6: REGISTERS ASSOCIATED WITH ASYNCHRONOUS TRANSMISSION

Name	Bit 7	Bit 6	Bit 5	Bit 4	Bit 3	Bit 2	Bit 1	Bit 0	Value on POR, BOR	Value on all other RESETS
INTCON	GIE/GIEH	PEIE/GIEL	TMR0IE	INT0IE	RBIE	TMR0IF	INT0IF	RBIF	0000 000x	0000 000u
PIR1	PSPIF	ADIF	RCIF	TXIF	SSPIF	CCP1IF	TMR2IF	TMR1IF	0000 0000	0000 0000
PIE1	PSPIE	ADIE	RCIE	TXIE	SSPIE	CCP1IE	TMR2IE	TMR1IE	0000 0000	0000 0000
IPR1	PSPIP	ADIP	RCIP	TXIP	SSPIP	CCP1IP	TMR2IP	TMR1IP	1111 1111	1111 1111
RCSTA	SPEN	RX9	SREN	CREN	ADDEN	FERR	OERR	RX9D	0000 000x	0000 000x
TXREG	USART Transmit Register								0000 0000	0000 0000
TXSTA	CSRC	TX9	TXEN	SYNC	—	BRGH	TRMT	TX9D	0000 -010	0000 -010
SPBRG	Baud Rate Generator Register								0000 0000	0000 0000

Legend: x = unknown, - = unimplemented locations read as '0'.
Shaded cells are not used for Asynchronous Transmission.

© 2003 Microchip Technology Inc.

18.2.2 USART ASYNCHRONOUS RECEIVER

The receiver block diagram is shown in Figure 18-4. The data is received on the RC7/RX/DT pin and drives the data recovery block. The data recovery block is actually a high speed shifter, operating at x16 times the baud rate, whereas the main receive serial shifter operates at the bit rate, or at FOSC. This mode would typically be used in RS-232 systems.

Steps to follow when setting up an Asynchronous Reception:

1. Initialize the SPBRG register for the appropriate baud rate. If a high speed baud rate is desired, set bit BRGH (Section 18.1).
2. Enable the asynchronous serial port by clearing bit SYNC and setting bit SPEN.
3. If interrupts are desired, set enable bit RCIE.
4. If 9-bit reception is desired, set bit RX9.
5. Enable the reception by setting bit CREN.
6. Flag bit RCIF will be set when reception is complete and an interrupt will be generated if enable bit RCIE was set.
7. Read the RCSTA register to get the ninth bit (if enabled) and determine if any error occurred during reception.
8. Read the 8-bit received data by reading the RCREG register.
9. If any error occurred, clear the error by clearing enable bit CREN.

18.2.3 SETTING UP 9-BIT MODE WITH ADDRESS DETECT

This mode would typically be used in RS-485 systems. Steps to follow when setting up an Asynchronous Reception with Address Detect Enable:

1. Initialize the SPBRG register for the appropriate baud rate. If a high speed baud rate is required, set the BRGH bit.
2. Enable the asynchronous serial port by clearing the SYNC bit and setting the SPEN bit.
3. If interrupts are required, set the RCEN bit and select the desired priority level with the RCIP bit.
4. Set the RX9 bit to enable 9-bit reception.
5. Set the ADDEN bit to enable address detect.
6. Enable reception by setting the CREN bit.
7. The RCIF bit will be set when reception is complete. The interrupt will be Acknowledged if the RCIE and GIE bits are set.
8. Read the RCSTA register to determine if any error occurred during reception, as well as read bit 9 of data (if applicable).
9. Read RCREG to determine if the device is being addressed.
10. If any error occurred, clear the CREN bit.
11. If the device has been addressed, clear the ADDEN bit to allow all received data into the receive buffer and interrupt the CPU.

FIGURE 18-4: USART RECEIVE BLOCK DIAGRAM

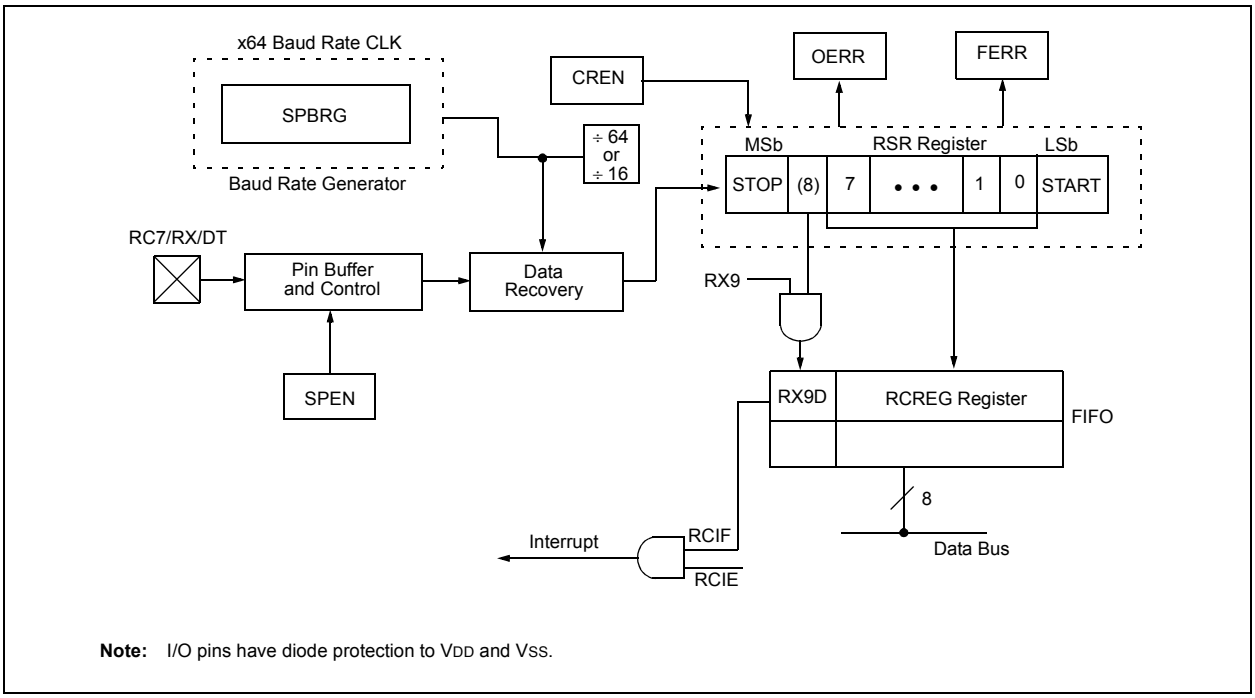

Note: I/O pins have diode protection to VDD and VSS.

FIGURE 18-5: ASYNCHRONOUS RECEPTION

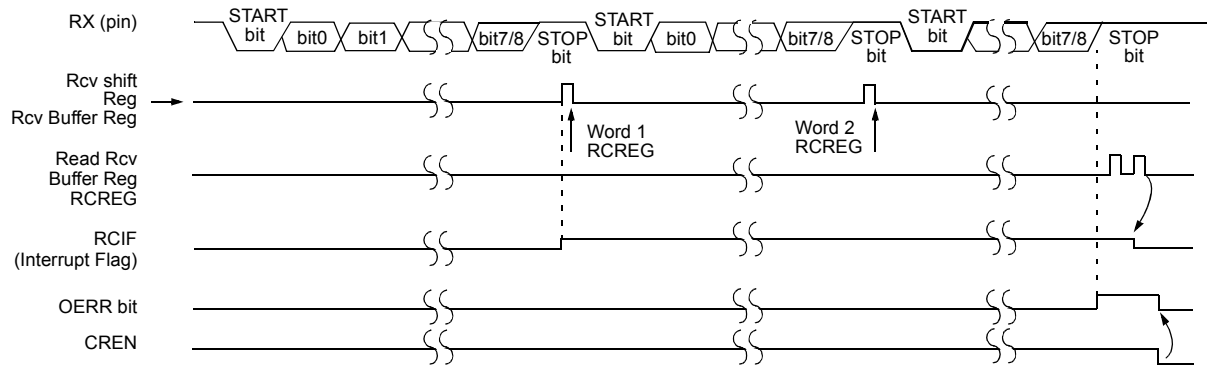

Note: This timing diagram shows three words appearing on the RX input. The RCREG (receive buffer) is read after the third word, causing the OERR (overrun) bit to be set.

TABLE 18-7: REGISTERS ASSOCIATED WITH ASYNCHRONOUS RECEPTION

Name	Bit 7	Bit 6	Bit 5	Bit 4	Bit 3	Bit 2	Bit 1	Bit 0	Value on POR, BOR	Value on all other RESETS
INTCON	GIE/GIEH	PEIE/GIEL	TMR0IE	INT0IE	RBIE	TMR0IF	INT0IF	RBIF	0000 000x	0000 000u
PIR1	PSPIF	ADIF	RCIF	TXIF	SSPIF	CCP1IF	TMR2IF	TMR1IF	0000 0000	0000 0000
PIE1	PSPIE	ADIE	RCIE	TXIE	SSPIE	CCP1IE	TMR2IE	TMR1IE	0000 0000	0000 0000
IPR1	PSPIP	ADIP	RCIP	TXIP	SSPIP	CCP1IP	TMR2IP	TMR1IP	1111 1111	1111 1111
RCSTA	SPEN	RX9	SREN	CREN	ADDEN	FERR	OERR	RX9D	0000 000x	0000 000x
RCREG	USART Receive Register								0000 0000	0000 0000
TXSTA	CSRC	TX9	TXEN	SYNC	—	BRGH	TRMT	TX9D	0000 -010	0000 -010
SPBRG	Baud Rate Generator Register								0000 0000	0000 0000

Legend: x = unknown, - = unimplemented locations read as '0'. Shaded cells are not used for Asynchronous Reception.

© 2003 Microchip Technology Inc.

18.3 USART Synchronous Master Mode

In Synchronous Master mode, the data is transmitted in a half-duplex manner (i.e., transmission and reception do not occur at the same time). When transmitting data, the reception is inhibited and vice versa. Synchronous mode is entered by setting bit SYNC (TXSTA register). In addition, enable bit SPEN (RCSTA register) is set, in order to configure the RC6/TX/CK and RC7/RX/DT I/O pins to CK (clock) and DT (data) lines, respectively. The Master mode indicates that the processor transmits the master clock on the CK line. The Master mode is entered by setting bit CSRC (TXSTA register).

18.3.1 USART SYNCHRONOUS MASTER TRANSMISSION

The USART transmitter block diagram is shown in Figure 18-1. The heart of the transmitter is the Transmit (serial) Shift register (TSR). The shift register obtains its data from the Read/Write Transmit Buffer register (TXREG). The TXREG register is loaded with data in software. The TSR register is not loaded until the last bit has been transmitted from the previous load. As soon as the last bit is transmitted, the TSR is loaded with new data from the TXREG (if available). Once the TXREG register transfers the data to the TSR register (occurs in one TCY), the TXREG is empty and interrupt bit TXIF (PIR registers) is set. The interrupt can be enabled/disabled by setting/clearing enable bit TXIE (PIE registers). Flag bit TXIF will be set, regardless of the state of enable bit TXIE and cannot be cleared in software. It will reset only when new data is loaded into the TXREG register. While flag bit TXIF indicates the status of the TXREG register, another bit TRMT (TXSTA register) shows the status of the TSR register. TRMT is a read only bit, which is set when the TSR is empty. No interrupt logic is tied to this bit, so the user has to poll this bit in order to determine if the TSR register is empty. The TSR is not mapped in data memory, so it is not available to the user.

Steps to follow when setting up a Synchronous Master Transmission:

1. Initialize the SPBRG register for the appropriate baud rate (Section 18.1).
2. Enable the synchronous master serial port by setting bits SYNC, SPEN, and CSRC.
3. If interrupts are desired, set enable bit TXIE.
4. If 9-bit transmission is desired, set bit TX9.
5. Enable the transmission by setting bit TXEN.
6. If 9-bit transmission is selected, the ninth bit should be loaded in bit TX9D.
7. Start transmission by loading data to the TXREG register.

Note: TXIF is not cleared immediately upon loading data into the transmit buffer TXREG. The flag bit becomes valid in the second instruction cycle following the load instruction.

TABLE 18-8: REGISTERS ASSOCIATED WITH SYNCHRONOUS MASTER TRANSMISSION

Name	Bit 7	Bit 6	Bit 5	Bit 4	Bit 3	Bit 2	Bit 1	Bit 0	Value on POR, BOR	Value on all other RESETS
INTCON	GIE/GIEH	PEIE/GIEL	TMR0IE	INT0IE	RBIE	TMR0IF	INT0IF	RBIF	0000 000x	0000 000u
PIR1	PSPIF	ADIF	RCIF	TXIF	SSPIF	CCP1IF	TMR2IF	TMR1IF	0000 0000	0000 0000
PIE1	PSPIE	ADIE	RCIE	TXIE	SSPIE	CCP1IE	TMR2IE	TMR1IE	0000 0000	0000 0000
IPR1	PSPIP	ADIP	RCIP	TXIP	SSPIP	CCP1IP	TMR2IP	TMR1IP	1111 1111	1111 1111
RCSTA	SPEN	RX9	SREN	CREN	ADDEN	FERR	OERR	RX9D	0000 000x	0000 000x
TXREG	USART Transmit Register								0000 0000	0000 0000
TXSTA	CSRC	TX9	TXEN	SYNC	—	BRGH	TRMT	TX9D	0000 -010	0000 -010
SPBRG	Baud Rate Generator Register								0000 0000	0000 0000

Legend: x = unknown, - = unimplemented, read as '0'. Shaded cells are not used for Synchronous Master Transmission.

FIGURE 18-6: SYNCHRONOUS TRANSMISSION

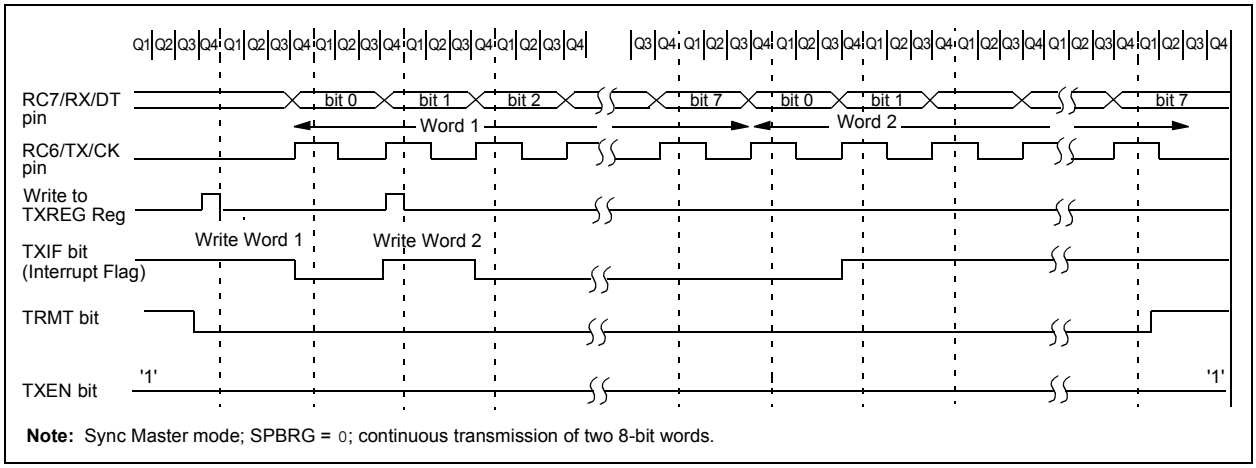

Note: Sync Master mode; SPBRG = 0; continuous transmission of two 8-bit words.

FIGURE 18-7: SYNCHRONOUS TRANSMISSION (THROUGH TXEN)

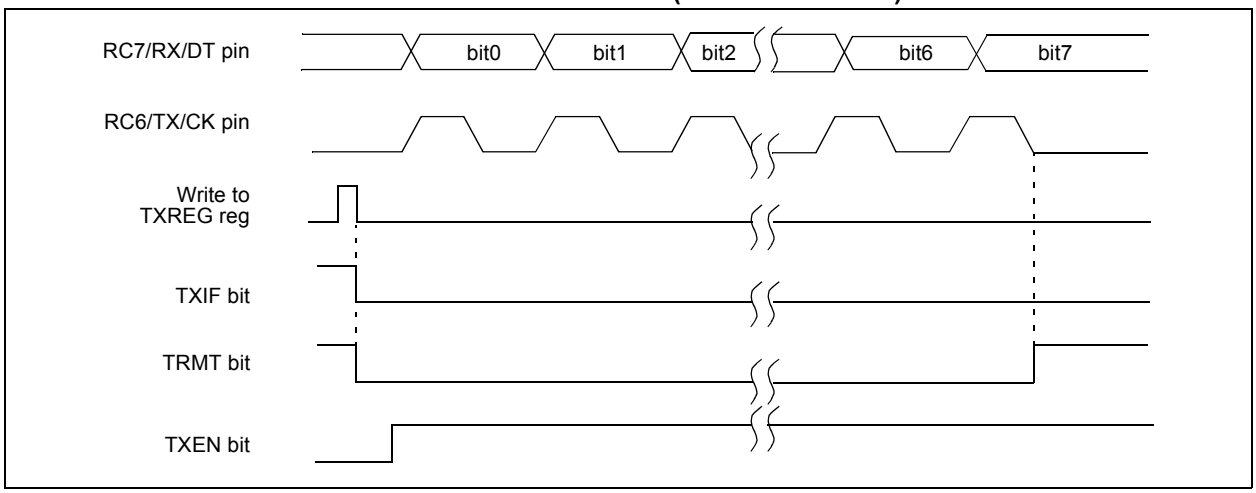

© 2003 Microchip Technology Inc.

18.3.2 USART SYNCHRONOUS MASTER RECEPTION

Once Synchronous Master mode is selected, reception is enabled by setting either enable bit SREN (RCSTA register), or enable bit CREN (RCSTA register). Data is sampled on the RC7/RX/DT pin on the falling edge of the clock. If enable bit SREN is set, only a single word is received. If enable bit CREN is set, the reception is continuous until CREN is cleared. If both bits are set, then CREN takes precedence.

Steps to follow when setting up a Synchronous Master Reception:

1. Initialize the SPBRG register for the appropriate baud rate (Section 18.1).
2. Enable the synchronous master serial port by setting bits SYNC, SPEN and CSRC.
3. Ensure bits CREN and SREN are clear.
4. If interrupts are desired, set enable bit RCIE.
5. If 9-bit reception is desired, set bit RX9.
6. If a single reception is required, set bit SREN. For continuous reception, set bit CREN.
7. Interrupt flag bit RCIF will be set when reception is complete and an interrupt will be generated if the enable bit RCIE was set.
8. Read the RCSTA register to get the ninth bit (if enabled) and determine if any error occurred during reception.
9. Read the 8-bit received data by reading the RCREG register.
10. If any error occurred, clear the error by clearing bit CREN.

TABLE 18-9: REGISTERS ASSOCIATED WITH SYNCHRONOUS MASTER RECEPTION

Name	Bit 7	Bit 6	Bit 5	Bit 4	Bit 3	Bit 2	Bit 1	Bit 0	Value on POR, BOR	Value on all other RESETS
INTCON	GIE/GIEH	PEIE/GIEL	TMR0IE	INT0IE	RBIE	TMR0IF	INT0IF	RBIF	0000 000x	0000 000u
PIR1	PSPIF	ADIF	RCIF	TXIF	SSPIF	CCP1IF	TMR2IF	TMR1IF	0000 0000	0000 0000
PIE1	PSPIE	ADIE	RCIE	TXIE	SSPIE	CCP1IE	TMR2IE	TMR1IE	0000 0000	0000 0000
IPR1	PSPIP	ADIP	RCIP	TXIP	SSPIP	CCP1IP	TMR2IP	TMR1IP	1111 1111	1111 1111
RCSTA	SPEN	RX9	SREN	CREN	ADDEN	FERR	OERR	RX9D	0000 000x	0000 000x
RCREG	USART Receive Register								0000 0000	0000 0000
TXSTA	CSRC	TX9	TXEN	SYNC	—	BRGH	TRMT	TX9D	0000 -010	0000 -010
SPBRG	Baud Rate Generator Register								0000 0000	0000 0000

Legend: x = unknown, - = unimplemented, read as '0'. Shaded cells are not used for Synchronous Master Reception.

FIGURE 18-8: SYNCHRONOUS RECEPTION (MASTER MODE, SREN)

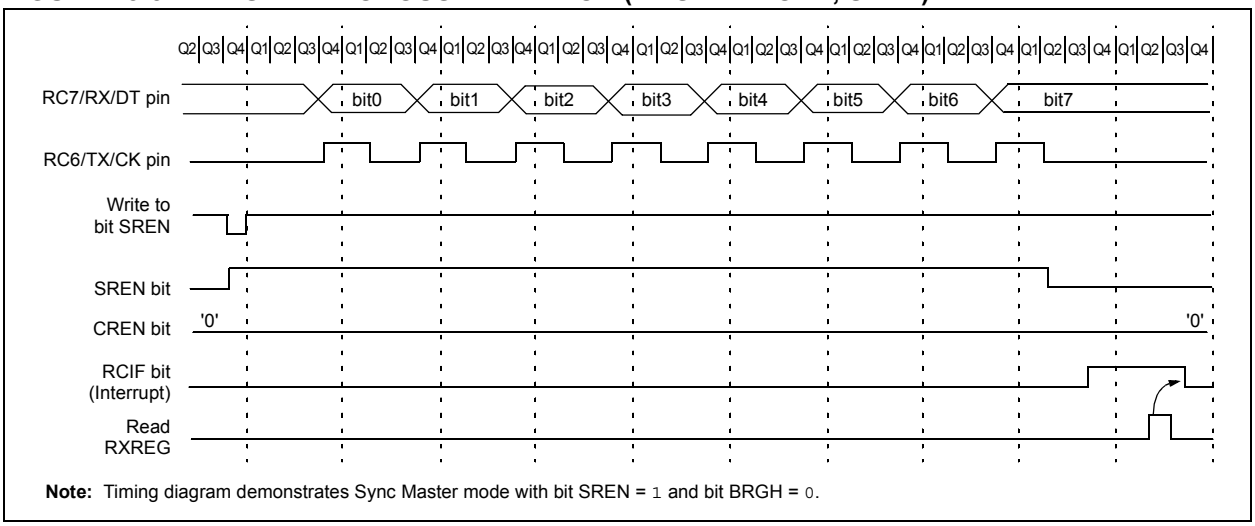

Note: Timing diagram demonstrates Sync Master mode with bit SREN = 1 and bit BRGH = 0.

18.4 USART Synchronous Slave Mode

Synchronous Slave mode differs from the Master mode, in that the shift clock is supplied externally at the RC6/TX/CK pin (instead of being supplied internally in Master mode). This allows the device to transfer or receive data while in SLEEP mode. Slave mode is entered by clearing bit CSRC (TXSTA register).

18.4.1 USART SYNCHRONOUS SLAVE TRANSMIT

The operation of the Synchronous Master and Slave modes are identical, except in the case of the SLEEP mode.

If two words are written to the TXREG and then the SLEEP instruction is executed, the following will occur:

a) The first word will immediately transfer to the TSR register and transmit.
b) The second word will remain in TXREG register.
c) Flag bit TXIF will not be set.
d) When the first word has been shifted out of TSR, the TXREG register will transfer the second word to the TSR and flag bit TXIF will be set.
e) If enable bit TXIE is set, the interrupt will wake the chip from SLEEP. If the global interrupt is enabled, the program will branch to the interrupt vector.

Steps to follow when setting up a Synchronous Slave Transmission:

1. Enable the synchronous slave serial port by setting bits SYNC and SPEN and clearing bit CSRC.
2. Clear bits CREN and SREN.
3. If interrupts are desired, set enable bit TXIE.
4. If 9-bit transmission is desired, set bit TX9.
5. Enable the transmission by setting enable bit TXEN.
6. If 9-bit transmission is selected, the ninth bit should be loaded in bit TX9D.
7. Start transmission by loading data to the TXREG register.

18.4.2 USART SYNCHRONOUS SLAVE RECEPTION

The operation of the Synchronous Master and Slave modes is identical, except in the case of the SLEEP mode and bit SREN, which is a "don't care" in Slave mode.

If receive is enabled by setting bit CREN prior to the SLEEP instruction, then a word may be received during SLEEP. On completely receiving the word, the RSR register will transfer the data to the RCREG register, and if enable bit RCIE bit is set, the interrupt generated will wake the chip from SLEEP. If the global interrupt is enabled, the program will branch to the interrupt vector.

Steps to follow when setting up a Synchronous Slave Reception:

1. Enable the synchronous master serial port by setting bits SYNC and SPEN and clearing bit CSRC.
2. If interrupts are desired, set enable bit RCIE.
3. If 9-bit reception is desired, set bit RX9.
4. To enable reception, set enable bit CREN.
5. Flag bit RCIF will be set when reception is complete. An interrupt will be generated if enable bit RCIE was set.
6. Read the RCSTA register to get the ninth bit (if enabled) and determine if any error occurred during reception.
7. Read the 8-bit received data by reading the RCREG register.
8. If any error occurred, clear the error by clearing bit CREN.

© 2003 Microchip Technology Inc.

TABLE 18-10: REGISTERS ASSOCIATED WITH SYNCHRONOUS SLAVE TRANSMISSION

Name	Bit 7	Bit 6	Bit 5	Bit 4	Bit 3	Bit 2	Bit 1	Bit 0	Value on POR, BOR	Value on all other RESETS
INTCON	GIE/GIEH	PEIE/GIEL	TMR0IE	INT0IE	RBIE	TMR0IF	INT0IF	RBIF	0000 000x	0000 000u
PIR1	PSPIF	ADIF	RCIF	TXIF	SSPIF	CCP1IF	TMR2IF	TMR1IF	0000 0000	0000 0000
PIE1	PSPIE	ADIE	RCIE	TXIE	SSPIE	CCP1IE	TMR2IE	TMR1IE	0000 0000	0000 0000
IPR1	PSPIP	ADIP	RCIP	TXIP	SSPIP	CCP1IP	TMR2IP	TMR1IP	1111 1111	1111 1111
RCSTA	SPEN	RX9	SREN	CREN	ADDEN	FERR	OERR	RX9D	0000 000x	0000 000x
TXREG	USART Transmit Register								0000 0000	0000 0000
TXSTA	CSRC	TX9	TXEN	SYNC	—	BRGH	TRMT	TX9D	0000 -010	0000 -010
SPBRG	Baud Rate Generator Register								0000 0000	0000 0000

Legend: x = unknown, - = unimplemented, read as '0'. Shaded cells are not used for Synchronous Slave Transmission.

TABLE 18-11: REGISTERS ASSOCIATED WITH SYNCHRONOUS SLAVE RECEPTION

Name	Bit 7	Bit 6	Bit 5	Bit 4	Bit 3	Bit 2	Bit 1	Bit 0	Value on POR, BOR	Value on all other RESETS
INTCON	GIE/GIEH	PEIE/GIEL	TMR0IE	INT0IE	RBIE	TMR0IF	INT0IF	RBIF	0000 000x	0000 000u
PIR1	PSPIF	ADIF	RCIF	TXIF	SSPIF	CCP1IF	TMR2IF	TMR1IF	0000 0000	0000 0000
PIE1	PSPIE	ADIE	RCIE	TXIE	SSPIE	CCP1IE	TMR2IE	TMR1IE	0000 0000	0000 0000
IPR1	PSPIP	ADIP	RCIP	TXIP	SSPIP	CCP1IP	TMR2IP	TMR1IP	1111 1111	1111 1111
RCSTA	SPEN	RX9	SREN	CREN	ADDEN	FERR	OERR	RX9D	0000 000x	0000 000x
RCREG	USART Receive Register								0000 0000	0000 0000
TXSTA	CSRC	TX9	TXEN	SYNC	—	BRGH	TRMT	TX9D	0000 -010	0000 -010
SPBRG	Baud Rate Generator Register								0000 0000	0000 0000

Legend: x = unknown, - = unimplemented, read as '0'. Shaded cells are not used for Synchronous Slave Reception.

NOTES:

© 2003 Microchip Technology Inc.

19.0 CAN MODULE

19.1 Overview

The Controller Area Network (CAN) module is a serial interface, useful for communicating with other peripherals or microcontroller devices. This interface/protocol was designed to allow communications within noisy environments.

The CAN module is a communication controller, implementing the CAN 2.0 A/B protocol as defined in the BOSCH specification. The module will support CAN 1.2, CAN 2.0A, CAN 2.0B Passive, and CAN 2.0B Active versions of the protocol. The module implementation is a full CAN system. The CAN specification is not covered within this data sheet. The reader may refer to the BOSCH CAN specification for further details.

The module features are as follows:

- Complies with ISO CAN Conformance Test
- Implementation of the CAN protocol CAN 1.2, CAN 2.0A and CAN 2.0B
- Standard and extended data frames
- 0 - 8 bytes data length
- Programmable bit rate up to 1 Mbit/sec
- Support for remote frames
- Double-buffered receiver with two prioritized received message storage buffers
- 6 full (standard/extended identifier) acceptance filters, 2 associated with the high priority receive buffer, and 4 associated with the low priority receive buffer
- 2 full acceptance filter masks, one each associated with the high and low priority receive buffers
- Three transmit buffers with application specified prioritization and abort capability
- Programmable wake-up functionality with integrated low pass filter
- Programmable Loopback mode supports self-test operation
- Signaling via interrupt capabilities for all CAN receiver and transmitter error states
- Programmable clock source
- Programmable link to timer module for time-stamping and network synchronization
- Low power SLEEP mode

19.1.1 OVERVIEW OF THE MODULE

The CAN bus module consists of a protocol engine and message buffering and control. The CAN protocol engine handles all functions for receiving and transmitting messages on the CAN bus. Messages are transmitted by first loading the appropriate data registers. Status and errors can be checked by reading the appropriate registers. Any message detected on the CAN bus is checked for errors and then matched against filters to see if it should be received and stored in one of the 2 receive registers.

The CAN Module supports the following frame types:

- Standard Data Frame
- Extended Data Frame
- Remote Frame
- Error Frame
- Overload Frame Reception
- Interframe Space

CAN module uses RB3/CANRX and RB2/CANTX/INT2 pins to interface with CAN bus. In order to configure CANRX and CANTX as CAN interface:

- bit TRISB<3> must be set;
- bit TRISB<2> must be cleared.

19.1.2 TRANSMIT/RECEIVE BUFFERS

The PIC18FXX8 has three transmit and two receive buffers, two acceptance masks (one for each receive buffer), and a total of six acceptance filters. Figure 19-1 is a block diagram of these buffers and their connection to the protocol engine.

FIGURE 19-1: CAN BUFFERS AND PROTOCOL ENGINE BLOCK DIAGRAM

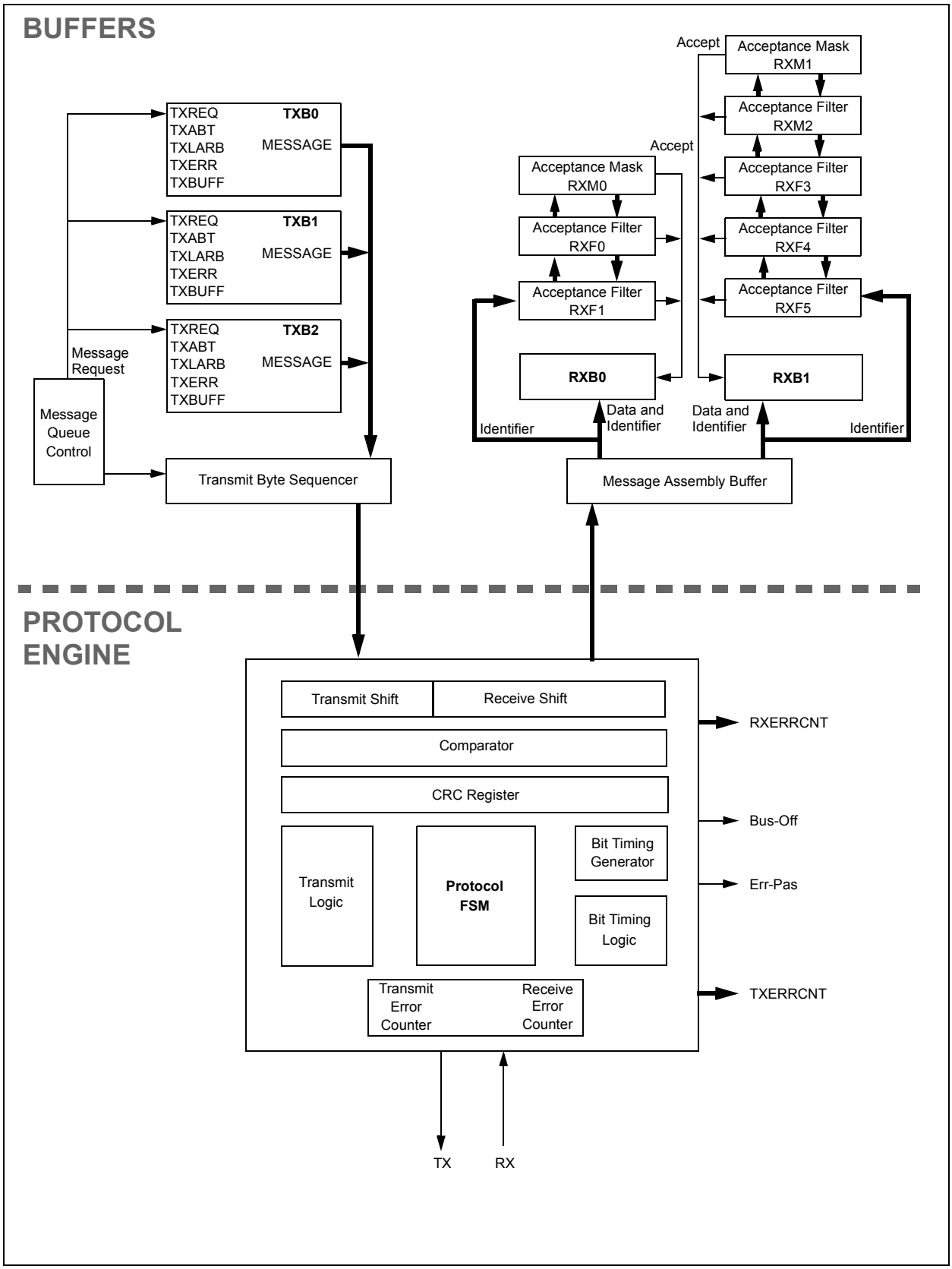

© 2003 Microchip Technology Inc.

19.2 CAN Module Registers

Note:	Not all CAN registers are available in the access bank.

There are many control and data registers associated with the CAN module. For convenience, their descriptions have been grouped into the following sections:

- Control and Status Registers
- Transmit Buffer Registers (Data and Control)
- Receive Buffer Registers (Data and Control)
- Baud Rate Control Registers
- I/O Control Register
- Interrupt Status and Control Registers

19.2.1 CAN CONTROL AND STATUS REGISTERS

The registers described in this section control the overall operation of the CAN module and show its operational status.

REGISTER 19-1: CANCON: CAN CONTROL REGISTER

R/W-1	R/W-0	R/W-0	R/W-0	R/W-0	R/W-0	R/W-0	U-0
REQOP2	REQOP1	REQOP0	ABAT	WIN2	WIN1	WIN0	—
bit 7							bit 0

bit 7-5 **REQOP2:REQOP0:** Request CAN Operation Mode bits
1xx = Request Configuration mode
011 = Request Listen Only mode
010 = Request Loopback mode
001 = Request Disable mode
000 = Request Normal mode

bit 4 **ABAT:** Abort All Pending Transmissions bit
1 = Abort all pending transmissions (in all transmit buffers)
0 = Transmissions proceeding as normal

bit 3-1 **WIN2:WIN0:** Window Address bits
This selects which of the CAN buffers to switch into the access bank area. This allows access to the buffer registers from any data memory bank. After a frame has caused an interrupt, the ICODE3:ICODE0 bits can be copied to the WIN3:WIN0 bits to select the correct buffer. See Example 19-1 for code example.
111 = Receive Buffer 0
110 = Receive Buffer 0
101 = Receive Buffer 1
100 = Transmit Buffer 0
011 = Transmit Buffer 1
010 = Transmit Buffer 2
001 = Receive Buffer 0
000 = Receive Buffer 0

bit 0 **Unimplemented:** Read as ‘0’

Legend:			
R = Readable bit	W = Writable bit	U = Unimplemented bit, read as ‘0’	
- n = Value at POR	‘1’ = Bit is set	‘0’ = Bit is cleared	x = Bit is unknown

REGISTER 19-2: CANSTAT: CAN STATUS REGISTER

R-1	R-0	R-0	U-0	R-0	R-0	R-0	U-0
OPMODE2	OPMODE1	OPMODE0	—	ICODE2	ICODE1	ICODE0	—
bit 7							bit 0

bit 7-5 **OPMODE2:OPMODE0:** Operation Mode Status bits

111 = Reserved
110 = Reserved
101 = Reserved
100 = Configuration mode
011 = Listen Only mode
010 = Loopback mode
001 = Disable mode
000 = Normal mode

Note: Before the device goes into SLEEP mode, select Disable mode.

bit 4 **Unimplemented:** Read as '0'

bit 3-1 **ICODE2:ICODE0:** Interrupt Code bits

When an interrupt occurs, a prioritized coded interrupt value will be present in the ICODE2:ICODE0 bits. These codes indicate the source of the interrupt. The ICODE2:ICODE0 bits can be copied to the WIN2:WIN0 bits to select the correct buffer to map into the Access Bank area. See Example 19-1 for code example.

111 = Wake-up on Interrupt
110 = RXB0 Interrupt
101 = RXB1 Interrupt
100 = TXB0 Interrupt
011 = TXB1 Interrupt
010 = TXB2 Interrupt
001 = Error Interrupt
000 = No Interrupt

bit 0 **Unimplemented:** Read as '0'

Legend:			
R = Readable bit	W = Writable bit	U = Unimplemented bit, read as '0'	
- n = Value at POR	'1' = Bit is set	'0' = Bit is cleared	x = Bit is unknown

© 2003 Microchip Technology Inc.

EXAMPLE 19-1: WIN AND ICODE BITS USAGE IN INTERRUPT SERVICE ROUTINE TO ACCESS TX/RX BUFFERS

```
    ; Save application required context.

    ; Poll interrupt flags and determine source of interrupt

    ; This was found to be CAN interrupt
    ; TempCANCON and TempCANSTAT are variables defined in Access Bank low
    MOVFF   CANCON, TempCANCON            ; Save CANCON.WIN bits
                                          ; This is required to prevent CANCON
                                          ; from corrupting CAN buffer access
                                          ; in-progress while this interrupt
                                          ; occurred

    MOVFF   CANSTAT, TempCANSTAT          ; Save CANSTAT register
                                          ; This is required to make sure that
                                          ; we use same CANSTAT value rather
                                          ; than one changed by another CAN
                                          ; interrupt.

    MOVF    TempCANSTAT, W                ; Retrieve ICODE bits
    ANDLW   b'00001110'
    ADDWF   PCL, F                        ; Perform computed GOTO
                                          ; to corresponding interrupt cause

    BRA     NoInterrupt                   ; 000 = No interrupt
    BRA     ErrorInterrupt                ; 001 = Error interrupt
    BRA     TXB2Interrupt                 ; 010 = TXB2 interrupt
    BRA     TXB1Interrupt                 ; 011 = TXB1 interrupt
    BRA     TXB0Interrupt                 ; 100 = TXB0 interrupt
    BRA     RXB1Interrupt                 ; 101 = RXB1 interrupt
    BRA     RXB0Interrupt                 ; 110 = RXB0 interrupt
                                          ; 111 = Wake-up on interrupt

WakeupInterrupt
    BCF     PIR3, WAKIF                   ; Clear the interrupt flag
    ;
    ; User code to handle wake-up procedure
    ;
    ;
    ; Continue checking for other interrupt source or return from here
    …

NoInterrupt
    …                                     ; PC should never vector here. User may
                                          ; place a trap such as infinite loop or pin/port
                                          ; indication to catch this error.

ErrorInterrupt
    BCF     PIR3, ERRIF                   ; Clear the interrupt flag
    …                                     ; Handle error.
    RETFIE

TXB2Interrupt
    BCF     PIR3, TXB2IF                  ; Clear the interrupt flag
    GOTO    AccessBuffer

TXB1Interrupt
    BCF     PIR3, TXB1IF                  ; Clear the interrupt flag
    GOTO    AccessBuffer

TXB0Interrupt
    BCF     PIR3, TXB0IF                  ; Clear the interrupt flag
    GOTO    AccessBuffer

RXB1Interrupt
    BCF     PIR3, RXB1IF                  ; Clear the interrupt flag
    GOTO    Accessbuffer
```

EXAMPLE 19-1: WIN AND ICODE BITS USAGE IN INTERRUPT SERVICE ROUTINE TO ACCESS TX/RX BUFFERS (CONTINUED)

```
RXB0Interrupt
    BCF     PIR3, RXB0IF                ; Clear the interrupt flag
    GOTO    AccessBuffer

AccessBuffer                            ; This is either TX or RX interrupt
    ; Copy CANCON.ICODE bits to CANSTAT.WIN bits
    MOVF    CANCON, W                   ; Clear CANCON.WIN bits before copying
                                        ; new ones.
    ANDLW   b'11110001'                 ; Use previously saved CANCON value to
                                        ; make sure same value.
    MOVWF   CANCON                      ; Copy masked value back to TempCANCON

    MOVF    TempCANSTAT, W              ; Retrieve ICODE bits
    ANDLW   b'00001110'                 ; Use previously saved CANSTAT value
                                        ; to make sure same value.

    IORWF   CANCON                      ; Copy ICODE bits to WIN bits.
                                        ; Copy the result to actual CANCON

    ; Access current buffer…
    ; User code

    ; Restore CANCON.WIN bits
    MOVF    CANCON, W                   ; Preserve current non WIN bits
    ANDLW   b'11110001'
    IORWF   TempCANCON, W               ; Restore original WIN bits

    MOVWF   CANCON

    ; Do not need to restore CANSTAT - it is read-only register.

    ; Return from interrupt or check for another module interrupt source
```


© 2003 Microchip Technology Inc.

REGISTER 19-3: COMSTAT: COMMUNICATION STATUS REGISTER

R/C-0	R/C-0	R-0	R-0	R-0	R-0	R-0	R-0
RXB0OVFL	RXB1OVFL	TXBO	TXBP	RXBP	TXWARN	RXWARN	EWARN
bit 7							bit 0

bit 7 **RXB0OVFL:** Receive Buffer 0 Overflow bit
1 = Receive Buffer 0 overflowed
0 = Receive Buffer 0 has not overflowed

bit 6 **RXB1OVFL:** Receive Buffer 1 Overflow bit
1 = Receive Buffer 1 overflowed
0 = Receive Buffer 1 has not overflowed

bit 5 **TXBO:** Transmitter Bus-Off bit
1 = Transmit Error Counter > 255
0 = Transmit Error Counter ≤ 255

bit 4 **TXBP:** Transmitter Bus Passive bit
1 = Transmission Error Counter > 127
0 = Transmission Error Counter ≤ 127

bit 3 **RXBP:** Receiver Bus Passive bit
1 = Receive Error Counter > 127
0 = Receive Error Counter ≤ 127

bit 2 **TXWARN:** Transmitter Warning bit
1 = 127 ≥ Transmit Error Counter > 95
0 = Transmit Error Counter ≤ 95

bit 1 **RXWARN:** Receiver Warning bit
1 = 127 ≥ Receive Error Counter > 95
0 = Receive Error Counter ≤ 95

bit 0 **EWARN:** Error Warning bit
This bit is a flag of the RXWARN and TXWARN bits
1 = The RXWARN or the TXWARN bits are set
0 = Neither the RXWARN or the TXWARN bits are set

Legend:			
R = Readable bit	W = Writable bit	C = Clearable bit	U = Unimplemented bit, read as '0'
- n = Value at POR	'1' = Bit is set	'0' = Bit is cleared	x = Bit is unknown

19.2.2 CAN TRANSMIT BUFFER REGISTERS

This section describes the CAN Transmit Buffer registers and their associated control registers.

REGISTER 19-4: TXBnCON: TRANSMIT BUFFER n CONTROL REGISTERS

U-0	R-0	R-0	R-0	R/W-0	U-0	R/W-0	R/W-0
—	TXABT	TXLARB	TXERR	TXREQ	—	TXPRI1	TXPRI0
bit 7							bit 0

bit 7 **Unimplemented:** Read as '0'

bit 6 **TXABT:** Transmission Aborted Status bit
1 = Message was aborted
0 = Message was not aborted

bit 5 **TXLARB:** Transmission Lost Arbitration Status bit
1 = Message lost arbitration while being sent
0 = Message did not lose arbitration while being sent

bit 4 **TXERR:** Transmission Error Detected Status bit
1 = A bus error occurred while the message was being sent
0 = A bus error did not occur while the message was being sent

bit 3 **TXREQ:** Transmit Request Status bit
1 = Requests sending a message. Clears the TXABT, TXLARB, and TXERR bits.
0 = Automatically cleared when the message is successfully sent

Note: Clearing this bit in software while the bit is set, will request a message abort.

bit 2 **Unimplemented:** Read as '0'

bit 1-0 **TXPRI1:TXPRI0:** Transmit Priority bits
11 = Priority Level 3 (Highest Priority)
10 = Priority Level 2
01 = Priority Level 1
00 = Priority Level 0 (Lowest Priority)

Note: These bits set the order in which the Transmit Buffer will be transferred. They do not alter CAN message identifier.

Legend:			
R = Readable bit	W = Writable bit	U = Unimplemented bit, read as '0'	
- n = Value at POR	'1' = Bit is set	'0' = Bit is cleared	x = Bit is unknown

© 2003 Microchip Technology Inc.

REGISTER 19-5: TXBnSIDH: TRANSMIT BUFFER n STANDARD IDENTIFIER, HIGH BYTE REGISTERS

R/W-x	R/W-x	R/W-x	R/W-x	R/W-x	R/W-x	R/W-x	R/W-x
SID10	SID9	SID8	SID7	SID6	SID5	SID4	SID3
bit 7							bit 0

bit 7-0 **SID10:SID3:** Standard Identifier bits, if EXIDE = 0 (TXBnSID Register)
Extended Identifier bits EID28:EID21, if EXIDE = 1

Legend:			
R = Readable bit	W = Writable bit	U = Unimplemented bit, read as '0'	
- n = Value at POR	'1' = Bit is set	'0' = Bit is cleared	x = Bit is unknown

REGISTER 19-6: TXBnSIDL: TRANSMIT BUFFER n STANDARD IDENTIFIER, LOW BYTE REGISTERS

R/W-x	R/W-x	R/W-x	R/W-x	R/W-x	R/W-x	R/W-x	R/W-x
SID2	SID1	SID0	—	EXIDE	—	EID17	EID16
bit 7							bit 0

bit 7-5 **SID2:SID0:** Standard Identifier bits, if EXIDE = 0
Extended Identifier bits EID20:EID18, if EXIDE = 1

bit 4 **Unimplemented:** Read as '0'

bit 3 **EXIDE:** Extended Identifier Enable bit
1 = Message will transmit Extended ID, SID10:SID0 becomes EID28:EID18
0 = Message will transmit Standard ID, EID17:EID0 are ignored

bit 2 **Unimplemented:** Read as '0'

bit 1-0 **EID17:EID16:** Extended Identifier bits

Legend:			
R = Readable bit	W = Writable bit	U = Unimplemented bit, read as '0'	
- n = Value at POR	'1' = Bit is set	'0' = Bit is cleared	x = Bit is unknown

REGISTER 19-7: TXBnEIDH: TRANSMIT BUFFER n EXTENDED IDENTIFIER, HIGH BYTE REGISTERS

R/W-x	R/W-x	R/W-x	R/W-x	R/W-x	R/W-x	R/W-x	R/W-x
EID15	EID14	EID13	EID12	EID11	EID10	EID9	EID8
bit 7							bit 0

bit 7-0 **EID15:EID8:** Extended Identifier bits

Legend:			
R = Readable bit	W = Writable bit	U = Unimplemented bit, read as '0'	
- n = Value at POR	'1' = Bit is set	'0' = Bit is cleared	x = Bit is unknown

REGISTER 19-8: TXBnEIDL: TRANSMIT BUFFER n EXTENDED IDENTIFIER, LOW BYTE REGISTERS

R/W-x	R/W-x	R/W-x	R/W-x	R/W-x	R/W-x	R/W-x	R/W-x
EID7	EID6	EID5	EID4	EID3	EID2	EID1	EID0
bit 7							bit 0

bit 7-0 **EID7:EID0:** Extended Identifier bits

Legend:			
R = Readable bit	W = Writable bit	U = Unimplemented bit, read as '0'	
- n = Value at POR	'1' = Bit is set	'0' = Bit is cleared	x = Bit is unknown

REGISTER 19-9: TXBnDm: TRANSMIT BUFFER n DATA FIELD BYTE m REGISTERS

R/W-x	R/W-x	R/W-x	R/W-x	R/W-x	R/W-x	R/W-x	R/W-x
TXBnDm7	TXBnDm6	TXBnDm5	TXBnDm4	TXBnDm3	TXBnDm2	TXBnDm1	TXBnDm0
bit 7							bit 0

bit 7-0 **TXBnDm7:TXBnDm0:** Transmit Buffer n Data Field Byte m bits (where $0 \leq n < 3$ and $0 < m < 8$)

Each Transmit Buffer has an array of registers. For example, Transmit buffer 0 has 7 registers: TXB0D0 to TXB0D7.

Legend:			
R = Readable bit	W = Writable bit	U = Unimplemented bit, read as '0'	
- n = Value at POR	'1' = Bit is set	'0' = Bit is cleared	x = Bit is unknown

© 2003 Microchip Technology Inc.

REGISTER 19-10: TXBnDLC: TRANSMIT BUFFER n DATA LENGTH CODE REGISTERS

U-0	R/W-x	U-0	U-0	R/W-x	R/W-x	R/W-x	R/W-x
—	TXRTR	—	—	DLC3	DLC2	DLC1	DLC0
bit 7							bit 0

bit 7 **Unimplemented:** Read as '0'

bit 6 **TXRTR:** Transmission Frame Remote Transmission Request bit
1 = Transmitted message will have TXRTR bit set
0 = Transmitted message will have TXRTR bit cleared

bit 5-4 **Unimplemented:** Read as '0'

bit 3-0 **DLC3:DLC0:** Data Length Code bits
1111 = Reserved
1110 = Reserved
1101 = Reserved
1100 = Reserved
1011 = Reserved
1010 = Reserved
1001 = Reserved
1000 = Data Length = 8 bytes
0111 = Data Length = 7 bytes
0110 = Data Length = 6 bytes
0101 = Data Length = 5 bytes
0100 = Data Length = 4 bytes
0011 = Data Length = 3 bytes
0010 = Data Length = 2 bytes
0001 = Data Length = 1 bytes
0000 = Data Length = 0 bytes

Legend:			
R = Readable bit	W = Writable bit	U = Unimplemented bit, read as '0'	
- n = Value at POR	'1' = Bit is set	'0' = Bit is cleared	x = Bit is unknown

REGISTER 19-11: TXERRCNT: TRANSMIT ERROR COUNT REGISTER

R-0	R-0	R-0	R-0	R-0	R-0	R-0	R-0
TEC7	TEC6	TEC5	TEC4	TEC3	TEC2	TEC1	TEC0
bit 7							bit 0

bit 7-0 **TEC7:TEC0:** Transmit Error Counter bits
This register contains a value which is derived from the rate at which errors occur. When the error count overflows, the bus-off state occurs. When the bus has 128 occurrences of 11 consecutive recessive bits, the counter value is cleared.

Legend:			
R = Readable bit	W = Writable bit	U = Unimplemented bit, read as '0'	
- n = Value at POR	'1' = Bit is set	'0' = Bit is cleared	x = Bit is unknown

19.2.3 CAN RECEIVE BUFFER REGISTERS

This section shows the Receive Buffer registers with their associated control registers.

REGISTER 19-12: RXB0CON: RECEIVE BUFFER 0 CONTROL REGISTER

R/C-0	R/W-0	R/W-0	U-0	R-0	R/W-0	R-0	R/W-0
RXFUL(1)	RXM1(1)	RXM0(1)	—	RXRTRRO	RXB0DBEN	JTOFF	FILHIT0
bit 7							bit 0

bit 7 **RXFUL:** Receive Full Status bit(1)
1 = Receive buffer contains a received message
0 = Receive buffer is open to receive a new message

Note: This bit is set by the CAN module and must be cleared by software after the buffer is read.

bit 6-5 **RXM1:RXM0:** Receive Buffer Mode bits(1)
11 = Receive all messages (including those with errors)
10 = Receive only valid messages with extended identifier
01 = Receive only valid messages with standard identifier
00 = Receive all valid messages

bit 4 **Unimplemented:** Read as '0'

bit 3 **RXRTRRO:** Receive Remote Transfer Request Read Only bit
1 = Remote transfer request
0 = No remote transfer request

bit 2 **RXB0DBEN:** Receive Buffer 0 Double-Buffer Enable bit
1 = Receive Buffer 0 overflow will write to Receive Buffer 1
0 = No Receive Buffer 0 overflow to Receive Buffer 1

bit 1 **JTOFF:** Jump Table Offset bit (read only copy of RXB0DBEN)
1 = Allows Jump Table offset between 6 and 7
0 = Allows Jump Table offset between 1 and 0

Note: This bit allows same filter jump table for both RXB0CON and RXB1CON.

bit 0 **FILHIT0:** Filter Hit bit
This bit indicates which acceptance filter enabled the message reception into Receive Buffer 0
1 = Acceptance Filter 1 (RXF1)
0 = Acceptance Filter 0 (RXF0)

Note 1: Bits RXFUL, RXM1 and RXM0 of RXB0CON are not mirrored in RXB1CON.

Legend:			
R = Readable bit	W = Writable bit	C = Clearable bit	U = Unimplemented bit, read as '0'
- n = Value at POR	'1' = Bit is set	'0' = Bit is cleared	x = Bit is unknown

© 2003 Microchip Technology Inc.

REGISTER 19-13: RXB1CON: RECEIVE BUFFER 1 CONTROL REGISTER

R/C-0	R/W-0	R/W-0	U-0	R-0	R-0	R-0	R-0
RXFUL(1)	RXM1(1)	RXM0(1)	—	RXRTRRO	FILHIT2	FILHIT1	FILHIT0
bit 7							bit 0

bit 7 **RXFUL:** Receive Full Status bit(1)

1 = Receive buffer contains a received message
0 = Receive buffer is open to receive a new message

Note: This bit is set by the CAN module and should be cleared by software after the buffer is read.

bit 6-5 **RXM1:RXM0:** Receive Buffer Mode bits(1)

11 = Receive all messages (including those with errors)
10 = Receive only valid messages with extended identifier
01 = Receive only valid messages with standard identifier
00 = Receive all valid messages

bit 4 **Unimplemented:** Read as '0'

bit 3 **RXRTRRO:** Receive Remote Transfer Request bit (read only)

1 = Remote transfer request
0 = No remote transfer request

bit 2-0 **FILHIT2:FILHIT0:** Filter Hit bits

These bits indicate which acceptance filter enabled the last message reception into Receive Buffer 1

111 = Reserved
110 = Reserved
101 = Acceptance Filter 5 (RXF5)
100 = Acceptance Filter 4 (RXF4)
011 = Acceptance Filter 3 (RXF3)
010 = Acceptance Filter 2 (RXF2)
001 = Acceptance Filter 1 (RXF1) only possible when RXB0DBEN bit is set
000 = Acceptance Filter 0 (RXF0) only possible when RXB0DBEN bit is set

Note 1: Bits RXFUL, RXM1 and RXM0 of RXB1CON are not mirrored in RXB0CON.

Legend:			
R = Readable bit	W = Writable bit	C = Clearable bit	U = Unimplemented bit, read as '0'
- n = Value at POR	'1' = Bit is set	'0' = Bit is cleared	x = Bit is unknown

REGISTER 19-14: RXBnSIDH: RECEIVE BUFFER n STANDARD IDENTIFIER, HIGH BYTE REGISTERS

R/W-x	R/W-x	R/W-x	R/W-x	R/W-x	R/W-x	R/W-x	R/W-x
SID10	SID9	SID8	SID7	SID6	SID5	SID4	SID3
bit 7							bit 0

bit 7-0 **SID10:SID3:** Standard Identifier bits, if EXID = 0 (RXBnSIDL Register)
Extended Identifier bits EID28:EID21, if EXID = 1

Legend:			
R = Readable bit	W = Writable bit	U = Unimplemented bit, read as '0'	
- n = Value at POR	'1' = Bit is set	'0' = Bit is cleared	x = Bit is unknown

REGISTER 19-15: RXBnSIDL: RECEIVE BUFFER n STANDARD IDENTIFIER, LOW BYTE REGISTERS

R/W-x	R/W-x	R/W-x	R/W-x	R/W-x	U-0	R/W-x	R/W-x
SID2	SID1	SID0	SRR	EXID	—	EID17	EID16
bit 7							bit 0

bit 7-5 **SID2:SID0:** Standard Identifier bits, if EXID = 0
Extended Identifier bits EID20:EID18, if EXID = 1

bit 4 **SRR:** Substitute Remote Request bit
This bit is always '0' when EXID = 1, or equal to the value of RXRTRRO (RXnBCON<3>) when EXID = 0

bit 3 **EXID:** Extended Identifier bit
1 = Received message is an Extended Data Frame, SID10:SID0 are EID28:EID18
0 = Received message is a Standard Data Frame

bit 2 **Unimplemented:** Read as '0'

bit 1-0 **EID17:EID16:** Extended Identifier bits

Legend:			
R = Readable bit	W = Writable bit	U = Unimplemented bit, read as '0'	
- n = Value at POR	'1' = Bit is set	'0' = Bit is cleared	x = Bit is unknown

REGISTER 19-16: RXBnEIDH: RECEIVE BUFFER n EXTENDED IDENTIFIER, HIGH BYTE REGISTERS

R/W-x	R/W-x	R/W-x	R/W-x	R/W-x	R/W-x	R/W-x	R/W-x
EID15	EID14	EID13	EID12	EID11	EID10	EID9	EID8
bit 7							bit 0

bit 7-0 **EID15:EID8:** Extended Identifier bits

Legend:			
R = Readable bit	W = Writable bit	U = Unimplemented bit, read as '0'	
- n = Value at POR	'1' = Bit is set	'0' = Bit is cleared	x = Bit is unknown

© 2003 Microchip Technology Inc.

REGISTER 19-17: RXBnEIDL: RECEIVE BUFFER n EXTENDED IDENTIFIER, LOW BYTE REGISTERS

R/W-x	R/W-x	R/W-x	R/W-x	R/W-x	R/W-x	R/W-x	R/W-x
EID7	EID6	EID5	EID4	EID3	EID2	EID1	EID0
bit 7							bit 0

bit 7-0 **EID7:EID0:** Extended Identifier bits

Legend:			
R = Readable bit	W = Writable bit	U = Unimplemented bit, read as '0'	
- n = Value at POR	'1' = Bit is set	'0' = Bit is cleared	x = Bit is unknown

REGISTER 19-18: RXBnDLC: RECEIVE BUFFER n DATA LENGTH CODE REGISTERS

U-0	R/W-x	R/W-x	R/W-x	R/W-x	R/W-x	R/W-x	R/W-x
—	RXRTR	RB1	RB0	DLC3	DLC2	DLC1	DLC0
bit 7							bit 0

bit 7 **Unimplemented:** Read as '0'

bit 6 **RXRTR:** Receiver Remote Transmission Request bit
1 = Remote transfer request
0 = No remote transfer request

bit 5 **RB1:** Reserved bit 1
Reserved by CAN Spec and read as '0'

bit 4 **RB0:** Reserved bit 0
Reserved by CAN Spec and read as '0'

bit 3-0 **DLC3:DLC0:** Data Length Code bits
1111 = Invalid
1110 = Invalid
1101 = Invalid
1100 = Invalid
1011 = Invalid
1010 = Invalid
1001 = Invalid
1000 = Data Length = 8 bytes
0111 = Data Length = 7 bytes
0110 = Data Length = 6 bytes
0101 = Data Length = 5 bytes
0100 = Data Length = 4 bytes
0011 = Data Length = 3 bytes
0010 = Data Length = 2 bytes
0001 = Data Length = 1 bytes
0000 = Data Length = 0 bytes

Legend:			
R = Readable bit	W = Writable bit	U = Unimplemented bit, read as '0'	
- n = Value at POR	'1' = Bit is set	'0' = Bit is cleared	x = Bit is unknown

REGISTER 19-19: RXBnDm: RECEIVE BUFFER n DATA FIELD BYTE m REGISTERS

R/W-x	R/W-x	R/W-x	R/W-x	R/W-x	R/W-x	R/W-x	R/W-x
RXBnDm7	RXBnDm6	RXBnDm5	RXBnDm4	RXBnDm3	RXBnDm2	RXBnDm1	RXBnDm0
bit 7							bit 0

bit 7-0 **RXBnDm7:RXBnDm0:** Receive Buffer n Data Field Byte m bits (where $0 \leq n < 1$ and $0 < m < 7$)

Each Receive Buffer has an array of registers. For example, Receive buffer 0 has 8 registers: RXB0D0 to RXB0D7.

Legend:			
R = Readable bit	W = Writable bit	U = Unimplemented bit, read as '0'	
- n = Value at POR	'1' = Bit is set	'0' = Bit is cleared	x = Bit is unknown

REGISTER 19-20: RXERRCNT: RECEIVE ERROR COUNT REGISTER

R-0	R-0	R-0	R-0	R-0	R-0	R-0	R-0
REC7	REC6	REC5	REC4	REC3	REC2	REC1	REC0
bit 7							bit 0

bit 7-0 **REC7:REC0:** Receive Error Counter bits

This register contains the Receive Error value as defined by the CAN specifications.

When RXERRCNT > 127, the module will go into an error passive state. RXERRCNT does not have the ability to put the module in "Bus-Off" state.

Legend:			
R = Readable bit	W = Writable bit	U = Unimplemented bit, read as '0'	
- n = Value at POR	'1' = Bit is set	'0' = Bit is cleared	x = Bit is unknown

© 2003 Microchip Technology Inc.

19.2.3.1 Message Acceptance Filters and Masks

This subsection describes the Message Acceptance filters and masks for the CAN Receive buffers.

REGISTER 19-21: RXFnSIDH: RECEIVE ACCEPTANCE FILTER n STANDARD IDENTIFIER FILTER, HIGH BYTE REGISTERS

R/W-x	R/W-x	R/W-x	R/W-x	R/W-x	R/W-x	R/W-x	R/W-x
SID10	SID9	SID8	SID7	SID6	SID5	SID4	SID3
bit 7							bit 0

bit 7-0 **SID10:SID3:** Standard Identifier Filter bits, if EXIDEN = 0
Extended Identifier Filter bits EID28:EID21, if EXIDEN = 1

Legend:			
R = Readable bit	W = Writable bit	U = Unimplemented bit, read as '0'	
- n = Value at POR	'1' = Bit is set	'0' = Bit is cleared	x = Bit is unknown

REGISTER 19-22: RXFnSIDL: RECEIVE ACCEPTANCE FILTER n STANDARD IDENTIFIER FILTER, LOW BYTE REGISTERS

R/W-x	R/W-x	R/W-x	U-0	R/W-x	U-0	R/W-x	R/W-x
SID2	SID1	SID0	—	EXIDEN	—	EID17	EID16
bit 7							bit 0

bit 7-5 **SID2:SID0:** Standard Identifier Filter bits, if EXIDEN = 0
Extended Identifier Filter bits EID20:EID18, if EXIDEN = 1

bit 4 **Unimplemented:** Read as '0'

bit 3 **EXIDEN:** Extended Identifier Filter Enable bit
1 = Filter will only accept Extended ID messages
0 = Filter will only accept Standard ID messages

bit 2 **Unimplemented:** Read as '0'

bit 1-0 **EID17:EID16:** Extended Identifier Filter bits

Legend:			
R = Readable bit	W = Writable bit	U = Unimplemented bit, read as '0'	
- n = Value at POR	'1' = Bit is set	'0' = Bit is cleared	x = Bit is unknown

REGISTER 19-23: RXFnEIDH: RECEIVE ACCEPTANCE FILTER n EXTENDED IDENTIFIER, HIGH BYTE REGISTERS

R/W-x	R/W-x	R/W-x	R/W-x	R/W-x	R/W-x	R/W-x	R/W-x
EID15	EID14	EID13	EID12	EID11	EID10	EID9	EID8
bit 7							bit 0

bit 7-0 **EID15:EID8:** Extended Identifier Filter bits

Legend:			
R = Readable bit	W = Writable bit	U = Unimplemented bit, read as '0'	
- n = Value at POR	'1' = Bit is set	'0' = Bit is cleared	x = Bit is unknown

REGISTER 19-24: RXFnEIDL: RECEIVE ACCEPTANCE FILTER n EXTENDED IDENTIFIER, LOW BYTE REGISTERS

R/W-x	R/W-x	R/W-x	R/W-x	R/W-x	R/W-x	R/W-x	R/W-x
EID7	EID6	EID5	EID4	EID3	EID2	EID1	EID0
bit 7							bit 0

bit 7-0 **EID7:EID0:** Extended Identifier Filter bits

Legend:			
R = Readable bit	W = Writable bit	U = Unimplemented bit, read as '0'	
- n = Value at POR	'1' = Bit is set	'0' = Bit is cleared	x = Bit is unknown

REGISTER 19-25: RXMnSIDH: RECEIVE ACCEPTANCE MASK n STANDARD IDENTIFIER MASK, HIGH BYTE REGISTERS

R/W-x	R/W-x	R/W-x	R/W-x	R/W-x	R/W-x	R/W-x	R/W-x
SID10	SID9	SID8	SID7	SID6	SID5	SID4	SID3
bit 7							bit 0

bit 7-0 **SID10:SID3:** Standard Identifier Mask bits, or Extended Identifier Mask bits EID28:EID21

Legend:			
R = Readable bit	W = Writable bit	U = Unimplemented bit, read as '0'	
- n = Value at POR	'1' = Bit is set	'0' = Bit is cleared	x = Bit is unknown

© 2003 Microchip Technology Inc.

REGISTER 19-26: RXMnSIDL: RECEIVE ACCEPTANCE MASK n STANDARD IDENTIFIER MASK, LOW BYTE REGISTERS

R/W-x	R/W-x	R/W-x	U-0	U-0	U-0	R/W-x	R/W-x
SID2	SID1	SID0	—	—	—	EID17	EID16
bit 7							bit 0

bit 7-5 **SID2:SID0:** Standard Identifier Mask bits, or Extended Identifier Mask bits EID20:EID18

bit 4-2 **Unimplemented:** Read as '0'

bit 1-0 **EID17:EID16:** Extended Identifier Mask bits

Legend:			
R = Readable bit	W = Writable bit	U = Unimplemented bit, read as '0'	
- n = Value at POR	'1' = Bit is set	'0' = Bit is cleared	x = Bit is unknown

REGISTER 19-27: RXMnEIDH: RECEIVE ACCEPTANCE MASK n EXTENDED IDENTIFIER MASK, HIGH BYTE REGISTERS

R/W-x	R/W-x	R/W-x	R/W-x	R/W-x	R/W-x	R/W-x	R/W-x
EID15	EID14	EID13	EID12	EID11	EID10	EID9	EID8
bit 7							bit 0

bit 7-0 **EID15:EID8:** Extended Identifier Mask bits

Legend:			
R = Readable bit	W = Writable bit	U = Unimplemented bit, read as '0'	
- n = Value at POR	'1' = Bit is set	'0' = Bit is cleared	x = Bit is unknown

REGISTER 19-28: RXMnEIDL: RECEIVE ACCEPTANCE MASK n EXTENDED IDENTIFIER MASK, LOW BYTE REGISTERS

R/W-x	R/W-x	R/W-x	R/W-x	R/W-x	R/W-x	R/W-x	R/W-x
EID7	EID6	EID5	EID4	EID3	EID2	EID1	EID0
bit 7							bit 0

bit 7-0 **EID7:EID0:** Extended Identifier Mask bits

Legend:			
R = Readable bit	W = Writable bit	U = Unimplemented bit, read as '0'	
- n = Value at POR	'1' = Bit is set	'0' = Bit is cleared	x = Bit is unknown

19.2.4 CAN BAUD RATE REGISTERS

This subsection describes the CAN Baud Rate registers.

REGISTER 19-29: BRGCON1: BAUD RATE CONTROL REGISTER 1

R/W-0	R/W-0	R/W-0	R/W-0	R/W-0	R/W-0	R/W-0	R/W-0
SJW1	SJW0	BRP5	BRP4	BRP3	BRP2	BRP1	BRP0
bit 7							bit 0

bit 7-6 **SJW1:SJW0:** Synchronized Jump Width bits
11 = Synchronization Jump Width Time = 4 x TQ
10 = Synchronization Jump Width Time = 3 x TQ
01 = Synchronization Jump Width Time = 2 x TQ
00 = Synchronization Jump Width Time = 1 x TQ

bit 5-0 **BRP5:BRP0:** Baud Rate Prescaler bits
111111 = TQ = (2 x 64)/FOSC
111110 = TQ = (2 x 63)/FOSC
:
:
000001 = TQ = (2 x 2)/FOSC
000000 = TQ = (2 x 1)/FOSC

Legend:			
R = Readable bit	W = Writable bit	U = Unimplemented bit, read as '0'	
- n = Value at POR	'1' = Bit is set	'0' = Bit is cleared	x = Bit is unknown

Note: This register is accessible in Configuration mode only.

© 2003 Microchip Technology Inc.

REGISTER 19-30: BRGCON2: BAUD RATE CONTROL REGISTER 2

R/W-0	R/W-0	R/W-0	R/W-0	R/W-0	R/W-0	R/W-0	R/W-0
SEG2PHTS	SAM	SEG1PH2	SEG1PH1	SEG1PH0	PRSEG2	PRSEG1	PRSEG0
bit 7							bit 0

bit 7 **SEG2PHTS:** Phase Segment 2 Time Select bit
1 = Freely programmable
0 = Maximum of PHEG1 or Information Processing Time (IPT), whichever is greater

bit 6 **SAM:** Sample of the CAN bus Line bit
1 = Bus line is sampled three times prior to the sample point
0 = Bus line is sampled once at the sample point

bit 5-3 **SEG1PH2:SEG1PH0:** Phase Segment 1 bits
111 = Phase Segment 1 Time = 8 x TQ
110 = Phase Segment 1 Time = 7 x TQ
101 = Phase Segment 1 Time = 6 x TQ
100 = Phase Segment 1 Time = 5 x TQ
011 = Phase Segment 1 Time = 4 x TQ
010 = Phase Segment 1 Time = 3 x TQ
001 = Phase Segment 1 Time = 2 x TQ
000 = Phase Segment 1 Time = 1 x TQ

bit 2-0 **PRSEG2:PRSEG0:** Propagation Time Select bits
111 = Propagation Time = 8 x TQ
110 = Propagation Time = 7 x TQ
101 = Propagation Time = 6 x TQ
100 = Propagation Time = 5 x TQ
011 = Propagation Time = 4 x TQ
010 = Propagation Time = 3 x TQ
001 = Propagation Time = 2 x TQ
000 = Propagation Time = 1 x TQ

Legend:			
R = Readable bit	W = Writable bit	U = Unimplemented bit, read as '0'	
- n = Value at POR	'1' = Bit is set	'0' = Bit is cleared	x = Bit is unknown

Note: This register is accessible in Configuration mode only.

REGISTER 19-31: BRGCON3: BAUD RATE CONTROL REGISTER 3

U-0	R/W-0	U-0	U-0	U-0	R/W-0	R/W-0	R/W-0
—	WAKFIL	—	—	—	SEG2PH2(1)	SEG2PH1(1)	SEG2PH0(1)
bit 7							bit 0

bit 7 **Unimplemented:** Read as '0'

bit 6 **WAKFIL:** Selects CAN bus Line Filter for Wake-up bit
1 = Use CAN bus line filter for wake-up
0 = CAN bus line filter is not used for wake-up

bit 5-3 **Unimplemented:** Read as '0'

bit 2-0 **SEG2PH2:SEG2PH0:** Phase Segment 2 Time Select bits(1)
111 = Phase Segment 2 Time = 8 x TQ
110 = Phase Segment 2 Time = 7 x TQ
101 = Phase Segment 2 Time = 6 x TQ
100 = Phase Segment 2 Time = 5 x TQ
011 = Phase Segment 2 Time = 4 x TQ
010 = Phase Segment 2 Time = 3 x TQ
001 = Phase Segment 2 Time = 2 x TQ
000 = Phase Segment 2 Time = 1 x TQ

Note 1: Ignored if SEG2PHTS bit (BRGCON2<7>) is clear.

Legend:			
R = Readable bit	W = Writable bit	U = Unimplemented bit, read as '0'	
- n = Value at POR	'1' = Bit is set	'0' = Bit is cleared	x = Bit is unknown

© 2003 Microchip Technology Inc.

19.2.5 CAN MODULE I/O CONTROL REGISTER

This register controls the operation of the CAN module's I/O pins in relation to the rest of the microcontroller.

REGISTER 19-32: CIOCON: CAN I/O CONTROL REGISTER

U-0	U-0	R/W-0	R/W-0	U-0	U-0	U-0	U-0
—	—	ENDRHI	CANCAP	—	—	—	—
bit 7							bit 0

bit 7-6 **Unimplemented**: Read as '0'

bit 5 **ENDRHI:** Enable Drive High bit

1 = CANTX pin will drive V_{DD} when recessive
0 = CANTX pin will tri-state when recessive

bit 4 **CANCAP:** CAN Message Receive Capture Enable bit

1 = Enable CAN capture, CAN message receive signal replaces input on RC2/CCP1
0 = Disable CAN capture, RC2/CCP1 input to CCP1 module

bit 3-0 **Unimplemented:** Read as '0'

Legend:			
R = Readable bit	W = Writable bit	U = Unimplemented bit, read as '0'	
- n = Value at POR	'1' = Bit is set	'0' = Bit is cleared	x = Bit is unknown

19.2.6 CAN INTERRUPT REGISTERS

The registers in this section are the same as described in Section 8.0. They are duplicated here for convenience.

REGISTER 19-33: PIR3: PERIPHERAL INTERRUPT FLAG REGISTER

R/W-0	R/W-0	R/W-0	R/W-0	R/W-0	R/W-0	R/W-0	R/W-0
IRXIF	WAKIF	ERRIF	TXB2IF	TXB1IF	TXB0IF	RXB1IF	RXB0IF
bit 7							bit 0

bit 7 **IRXIF:** CAN Invalid Received Message Interrupt Flag bit
1 = An invalid message has occurred on the CAN bus
0 = No invalid message on CAN bus

bit 6 **WAKIF:** CAN bus Activity Wake-up Interrupt Flag bit
1 = Activity on CAN bus has occurred
0 = No activity on CAN bus

bit 5 **ERRIF:** CAN bus Error Interrupt Flag bit
1 = An error has occurred in the CAN module (multiple sources)
0 = No CAN module errors

bit 4 **TXB2IF:** CAN Transmit Buffer 2 Interrupt Flag bit
1 = Transmit Buffer 2 has completed transmission of a message and may be reloaded
0 = Transmit Buffer 2 has not completed transmission of a message

bit 3 **TXB1IF:** CAN Transmit Buffer 1 Interrupt Flag bit
1 = Transmit Buffer 1 has completed transmission of a message and may be reloaded
0 = Transmit Buffer 1 has not completed transmission of a message

bit 2 **TXB0IF:** CAN Transmit Buffer 0 Interrupt Flag bit
1 = Transmit Buffer 0 has completed transmission of a message and may be reloaded
0 = Transmit Buffer 0 has not completed transmission of a message

bit 1 **RXB1IF:** CAN Receive Buffer 1 Interrupt Flag bit
1 = Receive Buffer 1 has received a new message
0 = Receive Buffer 1 has not received a new message

bit 0 **RXB0IF:** CAN Receive Buffer 0 Interrupt Flag bit
1 = Receive Buffer 0 has received a new message
0 = Receive Buffer 0 has not received a new message

Legend:			
R = Readable bit	W = Writable bit	U = Unimplemented bit, read as '0'	
- n = Value at POR	'1' = Bit is set	'0' = Bit is cleared	x = Bit is unknown

© 2003 Microchip Technology Inc.

REGISTER 19-34: PIE3: PERIPHERAL INTERRUPT ENABLE REGISTER

R/W-0	R/W-0	R/W-0	R/W-0	R/W-0	R/W-0	R/W-0	R/W-0
IRXIE	WAKIE	ERRIE	TXB2IE	TXB1IE	TXB0IE	RXB1IE	RXB0IE
bit 7							bit 0

bit 7 **IRXIE:** CAN Invalid Received Message Interrupt Enable bit
1 = Enable invalid message received interrupt
0 = Disable invalid message received interrupt

bit 6 **WAKIE:** CAN bus Activity Wake-up Interrupt Enable bit
1 = Enable bus activity wake-up interrupt
0 = Disable bus activity wake-up interrupt

bit 5 **ERRIE:** CAN bus Error Interrupt Enable bit
1 = Enable CAN bus error interrupt
0 = Disable CAN bus error interrupt

bit 4 **TXB2IE:** CAN Transmit Buffer 2 Interrupt Enable bit
1 = Enable Transmit Buffer 2 interrupt
0 = Disable Transmit Buffer 2 interrupt

bit 3 **TXB1IE:** CAN Transmit Buffer 1 Interrupt Enable bit
1 = Enable Transmit Buffer 1 interrupt
0 = Disable Transmit Buffer 1 interrupt

bit 2 **TXB0IE:** CAN Transmit Buffer 0 Interrupt Enable bit
1 = Enable Transmit Buffer 0 interrupt
0 = Disable Transmit Buffer 0 interrupt

bit 1 **RXB1IE:** CAN Receive Buffer 1 Interrupt Enable bit
1 = Enable Receive Buffer 1 interrupt
0 = Disable Receive Buffer 1 interrupt

bit 0 **RXB0IE:** CAN Receive Buffer 0 Interrupt Enable bit
1 = Enable Receive Buffer 0 interrupt
0 = Disable Receive Buffer 0 interrupt

Legend:			
R = Readable bit	W = Writable bit	U = Unimplemented bit, read as ‘0’	
- n = Value at POR	‘1’ = Bit is set	‘0’ = Bit is cleared	x = Bit is unknown

REGISTER 19-35: IPR3: PERIPHERAL INTERRUPT PRIORITY REGISTER

R/W-1	R/W-1	R/W-1	R/W-1	R/W-1	R/W-1	R/W-1	R/W-1
IRXIP	WAKIP	ERRIP	TXB2IP	TXB1IP	TXB0IP	RXB1IP	RXB0IP
bit 7							bit 0

bit 7 **IRXIP:** CAN Invalid Received Message Interrupt Priority bit
1 = High priority
0 = Low priority

bit 6 **WAKIP:** CAN bus Activity Wake-up Interrupt Priority bit
1 = High priority
0 = Low priority

bit 5 **ERRIP:** CAN bus Error Interrupt Priority bit
1 = High priority
0 = Low priority

bit 4 **TXB2IP:** CAN Transmit Buffer 2 Interrupt Priority bit
1 = High priority
0 = Low priority

bit 3 **TXB1IP:** CAN Transmit Buffer 1 Interrupt Priority bit
1 = High priority
0 = Low priority

bit 2 **TXB0IP:** CAN Transmit Buffer 0 Interrupt Priority bit
1 = High priority
0 = Low priority

bit 1 **RXB1IP:** CAN Receive Buffer 1 Interrupt Priority bit
1 = High priority
0 = Low priority

bit 0 **RXB0IP:** CAN Receive Buffer 0 Interrupt Priority bit
1 = High priority
0 = Low priority

Legend:			
R = Readable bit	W = Writable bit	U = Unimplemented bit, read as '0'	
- n = Value at POR	'1' = Bit is set	'0' = Bit is cleared	x = Bit is unknown

© 2003 Microchip Technology Inc.

TABLE 19-1: CAN CONTROLLER REGISTER MAP

Address	Name	Address	Name	Address	Name	Address	Name
F7Fh	—	F5Fh	—	F3Fh	—	F1Fh	RXM1EIDL
F7Eh	—	F5Eh	CANSTATRO1(2)	F3Eh	CANSTATRO3(2)	F1Eh	RXM1EIDH
F7Dh	—	F5Dh	RXB1D7	F3Dh	TXB1D7	F1Dh	RXM1SIDL
F7Ch	—	F5Ch	RXB1D6	F3Ch	TXB1D6	F1Ch	RXM1SIDH
F7Bh	—	F5Bh	RXB1D5	F3Bh	TXB1D5	F1Bh	RXM0EIDL
F7Ah	—	F5Ah	RXB1D4	F3Ah	TXB1D4	F1Ah	RXM0EIDH
F79h	—	F59h	RXB1D3	F39h	TXB1D3	F19h	RXM0SIDL
F78h	—	F58h	RXB1D2	F38h	TXB1D2	F18h	RXM0SIDH
F77h	—	F57h	RXB1D1	F37h	TXB1D1	F17h	RXF5EIDL
F76h	TXERRCNT	F56h	RXB1D0	F36h	TXB1D0	F16h	RXF5EIDH
F75h	RXERRCNT	F55h	RXB1DLC	F35h	TXB1DLC	F15h	RXF5SIDL
F74h	COMSTAT	F54h	RXB1EIDL	F34h	TXB1EIDL	F14h	RXF5SIDH
F73h	CIOCON	F53h	RXB1EIDH	F33h	TXB1EIDH	F13h	RXF4EIDL
F72h	BRGCON3	F52h	RXB1SIDL	F32h	TXB1SIDL	F12h	RXF4EIDH
F71h	BRGCON2	F51h	RXB1SIDH	F31h	TXB1SIDH	F11h	RXF4SIDL
F70h	BRGCON1	F50h	RXB1CON	F30h	TXB1CON	F10h	RXF4SIDH
F6Fh	CANCON	F4Fh	—	F2Fh	—	F0Fh	RXF3EIDL
F6Eh	CANSTAT	F4Eh	CANSTATRO2(2)	F2Eh	CANSTATRO4(2)	F0Eh	RXF3EIDH
F6Dh	RXB0D7	F4Dh	TXB0D7	F2Dh	TXB2D7	F0Dh	RXF3SIDL
F6Ch	RXB0D6	F4Ch	TXB0D6	F2Ch	TXB2D6	F0Ch	RXF3SIDH
F6Bh	RXB0D5	F4Bh	TXB0D5	F2Bh	TXB2D5	F0Bh	RXF2EIDL
F6Ah	RXB0D4	F4Ah	TXB0D4	F2Ah	TXB2D4	F0Ah	RXF2EIDH
F69h	RXB0D3	F49h	TXB0D3	F29h	TXB2D3	F09h	RXF2SIDL
F68h	RXB0D2	F48h	TXB0D2	F28h	TXB2D2	F08h	RXF2SIDH
F67h	RXB0D1	F47h	TXB0D1	F27h	TXB2D1	F07h	RXF1EIDL
F66h	RXB0D0	F46h	TXB0D0	F26h	TXB2D0	F06h	RXF1EIDH
F65h	RXB0DLC	F45h	TXB0DLC	F25h	TXB2DLC	F05h	RXF1SIDL
F64h	RXB0EIDL	F44h	TXB0EIDL	F24h	TXB2EIDL	F04h	RXF1SIDH
F63h	RXB0EIDH	F43h	TXB0EIDH	F23h	TXB2EIDH	F03h	RXF0EIDL
F62h	RXB0SIDL	F42h	TXB0SIDL	F22h	TXB2SIDL	F02h	RXF0EIDH
F61h	RXB0SIDH	F41h	TXB0SIDH	F21h	TXB2SIDH	F01h	RXF0SIDL
F60h	RXB0CON	F40h	TXB0CON	F20h	TXB2CON	F00h	RXF0SIDH

Note 1: Shaded registers are available in Access Bank Low area, while the rest are available in Bank 15.

2: CANSTAT register is repeated in these locations to simplify application firmware. Unique names are given for each instance of the CANSTAT register, due to the Microchip Header file requirement.

19.3 CAN Modes of Operation

The PIC18FXX8 has six main modes of operation:

- Configuration mode
- Disable mode
- Normal Operation mode
- Listen Only mode
- Loopback mode
- Error Recognition mode

All modes, except Error Recognition, are requested by setting the REQOP bits (CANCON<7:5>); Error Recognition is requested through the RXM bits of the Receive Buffer register(s). Entry into a mode is Acknowledged by monitoring the OPMODE bits.

When changing modes, the mode will not actually change until all pending message transmissions are complete. Because of this, the user must verify that the device has actually changed into the requested mode before further operations are executed.

19.3.1 CONFIGURATION MODE

The CAN module has to be initialized before the activation. This is only possible if the module is in the Configuration mode. The Configuration mode is requested by setting REQOP2 bit. Only when the status bit OPMODE2 has a high level, can the initialization be performed. Afterwards, the configuration registers, the acceptance mask registers, and the acceptance filter registers can be written. The module is activated by setting the REQOP control bits to zero.

The module will protect the user from accidentally violating the CAN protocol through programming errors. All registers which control the configuration of the module can not be modified while the module is on-line. The CAN module will not be allowed to enter the Configuration mode while a transmission is taking place. The CONFIG bit serves as a lock to protect the following registers.

- Configuration registers
- Bus Timing registers
- Identifier Acceptance Filter registers
- Identifier Acceptance Mask registers

In the Configuration mode, the module will not transmit or receive. The error counters are cleared and the interrupt flags remain unchanged. The programmer will have access to configuration registers that are access restricted in other modes.

19.3.2 DISABLE MODE

In Disable mode, the module will not transmit or receive. The module has the ability to set the WAKIF bit due to bus activity, however, any pending interrupts will remain and the error counters will retain their value.

If REQOP<2:0> is set to '001', the module will enter the Module Disable mode. This mode is similar to disabling other peripheral modules by turning off the module enables. This causes the module internal clock to stop unless the module is active (i.e., receiving or transmitting a message). If the module is active, the module will wait for 11 recessive bits on the CAN bus, detect that condition as an IDLE bus, then accept the module disable command. OPMODE<2:0> = 001 indicates whether the module successfully went into Module Disable mode.

The WAKIF interrupt is the only module interrupt that is still active in the Module Disable mode. If the WAKIE is set, the processor will receive an interrupt whenever the CAN bus detects a dominant state, as occurs with a SOF. If the processor receives an interrupt while it is sleeping, more than one message may get lost. User firmware must anticipate this condition and request retransmission. If the processor was running while it receives an interrupt, only the first message may get lost.

The I/O pins will revert to normal I/O function when the module is in the Module Disable mode.

19.3.3 NORMAL MODE

This is the standard operating mode of the PIC18FXX8. In this mode, the device actively monitors all bus messages and generates Acknowledge bits, error frames, etc. This is also the only mode in which the PIC18FXX8 will transmit messages over the CAN bus.

19.3.4 LISTEN ONLY MODE

Listen Only mode provides a means for the PIC18FXX8 to receive all messages, including messages with errors. This mode can be used for bus monitor applications, or for detecting the baud rate in 'hot plugging' situations. For auto baud detection, it is necessary that there are at least two other nodes which are communicating with each other. The baud rate can be detected empirically by testing different values until valid messages are received. The Listen Only mode is a silent mode, meaning no messages will be transmitted while in this state, including error flags or Acknowledge signals. The filters and masks can be used to allow only particular messages to be loaded into the receive registers, or the filter masks can be set to all zeros to allow a message with any identifier to pass. The error counters are reset and deactivated in this state. The Listen Only mode is activated by setting the mode request bits in the CANCON register.

© 2003 Microchip Technology Inc.

19.3.5 LOOPBACK MODE

This mode will allow internal transmission of messages from the transmit buffers to the receive buffers, without actually transmitting messages on the CAN bus. This mode can be used in system development and testing. In this mode, the ACK bit is ignored and the device will allow incoming messages from itself, just as if they were coming from another node. The Loopback mode is a silent mode, meaning no messages will be transmitted while in this state, including error flags or Acknowledge signals. The TXCAN pin will revert to port I/O while the device is in this mode. The filters and masks can be used to allow only particular messages to be loaded into the receive registers. The masks can be set to all zeros to provide a mode that accepts all messages. The Loopback mode is activated by setting the mode request bits in the CANCON register.

19.3.6 ERROR RECOGNITION MODE

The module can be set to ignore all errors and receive all message. The Error Recognition mode is activated by setting the RXM<1:0> bits in the RXBnCON registers to '11'. In this mode, all messages, valid or invalid, are received and copied to the receive buffer.

19.4 CAN Message Transmission

19.4.1 TRANSMIT BUFFERS

The PIC18FXX8 implements three Transmit Buffers (Figure 19-2). Each of these buffers occupies 14 bytes of SRAM and are mapped into the device memory map.

For the MCU to have write access to the message buffer, the TXREQ bit must be clear, indicating that the message buffer is clear of any pending message to be transmitted. At a minimum, the TXBnSIDH, TXBnSIDL, and TXBnDLC registers must be loaded. If data bytes are present in the message, the TXBnDm registers must also be loaded. If the message is to use extended identifiers, the TXBnEIDm registers must also be loaded and the EXIDE bit set.

Prior to sending the message, the MCU must initialize the TXInE bit to enable or disable the generation of an interrupt when the message is sent. The MCU must also initialize the TXP priority bits (see Section 19.4.2).

19.4.2 TRANSMIT PRIORITY

Transmit priority is a prioritization within the PIC18FXX8 of the pending transmittable messages. This is independent from, and not related to, any prioritization implicit in the message arbitration scheme built into the CAN protocol. Prior to sending the SOF, the priority of all buffers that are queued for transmission is compared. The transmit buffer with the highest priority will be sent first. If two buffers have the same priority setting, the buffer with the highest buffer number will be sent first. There are four levels of transmit priority. If TXP bits for a particular message buffer are set to '11', that buffer has the highest possible priority. If TXP bits for a particular message buffer are '00', that buffer has the lowest possible priority.

FIGURE 19-2: TRANSMIT BUFFER BLOCK DIAGRAM

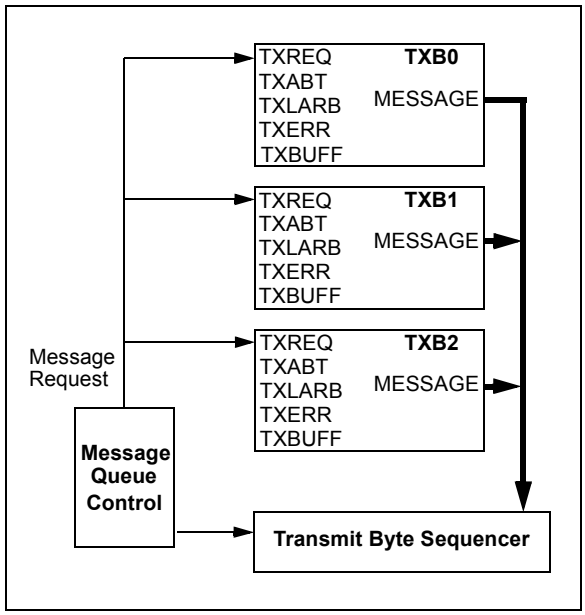

19.4.3 INITIATING TRANSMISSION

To initiate message transmission, the TXREQ bit must be set for each buffer to be transmitted. When TXREQ is set, the TXABT, TXLARB and TXERR bits will be cleared.

Setting the TXREQ bit does not initiate a message transmission, it merely flags a message buffer as ready for transmission. Transmission will start when the device detects that the bus is available. The device will then begin transmission of the highest priority message that is ready.

When the transmission has completed successfully, the TXREQ bit will be cleared, the TXBnIF bit will be set, and an interrupt will be generated if the TXBnIE bit is set.

If the message transmission fails, the TXREQ will remain set, indicating that the message is still pending for transmission and one of the following condition flags will be set. If the message started to transmit but encountered an error condition, the TXERR and the IRXIF bits will be set and an interrupt will be generated. If the message lost arbitration, the TXLARB bit will be set.

19.4.4 ABORTING TRANSMISSION

The MCU can request to abort a message by clearing the TXREQ bit associated with the corresponding message buffer (TXBnCON<3>). Setting the ABAT bit (CANCON<4>) will request an abort of all pending messages. If the message has not yet started transmission, or if the message started, but is interrupted by loss of arbitration or an error, the abort will be processed. The abort is indicated when the module sets the ABT bits for the corresponding buffer (TXBnCON<6>). If the message has started to transmit, it will attempt to transmit the current message fully. If the current message is transmitted fully and is not lost to arbitration or an error, the ABT bit will not be set, because the message was transmitted successfully. Likewise, if a message is being transmitted during an abort request and the message is lost to arbitration or an error, the message will not be retransmitted and the ABT bit will be set, indicating that the message was successfully aborted.

© 2003 Microchip Technology Inc.

FIGURE 19-3: INTERNAL TRANSMIT MESSAGE FLOW CHART

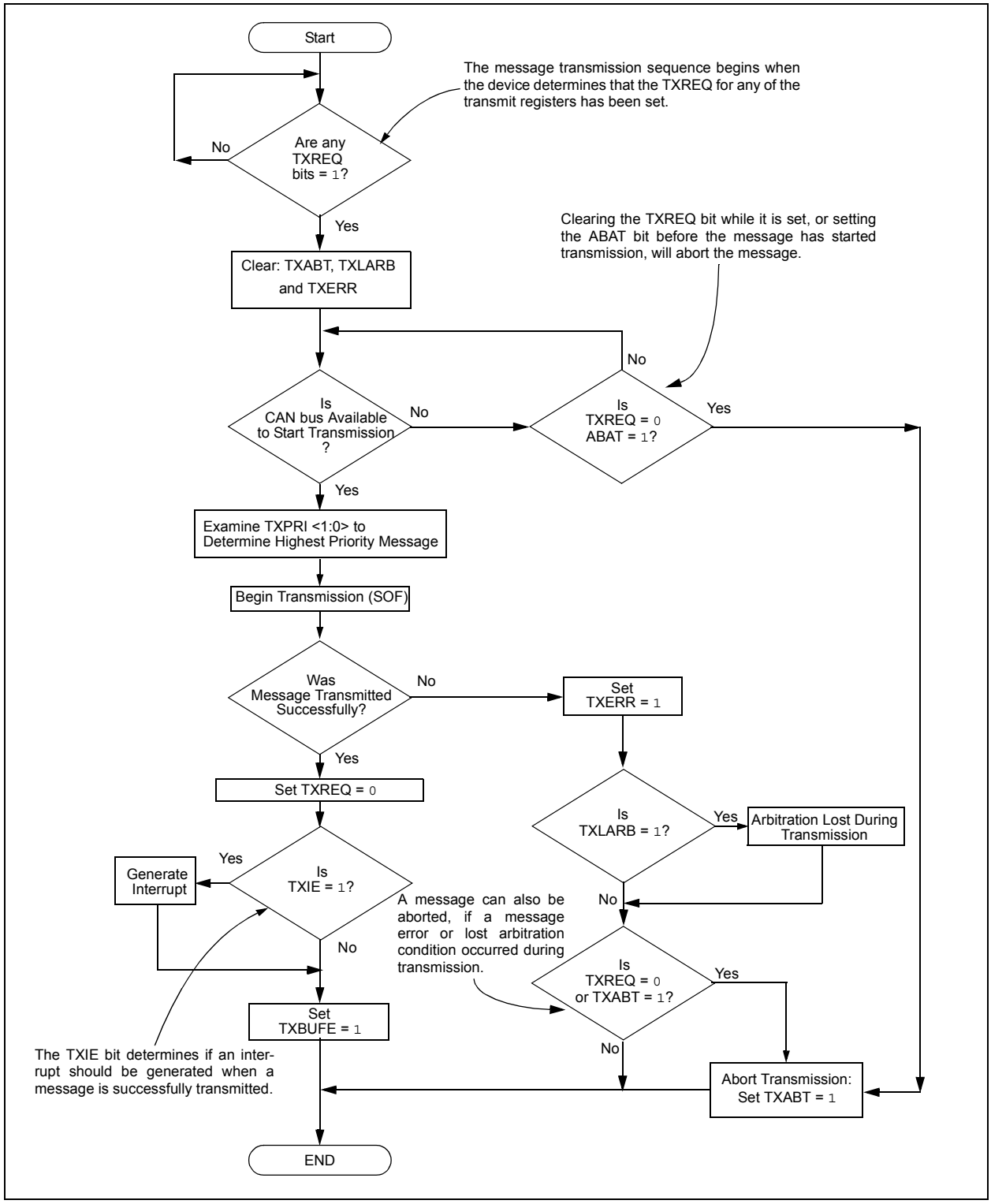

19.5 Message Reception

19.5.1 RECEIVE MESSAGE BUFFERING

The PIC18FXX8 includes two full receive buffers with multiple acceptance filters for each. There is also a separate Message Assembly Buffer (MAB), which acts as a third receive buffer (see Figure 19-4).

19.5.2 RECEIVE BUFFERS

Of the three receive buffers, the MAB is always committed to receiving the next message from the bus. The remaining two receive buffers are called RXB0 and RXB1 and can receive a complete message from the protocol engine. The MCU can access one buffer while the other buffer is available for message reception, or holding a previously received message.

The MAB assembles all messages received. These messages will be transferred to the RXBn buffers, only if the acceptance filter criteria are met.

Note:	The entire contents of the MAB are moved into the receive buffer once a message is accepted. This means that, regardless of the type of identifier (standard or extended) and the number of data bytes received, the entire receive buffer is overwritten with the MAB contents. Therefore, the contents of all registers in the buffer must be assumed to have been modified when any message is received.

When a message is moved into either of the receive buffers, the appropriate RXBnIF bit is set. This bit must be cleared by the MCU when it has completed processing the message in the buffer, in order to allow a new message to be received into the buffer. This bit provides a positive lockout to ensure that the MCU has finished with the message before the PIC18FXX8 attempts to load a new message into the receive buffer. If the RXBnIE bit is set, an interrupt will be generated to indicate that a valid message has been received.

19.5.3 RECEIVE PRIORITY

RXB0 is the higher priority buffer and has two message acceptance filters associated with it. RXB1 is the lower priority buffer and has four acceptance filters associated with it. The lower number of acceptance filters makes the match on RXB0 more restrictive and implies a higher priority for that buffer. Additionally, the RXB0CON register can be configured such that if RXB0 contains a valid message and another valid message is received, an overflow error will not occur and the new message will be moved into RXB1, regardless of the acceptance criteria of RXB1. There are also two programmable acceptance filter masks available, one for each receive buffer (see Section 19.6).

When a message is received, bits <3:0> of the RXBnCON register will indicate the acceptance filter number that enabled reception and whether the received message is a remote transfer request.

The RXM bits set special Receive modes. Normally, these bits are set to '00' to enable reception of all valid messages, as determined by the appropriate acceptance filters. In this case, the determination of whether or not to receive standard or extended messages is determined by the EXIDE bit in the acceptance filter register. If the RXM bits are set to '01' or '10', the receiver will accept only messages with standard or extended identifiers, respectively. If an acceptance filter has the EXIDE bit set, such that it does not correspond with the RXM mode, that acceptance filter is rendered useless. These two modes of RXM bits can be used in systems where it is known that only standard or extended messages will be on the bus. If the RXM bits are set to '11', the buffer will receive all messages, regardless of the values of the acceptance filters. Also, if a message has an error before the end of frame, that portion of the message assembled in the MAB before the error frame, will be loaded into the buffer. This mode has some value in debugging a CAN system and would not be used in an actual system environment.

19.5.4 TIME-STAMPING

The CAN module can be programmed to generate a time-stamp for every message that is received. When enabled, the module generates a capture signal for CCP1, which in turns captures the value of either Timer1 or Timer3. This value can be used as the message time-stamp.

To use the time-stamp capability, the CANCAP bit (CIOCAN<4>) must be set. This replaces the capture input for CCP1 with the signal generated from the CAN module. In addition, CCP1CON<3:0> must be set to '0011' to enable the CCP special event trigger for CAN events.

FIGURE 19-4: RECEIVE BUFFER BLOCK DIAGRAM

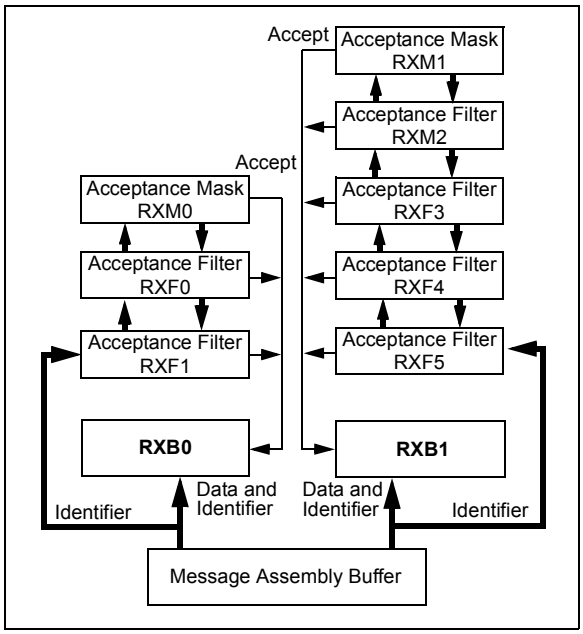

© 2003 Microchip Technology Inc.

FIGURE 19-5: INTERNAL MESSAGE RECEPTION FLOW CHART

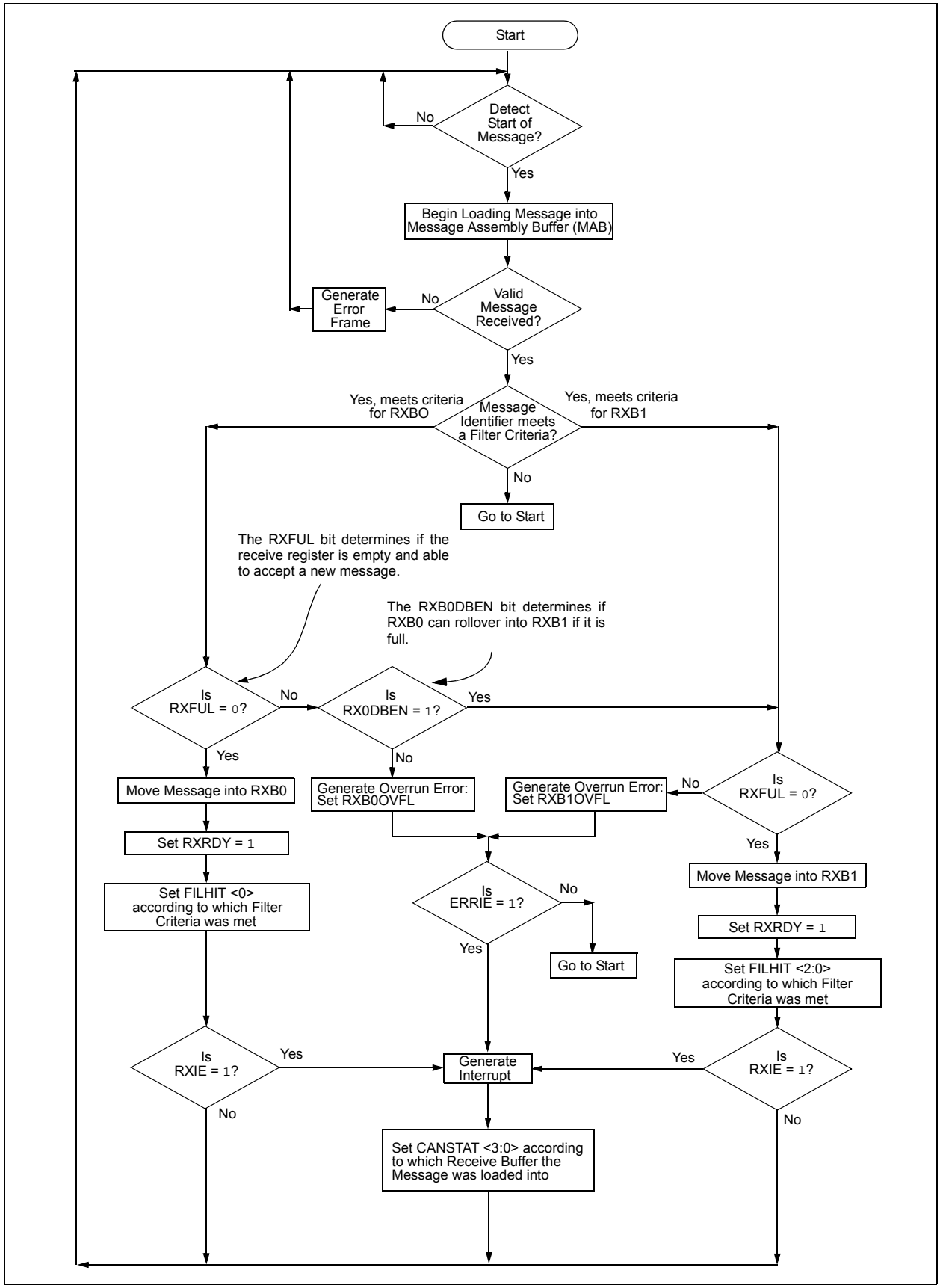

19.6 Message Acceptance Filters and Masks

The Message Acceptance Filters and Masks are used to determine if a message in the message assembly buffer should be loaded into either of the receive buffers. Once a valid message has been received into the MAB, the identifier fields of the message are compared to the filter values. If there is a match, that message will be loaded into the appropriate receive buffer. The filter masks are used to determine which bits in the identifier are examined with the filters. A truth table is shown below in Table 19-2, that indicates how each bit in the identifier is compared to the masks and filters to determine if a message should be loaded into a receive buffer. The mask essentially determines which bits to apply the acceptance filters to. If any mask bit is set to a zero, then that bit will automatically be accepted, regardless of the filter bit.

TABLE 19-2: FILTER/MASK TRUTH TABLE

Mask bit n	Filter bit n	Message Identifier bit n001	Accept or Reject bit n
0	x	x	Accept
1	0	0	Accept
1	0	1	Reject
1	1	0	Reject
1	1	1	Accept

Legend: x = don't care

As shown in the Receive Buffer Block Diagram (Figure 19-4), acceptance filters RXF0 and RXF1, and filter mask RXM0 are associated with RXB0. Filters RXF2, RXF3, RXF4, and RXF5 and mask RXM1 are associated with RXB1. When a filter matches and a message is loaded into the receive buffer, the filter number that enabled the message reception is loaded into the FILHIT bit(s).

For RXB1, the RXB1CON register contains the FILHIT<2:0> bits. They are coded as follows:

- 101 = Acceptance Filter 5 (RXF5)
- 100 = Acceptance Filter 4 (RXF4)
- 011 = Acceptance Filter 3 (RXF3)
- 010 = Acceptance Filter 2 (RXF2)
- 001 = Acceptance Filter 1 (RXF1)
- 000 = Acceptance Filter 0 (RXF0)

Note: '000' and '001' can only occur if the RXB0DBEN bit is set in the RXB0CON register, allowing RXB0 messages to rollover into RXB1.

The coding of the RXB0DBEN bit enables these three bits to be used similarly to the FILHIT bits and to distinguish a hit on filter RXF0 and RXF1, in either RXB0, or after a rollover into RXB1.

- 111 = Acceptance Filter 1 (RXF1)
- 110 = Acceptance Filter 0 (RXF0)
- 001 = Acceptance Filter 1 (RXF1)
- 000 = Acceptance Filter 0

If the RXB0DBEN bit is clear, there are six codes corresponding to the six filters. If the RXB0DBEN bit is set, there are six codes corresponding to the six filters, plus two additional codes corresponding to RXF0 and RXF1 filters that rollover into RXB1.

If more than one acceptance filter matches, the FILHIT bits will encode the binary value of the lowest numbered filter that matched. In other words, if filter RXF2 and filter RXF4 match, FILHIT will be loaded with the value for RXF2. This essentially prioritizes the acceptance filters with a lower number filter having higher priority. Messages are compared to filters in ascending order of filter number.

The mask and filter registers can only be modified when the PIC18FXX8 is in Configuration mode. The mask and filter registers cannot be read outside of Configuration mode. When outside of Configuration mode, all mask and filter registers will be read as '0'.

FIGURE 19-6: MESSAGE ACCEPTANCE MASK AND FILTER OPERATION

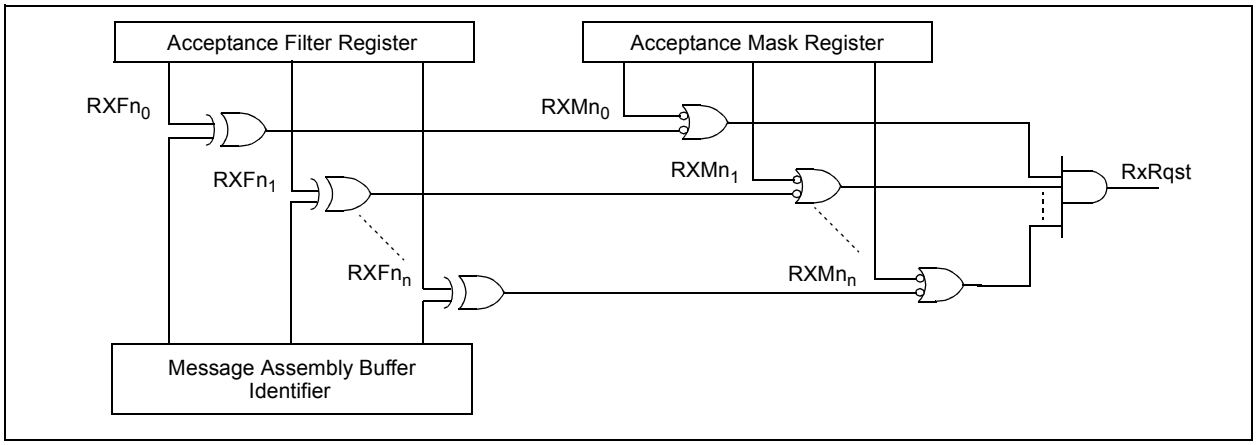

© 2003 Microchip Technology Inc.

19.7 Baud Rate Setting

All nodes on a given CAN bus must have the same nominal bit rate. The CAN protocol uses Non-Return-to-Zero (NRZ) coding, which does not encode a clock within the data stream. Therefore, the receive clock must be recovered by the receiving nodes and synchronized to the transmitters clock.

As oscillators and transmission time may vary from node to node, the receiver must have some type of Phase Lock Loop (PLL) synchronized to data transmission edges to synchronize and maintain the receiver clock. Since the data is NRZ coded, it is necessary to include bit stuffing to ensure that an edge occurs at least every six bit times, to maintain the Digital Phase Lock Loop (DPLL) synchronization.

The bit timing of the PIC18FXX8 is implemented using a DPLL that is configured to synchronize to the incoming data, and provides the nominal timing for the transmitted data. The DPLL breaks each bit time into multiple segments, made up of minimal periods of time called the *Time Quanta* (TQ).

Bus timing functions executed within the bit time frame, such as synchronization to the local oscillator, network transmission delay compensation, and sample point positioning, are defined by the programmable bit timing logic of the DPLL.

All devices on the CAN bus must use the same bit rate. However, all devices are not required to have the same master oscillator clock frequency. For the different clock frequencies of the individual devices, the bit rate has to be adjusted by appropriately setting the baud rate prescaler and number of time quanta in each segment.

The *Nominal Bit Rate* is the number of bits transmitted per second, assuming an ideal transmitter with an ideal oscillator, in the absence of resynchronization. The nominal bit rate is defined to be a maximum of 1 Mb/s.

The *Nominal Bit Time* is defined as:

$$T_{BIT} = 1 / \text{Nominal Bit Rate}$$

The Nominal Bit Time can be thought of as being divided into separate, non-overlapping time segments. These segments (Figure 19-7) include:

- Synchronization Segment (Sync_Seg)
- Propagation Time Segment (Prop_Seg)
- Phase Buffer Segment 1 (Phase_Seg1)
- Phase Buffer Segment 2 (Phase_Seg2)

The time segments (and thus the Nominal Bit Time) are in turn, made up of integer units of time called Time Quanta or TQ (see Figure 19-7). By definition, the nominal bit time is programmable from a minimum of 8 TQ to a maximum of 25 TQ. Also, by definition, the minimum Nominal Bit Time is 1 μs, corresponding to a maximum 1 Mb/s rate. The actual duration is given by the relationship:

$$\text{Nominal Bit Time} = T_Q * (\text{Sync_Seg} + \text{Prop_Seg} + \text{Phase_Seg1} + \text{Phase_Seg2})$$

The Time Quantum is a fixed unit derived from the oscillator period. It is also defined by the programmable baud rate prescaler with integer values from 1 to 64, in addition to a fixed divide-by-two for clock generation. Mathematically, this is

$$T_Q\ (\mu s) = (2 * (BRP+1)) / F_{OSC}\ (MHz)$$

or

$$T_Q\ (\mu s) = (2 * (BRP+1)) * T_{OSC}\ (\mu s)$$

where FOSC is the clock frequency, TOSC is the corresponding oscillator period, and BRP is an integer (0 through 63) represented by the binary values of BRGCON1<5:0>.

FIGURE 19-7: BIT TIME PARTITIONING

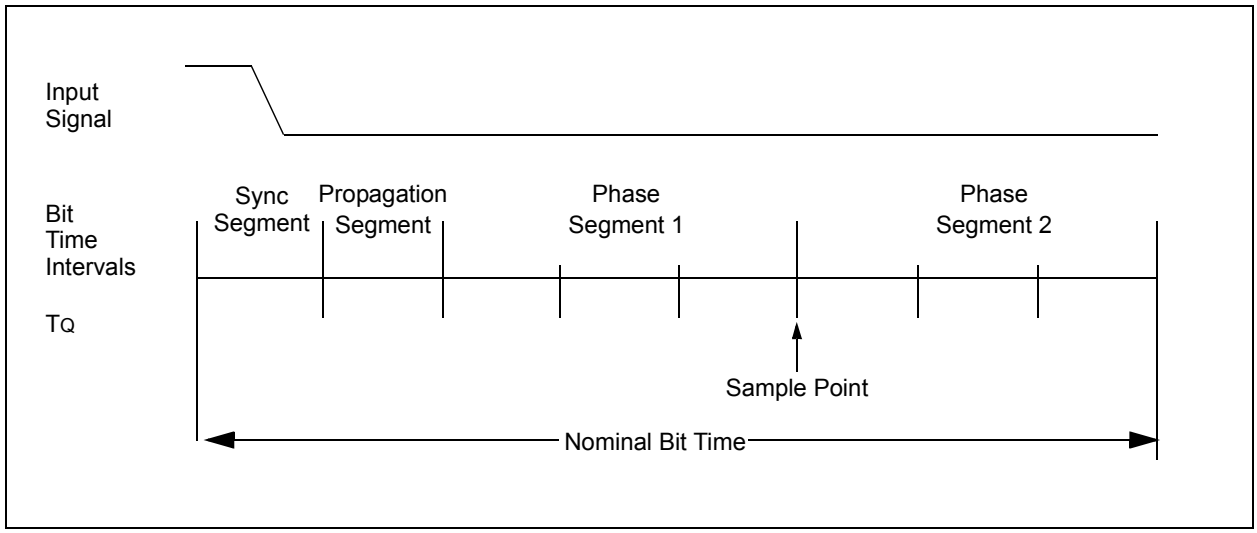

19.7.1 TIME QUANTA

As already mentioned, the Time Quanta is a fixed unit derived from the oscillator period and baud rate prescaler. Its relationship to TBIT and the Nominal Bit Rate is shown in Example 19-2.

EXAMPLE 19-2: CALCULATING TQ, NOMINAL BIT RATE AND NOMINAL BIT TIME

TQ (µs) = (2 * (BRP+1)) / FOSC (MHz)

TBIT (µs) = TQ (µs) * number of TQ per bit interval

Nominal Bit Rate (bits/s) = 1 / TBIT

CASE 1:

For FOSC = 16 MHz, BRP<5:0> = 00h, and Nominal Bit Time = 8 TQ:

TQ = (2*1) / 16 = 0.125 µs (125 ns)

TBIT = 8 * 0.125 = 1 µs (10^{-6}s)

Nominal Bit Rate = 1 / 10^{-6} = 10^{6} bits/s (1 Mb/s)

CASE 2:

For FOSC = 20 MHz, BRP<5:0> = 01h, and Nominal Bit Time = 8 TQ:

TQ = (2*2) / 20 = 0.2 µs (200 ns)

TBIT = 8 * 0.2 = 1.6 µs (1.6 * 10^{-6}s)

Nominal Bit Rate = 1 / 1.6 * 10^{-6}s = 625,000 bits/s (625 Kb/s)

CASE 3:

For FOSC = 25 MHz, BRP<5:0> = 3Fh, and Nominal Bit Time = 25 TQ:

TQ = (2*64) / 25 = 5.12 µs

TBIT = 25 * 5.12 = 128 µs (1.28 * 10^{-4}s)

Nominal Bit Rate = 1 / 1.28 * 10^{-4} = 7813 bits/s (7.8 Kb/s)

The frequencies of the oscillators in the different nodes must be coordinated in order to provide a system wide specified nominal bit time. This means that all oscillators must have a TOSC that is an integral divisor of TQ. It should also be noted that although the number of TQ is programmable from 4 to 25, the usable minimum is 8 TQ. A bit time of less than 8 TQ in length is not guaranteed to operate correctly.

19.7.2 SYNCHRONIZATION SEGMENT

This part of the bit time is used to synchronize the various CAN nodes on the bus. The edge of the input signal is expected to occur during the sync segment. The duration is 1 TQ.

19.7.3 PROPAGATION SEGMENT

This part of the bit time is used to compensate for physical delay times within the network. These delay times consist of the signal propagation time on the bus line and the internal delay time of the nodes. The length of the Propagation Segment can be programmed from 1 TQ to 8 TQ by setting the PRSEG2:PRSEG0 bits.

19.7.4 PHASE BUFFER SEGMENTS

The Phase Buffer Segments are used to optimally locate the sampling point of the received bit, within the nominal bit time. The sampling point occurs between Phase Segment 1 and Phase Segment 2. These segments can be lengthened or shortened by the resynchronization process. The end of Phase Segment 1 determines the sampling point within a bit time. Phase Segment 1 is programmable from 1 TQ to 8 TQ in duration. Phase Segment 2 provides delay before the next transmitted data transition and is also programmable from 1 TQ to 8 TQ in duration. However, due to IPT requirements, the actual minimum length of Phase Segment 2 is 2 TQ, or it may be defined to be equal to the greater of Phase Segment 1 or the Information Processing Time (IPT).

19.7.5 SAMPLE POINT

The Sample Point is the point of time at which the bus level is read and the value of the received bit is determined. The sampling point occurs at the end of Phase Segment 1. If the bit timing is slow and contains many TQ, it is possible to specify multiple sampling of the bus line at the sample point. The value of the received bit is determined to be the value of the majority decision of three values. The three samples are taken at the sample point, and twice before, with a time of TQ/2 between each sample.

19.7.6 INFORMATION PROCESSING TIME

The Information Processing Time (IPT) is the time segment, starting at the sample point, that is reserved for calculation of the subsequent bit level. The CAN specification defines this time to be less than, or equal to 2 TQ. The PIC18FXX8 defines this time to be 2 TQ. Thus, Phase Segment 2 must be at least 2 TQ long.

© 2003 Microchip Technology Inc.

19.8 Synchronization

To compensate for phase shifts between the oscillator frequencies of each of the nodes on the bus, each CAN controller must be able to synchronize to the relevant signal edge of the incoming signal. When an edge in the transmitted data is detected, the logic will compare the location of the edge to the expected time (Sync Seg). The circuit will then adjust the values of Phase Segment 1 and Phase Segment 2, as necessary. There are two mechanisms used for synchronization.

19.8.1 HARD SYNCHRONIZATION

Hard synchronization is only done when there is a recessive to dominant edge during a BUS IDLE condition, indicating the start of a message. After hard synchronization, the bit time counters are restarted with Sync Seg. Hard synchronization forces the edge which has occurred to lie within the synchronization segment of the restarted bit time. Due to the rules of synchronization, if a hard synchronization occurs, there will not be a resynchronization within that bit time.

19.8.2 RESYNCHRONIZATION

As a result of resynchronization, Phase Segment 1 may be lengthened, or Phase Segment 2 may be shortened. The amount of lengthening or shortening of the phase buffer segments has an upper bound given by the Synchronization Jump Width (SJW). The value of the SJW will be added to Phase Segment 1 (see Figure 19-8), or subtracted from Phase Segment 2 (see Figure 19-9). The SJW is programmable between 1 TQ and 4 TQ.

Clocking information will only be derived from recessive to dominant transitions. The property, that only a fixed maximum number of successive bits have the same value, ensures resynchronization to the bit stream during a frame.

The phase error of an edge is given by the position of the edge relative to Sync Seg, measured in TQ. The phase error is defined in magnitude of TQ as follows:

- e = 0 if the edge lies within SYNCESEG.
- e > 0 if the edge lies before the SAMPLE POINT.
- e < 0 if the edge lies after the SAMPLE POINT of the previous bit

If the magnitude of the phase error is less than, or equal to, the programmed value of the synchronization jump width, the effect of a resynchronization is the same as that of a hard synchronization.

If the magnitude of the phase error is larger than the synchronization jump width, and if the phase error is positive, then Phase Segment 1 is lengthened by an amount equal to the synchronization jump width.

If the magnitude of the phase error is larger than the resynchronization jump width, and if the phase error is negative, then Phase Segment 2 is shortened by an amount equal to the synchronization jump width.

19.8.3 SYNCHRONIZATION RULES

- Only one synchronization within one bit time is allowed.
- An edge will be used for synchronization only if the value detected at the previous sample point (previously read bus value) differs from the bus value immediately after the edge.
- All other recessive to dominant edges, fulfilling rules 1 and 2, will be used for resynchronization, with the exception that a node transmitting a dominant bit will not perform a resynchronization as a result of a recessive to dominant edge with a positive phase error.

FIGURE 19-8: LENGTHENING A BIT PERIOD (ADDING SJW TO PHASE SEGMENT 1)

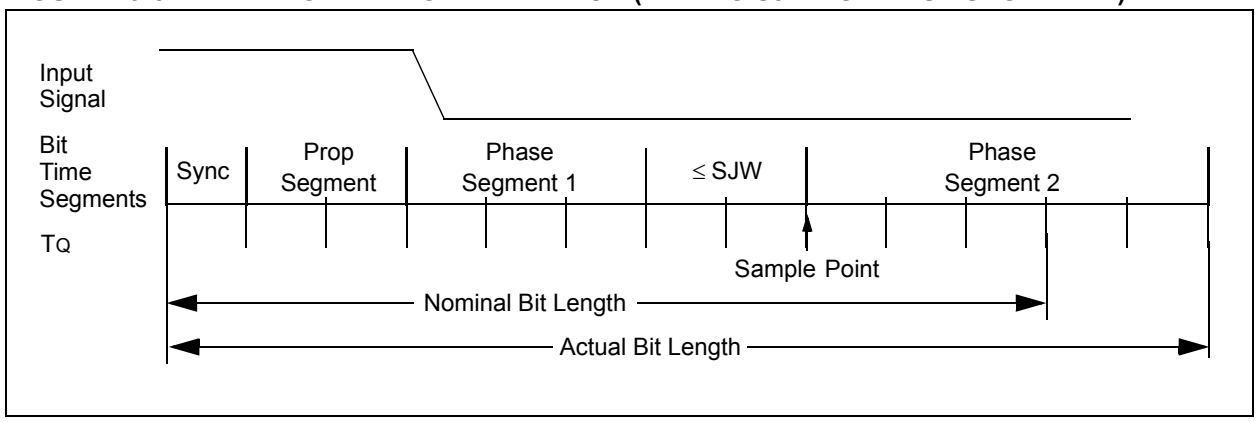

FIGURE 19-9: SHORTENING A BIT PERIOD (SUBTRACTING SJW FROM PHASE SEGMENT 2)

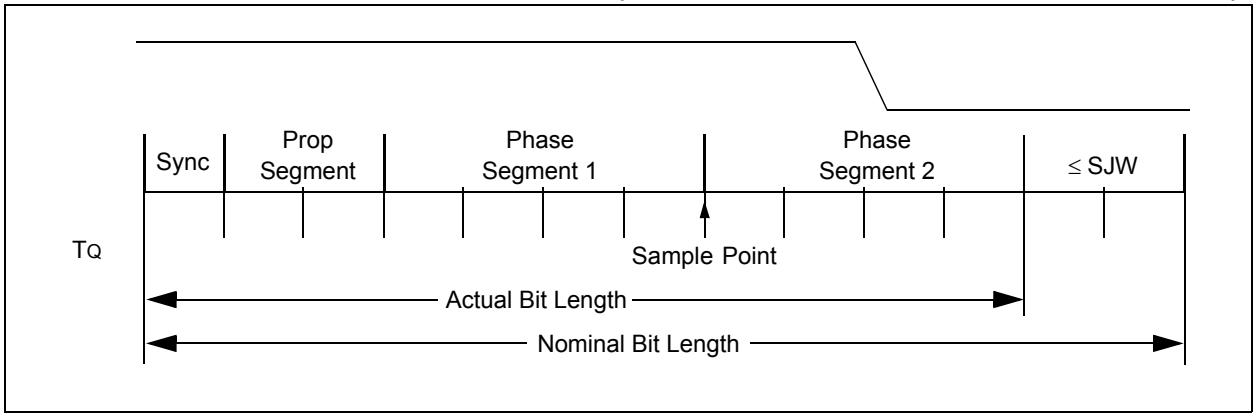

19.9 Programming Time Segments

Some requirements for programming of the time segments:

- Prop Seg + Phase Seg 1 ≥ Phase Seg 2
- Phase Seg 2 ≥ Sync Jump Width

For example, assume that a 125 kHz CAN baud rate is desired, using 20 MHz for FOSC. With a TOSC of 50 ns, a baud rate prescaler value of 04h gives a TQ of 500 ns. To obtain a Nominal Bit Rate of 125 kHz, the Nominal Bit Time must be 8 μs, or 16 TQ.

Using 1 TQ for the Sync Segment, 2 TQ for the Propagation Segment and 7 TQ for Phase Segment 1, would place the sample point at 10 TQ after the transition. This leaves 6 TQ for Phase Segment 2.

By the rules above, the Sync Jump Width could be the maximum of 4 TQ. However, normally a large SJW is only necessary when the clock generation of the different nodes is inaccurate or unstable, such as using ceramic resonators. Typically, an SJW of 1 is enough.

19.10 Oscillator Tolerance

As a rule of thumb, the bit timing requirements allow ceramic resonators to be used in applications with transmission rates of up to 125 Kbit/sec. For the full bus speed range of the CAN protocol, a quartz oscillator is required. A maximum node-to-node oscillator variation of 1.7% is allowed.

19.11 Bit Timing Configuration Registers

The configuration registers (BRGCON1, BRGCON2, BRGCON3) control the bit timing for the CAN bus interface. These registers can only be modified when the PIC18FXX8 is in Configuration mode.

19.11.1 BRGCON1

The BRP bits control the baud rate prescaler. The SJW<1:0> bits select the synchronization jump width in terms of multiples of TQ.

19.11.2 BRGCON2

The PRSEG bits set the length of the Propagation Segment in terms of TQ. The SEG1PH bits set the length of Phase Segment 1 in TQ. The SAM bit controls how many times the RXCAN pin is sampled. Setting this bit to a '1' causes the bus to be sampled three times; twice at TQ/2 before the sample point, and once at the normal sample point (which is at the end of Phase Segment 1). The value of the bus is determined to be the value read during at least two of the samples. If the SAM bit is set to a '0', then the RXCAN pin is sampled only once at the sample point. The SEG2PHTS bit controls how the length of Phase Segment 2 is determined. If this bit is set to a '1', then the length of Phase Segment 2 is determined by the SEG2PH bits of BRGCON3. If the SEG2PHTS bit is set to a '0', then the length of Phase Segment 2 is the greater of Phase Segment 1 and the information processing time (which is fixed at 2 TQ for the PIC18FXX8).

19.11.3 BRGCON3

The PHSEG2<2:0> bits set the length (in TQ) of Phase Segment 2 if the SEG2PHTS bit is set to a '1'. If the SEG2PHTS bit is set to a '0', then the PHSEG2<2:0> bits have no effect.

© 2003 Microchip Technology Inc.

19.12 Error Detection

The CAN protocol provides sophisticated error detection mechanisms. The following errors can be detected.

19.12.1 CRC ERROR

With the Cyclic Redundancy Check (CRC), the transmitter calculates special check bits for the bit sequence, from the start of a frame until the end of the data field. This CRC sequence is transmitted in the CRC field. The receiving node also calculates the CRC sequence using the same formula and performs a comparison to the received sequence. If a mismatch is detected, a CRC error has occurred and an error frame is generated. The message is repeated.

19.12.2 ACKNOWLEDGE ERROR

In the Acknowledge field of a message, the transmitter checks if the Acknowledge slot (which was sent out as a recessive bit) contains a dominant bit. If not, no other node has received the frame correctly. An Acknowledge Error has occurred; an error frame is generated and the message will have to be repeated.

19.12.3 FORM ERROR

If a node detects a dominant bit in one of the four segments, including end of frame, interframe space, Acknowledge delimiter, or CRC delimiter, then a Form Error has occurred and an error frame is generated. The message is repeated.

19.12.4 BIT ERROR

A Bit Error occurs if a transmitter sends a dominant bit and detects a recessive bit, or if it sends a recessive bit and detects a dominant bit, when monitoring the actual bus level and comparing it to the just transmitted bit. In the case where the transmitter sends a recessive bit and a dominant bit is detected during the arbitration field and the Acknowledge slot, no bit error is generated because normal arbitration is occurring.

19.12.5 STUFF BIT ERROR

If, between the start of frame and the CRC delimiter, six consecutive bits with the same polarity are detected, the bit stuffing rule has been violated. A Stuff Bit Error occurs and an error frame is generated. The message is repeated.

19.12.6 ERROR STATES

Detected errors are made public to all other nodes via error frames. The transmission of the erroneous message is aborted and the frame is repeated as soon as possible. Furthermore, each CAN node is in one of the three error states “error-active”, “error-passive” or “bus-off” according to the value of the internal error counters. The error-active state is the usual state, where the bus node can transmit messages and activate error frames (made of dominant bits), without any restrictions. In the error-passive state, messages and passive error frames (made of recessive bits) may be transmitted. The bus-off state makes it temporarily impossible for the station to participate in the bus communication. During this state, messages can neither be received nor transmitted.

19.12.7 ERROR MODES AND ERROR COUNTERS

The PIC18FXX8 contains two error counters: the Receive Error Counter (RXERRCNT), and the Transmit Error Counter (TXERRCNT). The values of both counters can be read by the MCU. These counters are incremented or decremented in accordance with the CAN bus specification.

The PIC18FXX8 is error-active if both error counters are below the error-passive limit of 128. It is error-passive if at least one of the error counters equals or exceeds 128. It goes to bus-off if the transmit error counter equals or exceeds the bus-off limit of 256. The device remains in this state until the bus-off recovery sequence is received. The bus-off recovery sequence consists of 128 occurrences of 11 consecutive recessive bits (see Figure 19-10). Note that the CAN module, after going bus-off, will recover back to error-active without any intervention by the MCU, if the bus remains IDLE for 128 x 11 bit times. If this is not desired, the error Interrupt Service Routine should address this. The current Error mode of the CAN module can be read by the MCU via the COMSTAT register.

Additionally, there is an error state warning flag bit, EWARN, which is set if at least one of the error counters equals or exceeds the error warning limit of 96. EWARN is reset if both error counters are less than the error warning limit.

FIGURE 19-10: ERROR MODES STATE DIAGRAM

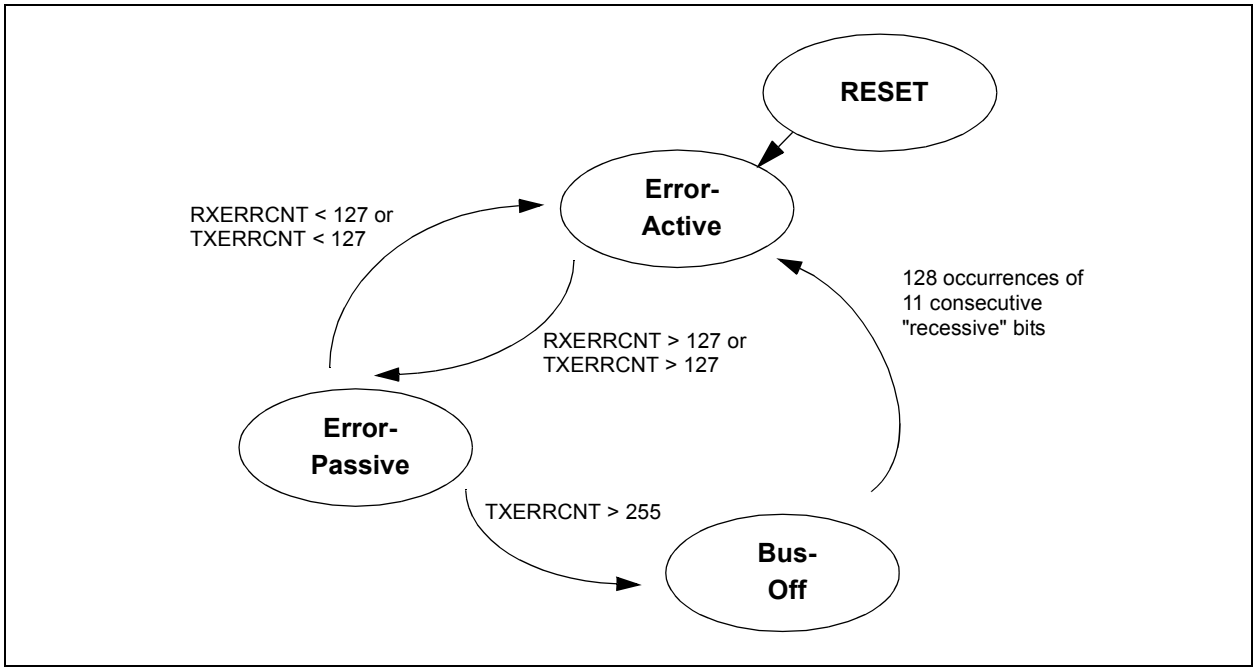

19.13 CAN Interrupts

The module has several sources of interrupts. Each of these interrupts can be individually enabled or disabled. The CANINTF register contains interrupt flags. The CANINTE register contains the enables for the 8 main interrupts. A special set of read only bits in the CANSTAT register, the ICODE bits, can be used in combination with a jump table for efficient handling of interrupts.

All interrupts have one source, with the exception of the Error Interrupt. Any of the Error Interrupt sources can set the Error Interrupt Flag. The source of the Error Interrupt can be determined by reading the Communication Status register, COMSTAT.

The interrupts can be broken up into two categories: receive and transmit interrupts.

The receive related interrupts are:

- Receive Interrupts
- Wake-up Interrupt
- Receiver Overrun Interrupt
- Receiver Warning Interrupt
- Receiver Error-Passive Interrupt

The transmit related interrupts are:

- Transmit Interrupts
- Transmitter Warning Interrupt
- Transmitter Error-Passive Interrupt
- Bus-Off Interrupt

19.13.1 INTERRUPT CODE BITS

The source of a pending interrupt is indicated in the ICODE (interrupt code) bits of the CANSTAT register (ICOD<2:0>). Interrupts are internally prioritized such that the higher priority interrupts are assigned lower ICODE values. Once the highest priority interrupt condition has been cleared, the code for the next highest priority interrupt that is pending (if any), will be reflected by the ICODE bits (see Table 19-3, following page). Note that only those interrupt sources that have their associated CANINTE enable bit set will be reflected in the ICODE bits.

19.13.2 TRANSMIT INTERRUPT

When the Transmit Interrupt is enabled, an interrupt will be generated when the associated transmit buffer becomes empty and is ready to be loaded with a new message. The TXBnIF bit will be set to indicate the source of the interrupt. The interrupt is cleared by the MCU resetting the TXBnIF bit to a ‘0’.

19.13.3 RECEIVE INTERRUPT

When the Receive Interrupt is enabled, an interrupt will be generated when a message has been successfully received and loaded into the associated receive buffer. This interrupt is activated immediately after receiving the EOF field. The RXBnIF bit will be set to indicate the source of the interrupt. The interrupt is cleared by the MCU resetting the RXBnIF bit to a ‘0’.

© 2003 Microchip Technology Inc.

TABLE 19-3: VALUES FOR ICODE<2:0>

ICOD <2:0>	Interrupt	Boolean Expression
000	None	$\overline{ERR}$•$\overline{WAK}$•$\overline{TX0}$•$\overline{TX1}$•$\overline{TX2}$•$\overline{RX0}$•$\overline{RX1}$
001	Error	ERR
010	TXB2	$\overline{ERR}$•$\overline{TX0}$•$\overline{TX1}$•TX2
011	TXB1	$\overline{ERR}$•$\overline{TX0}$•TX1
100	TXB0	$\overline{ERR}$•TX0
101	RXB1	$\overline{ERR}$•$\overline{TX0}$•$\overline{TX1}$•$\overline{TX2}$•$\overline{RX0}$•RX1
110	RXB0	$\overline{ERR}$•$\overline{TX0}$•$\overline{TX1}$•$\overline{TX2}$•RX0
111	Wake on Interrupt	$\overline{ERR}$•$\overline{TX0}$•$\overline{TX1}$•$\overline{TX2}$•$\overline{RX0}$•$\overline{RX1}$•WAK

Key:
ERR = ERRIF * ERRIE RX0 = RXB0IF * RXB0IE
TX0 = TXB0IF * TXB0IE RX1 = RXB1IF * RXB1IE
TX1 = TXB1IF * TXB1IE WAK = WAKIF * WAKIE
TX2 = TXB2IF * TXB2IE

19.13.4 MESSAGE ERROR INTERRUPT

When an error occurs during transmission or reception of a message, the message error flag IRXIF will be set and if the IRXIE bit is set, an interrupt will be generated. This is intended to be used to facilitate baud rate determination when used in conjunction with Listen Only mode.

19.13.5 BUS ACTIVITY WAKE-UP INTERRUPT

When the PIC18FXX8 is in SLEEP mode and the Bus Activity Wake-up Interrupt is enabled, an interrupt will be generated, and the WAKIF bit will be set when activity is detected on the CAN bus. This interrupt causes the PIC18FXX8 to exit SLEEP mode. The interrupt is reset by the MCU, clearing the WAKIF bit.

19.13.6 ERROR INTERRUPT

When the Error Interrupt is enabled, an interrupt is generated if an overflow condition occurs, or if the error state of transmitter or receiver has changed. The error flags in COMSTAT will indicate one of the following conditions.

19.13.6.1 Receiver Overflow

An overflow condition occurs when the MAB has assembled a valid received message (the message meets the criteria of the acceptance filters) and the receive buffer associated with the filter is not available for loading of a new message. The associated COMSTAT.RXnOVFL bit will be set to indicate the overflow condition. This bit must be cleared by the MCU.

19.13.6.2 Receiver Warning

The receive error counter has reached the MCU warning limit of 96.

19.13.6.3 Transmitter Warning

The transmit error counter has reached the MCU warning limit of 96.

19.13.6.4 Receiver Bus Passive

The receive error counter has exceeded the error-passive limit of 127 and the device has gone to error-passive state.

19.13.6.5 Transmitter Bus Passive

The transmit error counter has exceeded the error-passive limit of 127 and the device has gone to error- passive state.

19.13.6.6 Bus-Off

The transmit error counter has exceeded 255 and the device has gone to bus-off state.

19.13.7 INTERRUPT ACKNOWLEDGE

Interrupts are directly associated with one or more status flags in the PIR register. Interrupts are pending as long as one of the flags is set. Once an interrupt flag is set by the device, the flag can not be reset by the microcontroller until the interrupt condition is removed.

NOTES:

© 2003 Microchip Technology Inc.

20.0 COMPATIBLE 10-BIT ANALOG-TO-DIGITAL CONVERTER (A/D) MODULE

The Analog-to-Digital (A/D) Converter module has five inputs for the PIC18F2X8 devices and eight for the PIC18F4X8 devices. This module has the ADCON0 and ADCON1 register definitions that are compatible with the PICmicro® mid-range A/D module.

The A/D allows conversion of an analog input signal to a corresponding 10-bit digital number.

The A/D module has four registers. These registers are:

- A/D Result High Register (ADRESH)
- A/D Result Low Register (ADRESL)
- A/D Control Register 0 (ADCON0)
- A/D Control Register 1 (ADCON1)

The ADCON0 register, shown in Register 20-1, controls the operation of the A/D module. The ADCON1 register, shown in Register 20-2, configures the functions of the port pins.

REGISTER 20-1: ADCON0 REGISTER

R/W-0	R/W-0	R/W-0	R/W-0	R/W-0	R/W-0	U-0	R/W-0
ADCS1	ADCS0	CHS2	CHS1	CHS0	GO/$\overline{\text{DONE}}$	—	ADON
bit 7							bit 0

bit 7-6 **ADCS1:ADCS0:** A/D Conversion Clock Select bits (ADCON0 bits in **bold**)

ADCON1 <ADCS2>	ADCON0 <ADCS1:ADCS0>	Clock Conversion
0	**00**	FOSC/2
0	**01**	FOSC/8
0	**10**	FOSC/32
0	**11**	FRC (clock derived from the internal A/D RC oscillator)
1	**00**	FOSC/4
1	**01**	FOSC/16
1	**10**	FOSC/64
1	**11**	FRC (clock derived from the internal A/D RC oscillator)

bit 5-3 **CHS2:CHS0:** Analog Channel Select bits
000 = Channel 0 (AN0)
001 = Channel 1 (AN1)
010 = Channel 2 (AN2)
011 = Channel 3 (AN3)
100 = Channel 4 (AN4)
101 = Channel 5 (AN5)(1)
110 = Channel 6 (AN6)(1)
111 = Channel 7 (AN7)(1)

Note 1: These channels are unimplemented on PIC18F2X8 (28-pin) devices. Do not select any unimplemented channel.

bit 2 **GO/$\overline{\text{DONE}}$:** A/D Conversion Status bit
When ADON = 1:
1 = A/D conversion in progress (setting this bit starts the A/D conversion which is automatically cleared by hardware when the A/D conversion is complete)
0 = A/D conversion not in progress

bit 1 **Unimplemented:** Read as '0'

bit 0 **ADON:** A/D On bit
1 = A/D converter module is powered up
0 = A/D converter module is shut-off and consumes no operating current

Legend:			
R = Readable bit	W = Writable bit	U = Unimplemented bit, read as '0'	
- n = Value at POR reset	'1' = Bit is set	'0' = Bit is cleared	x = Bit is unknown

REGISTER 20-2: ADCON1 REGISTER

R/W-0	R/W-0	U-0	U-0	R/W-0	R/W-0	R/W-0	R/W-0
ADFM	ADCS2	—	—	PCFG3	PCFG2	PCFG1	PCFG0
bit 7							bit 0

bit 7 **ADFM:** A/D Result Format Select bit

1 = Right justified. Six (6) Most Significant bits of ADRESH are read as '0'.
0 = Left justified. Six (6) Least Significant bits of ADRESL are read as '0'.

bit 6 **ADCS2:** A/D Conversion Clock Select bit (ADCON1 bits in **bold**)

ADCON1 <ADCS2>	**ADCON0 <ADCS1:ADCS0>**	**Clock Conversion**
0	00	FOSC/2
0	01	FOSC/8
0	10	FOSC/32
0	11	FRC (clock derived from the internal A/D RC oscillator)
1	00	FOSC/4
1	01	FOSC/16
1	10	FOSC/64
1	11	FRC (clock derived from the internal A/D RC oscillator)

bit 5-4 **Unimplemented:** Read as '0'

bit 3-0 **PCFG3:PCFG0:** A/D Port Configuration Control bits

PCFG	**AN7**	**AN6**	**AN5**	**AN4**	**AN3**	**AN2**	**AN1**	**AN0**	**VREF+**	**VREF-**	**C / R**
0000	A	A	A	A	A	A	A	A	VDD	VSS	8 / 0
0001	A	A	A	A	VREF+	A	A	A	AN3	VSS	7 / 1
0010	D	D	D	A	A	A	A	A	VDD	VSS	5 / 0
0011	D	D	D	A	VREF+	A	A	A	AN3	VSS	4 / 1
0100	D	D	D	D	A	D	A	A	VDD	VSS	3 / 0
0101	D	D	D	D	VREF+	D	A	A	AN3	VSS	2 / 1
011x	D	D	D	D	D	D	D	D	—	—	0 / 0
1000	A	A	A	A	VREF+	VREF-	A	A	AN3	AN2	6 / 2
1001	D	D	A	A	A	A	A	A	VDD	VSS	6 / 0
1010	D	D	A	A	VREF+	A	A	A	AN3	VSS	5 / 1
1011	D	D	A	A	VREF+	VREF-	A	A	AN3	AN2	4 / 2
1100	D	D	D	A	VREF+	VREF-	A	A	AN3	AN2	3 / 2
1101	D	D	D	D	VREF+	VREF-	A	A	AN3	AN2	2 / 2
1110	D	D	D	D	D	D	D	A	VDD	VSS	1 / 0
1111	D	D	D	D	VREF+	VREF-	D	A	AN3	AN2	1 / 2

A = Analog input D = Digital I/O
C / R = # of analog input channels / # of A/D voltage references

Note: Shaded cells indicate channels available only on PIC18F4X8 devices.

Legend:			
R = Readable bit	W = Writable bit	U = Unimplemented bit, read as '0'	
- n = Value at POR reset	'1' = Bit is set	'0' = Bit is cleared	x = Bit is unknown

Note: On any device RESET, the port pins that are multiplexed with analog functions (ANx) are forced to be analog inputs.

© 2003 Microchip Technology Inc.

The analog reference voltage is software selectable to either the device's positive and negative supply voltage (V_{DD} and V_{SS}), or the voltage level on the RA3/AN3/V_{REF}+ pin and RA2/AN2/V_{REF}- pin.

The A/D converter has a unique feature of being able to operate while the device is in SLEEP mode. To operate in SLEEP, the A/D conversion clock must be derived from the A/D's internal RC oscillator.

The output of the sample and hold is the input into the converter, which generates the result via successive approximation.

A device RESET forces all registers to their RESET state. This forces the A/D module to be turned off and any conversion is aborted.

Each port pin associated with the A/D converter can be configured as an analog input (RA3 can also be a voltage reference), or as a digital I/O.

The ADRESH and ADRESL registers contain the result of the A/D conversion. When the A/D conversion is complete, the result is loaded into the ADRESH/ADRESL registers, the GO/$\overline{\text{DONE}}$ bit (ADCON0<2>) is cleared, and A/D interrupt flag bit, ADIF, is set. The block diagram of the A/D module is shown in Figure 20-1.

FIGURE 20-1: A/D BLOCK DIAGRAM

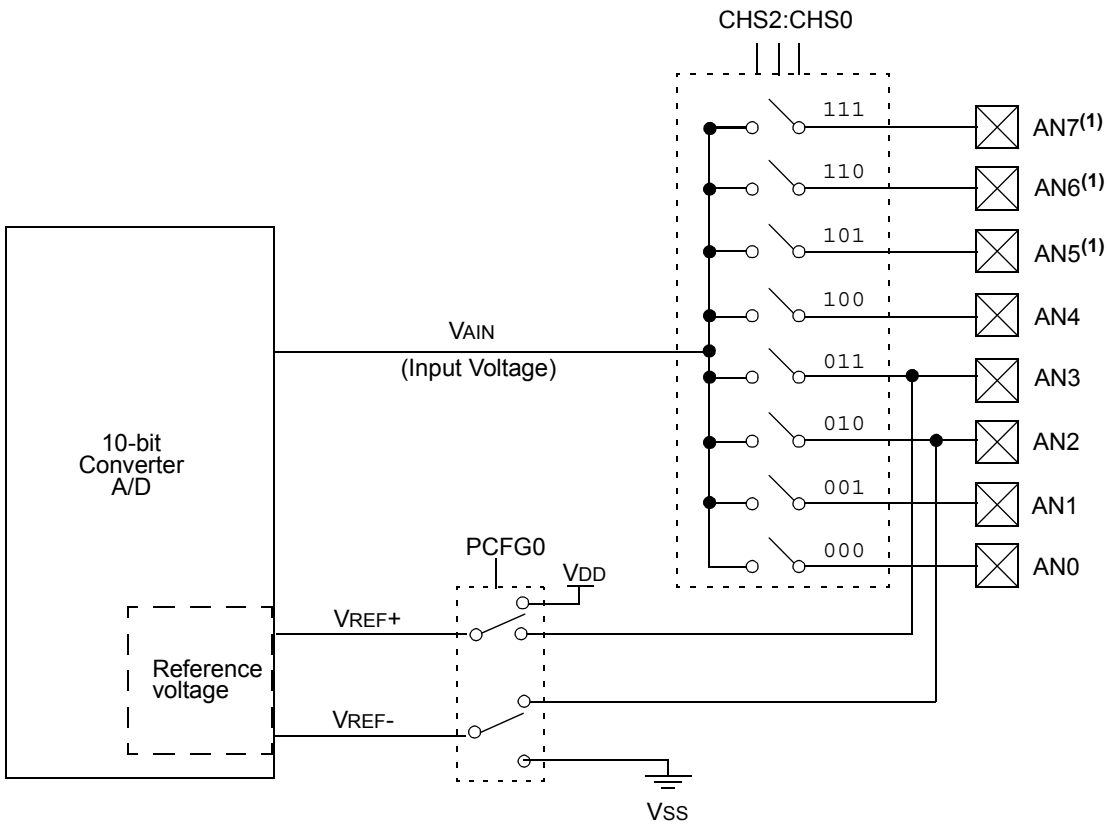

Note 1: Channels AN5 through AN7 are not available on PIC18F2X8 devices.

2: All I/O pins have diode protection to V_{DD} and V_{SS}.

The value that is in the ADRESH/ADRESL registers is not modified for a Power-on Reset. The ADRESH/ADRESL registers will contain unknown data after a Power-on Reset.

After the A/D module has been configured as desired, the selected channel must be acquired before the conversion is started. The analog input channels must have their corresponding TRIS bits selected as an input. To determine acquisition time, see Section 20.1. After this acquisition time has elapsed, the A/D conversion can be started. The following steps should be followed for doing an A/D conversion:

1. Configure the A/D module:
   - Configure analog pins, voltage reference and digital I/O (ADCON1)
   - Select A/D input channel (ADCON0)
   - Select A/D conversion clock (ADCON0)
   - Turn on A/D module (ADCON0)
2. Configure A/D interrupt (if desired):
   - Clear ADIF bit
   - Set ADIE bit
   - Set GIE bit
3. Wait the required acquisition time.
4. Start conversion:
   - Set GO/$\overline{\text{DONE}}$ bit (ADCON0)
5. Wait for A/D conversion to complete, by either:
   - Polling for the GO/$\overline{\text{DONE}}$ bit to be cleared

   OR
   - Waiting for the A/D interrupt
6. Read A/D Result registers (ADRESH/ADRESL); clear bit ADIF if required.
7. For next conversion, go to step 1 or step 2, as required. The A/D conversion time per bit is defined as TAD. A minimum wait of 2 TAD is required before next acquisition starts.

20.1 A/D Acquisition Requirements

For the A/D converter to meet its specified accuracy, the charge holding capacitor (CHOLD) must be allowed to fully charge to the input channel voltage level. The analog input model is shown in Figure 20-2. The source impedance (RS) and the internal sampling switch (RSS) impedance directly affect the time required to charge the capacitor CHOLD. The sampling switch (RSS) impedance varies over the device voltage (VDD). The source impedance affects the offset voltage at the analog input (due to pin leakage current). **The maximum recommended impedance for analog sources is 2.5 kΩ.** After the analog input channel is selected (changed), this acquisition must be done before the conversion can be started.

Note:	When the conversion is started, the holding capacitor is disconnected from the input pin.

FIGURE 20-2: ANALOG INPUT MODEL

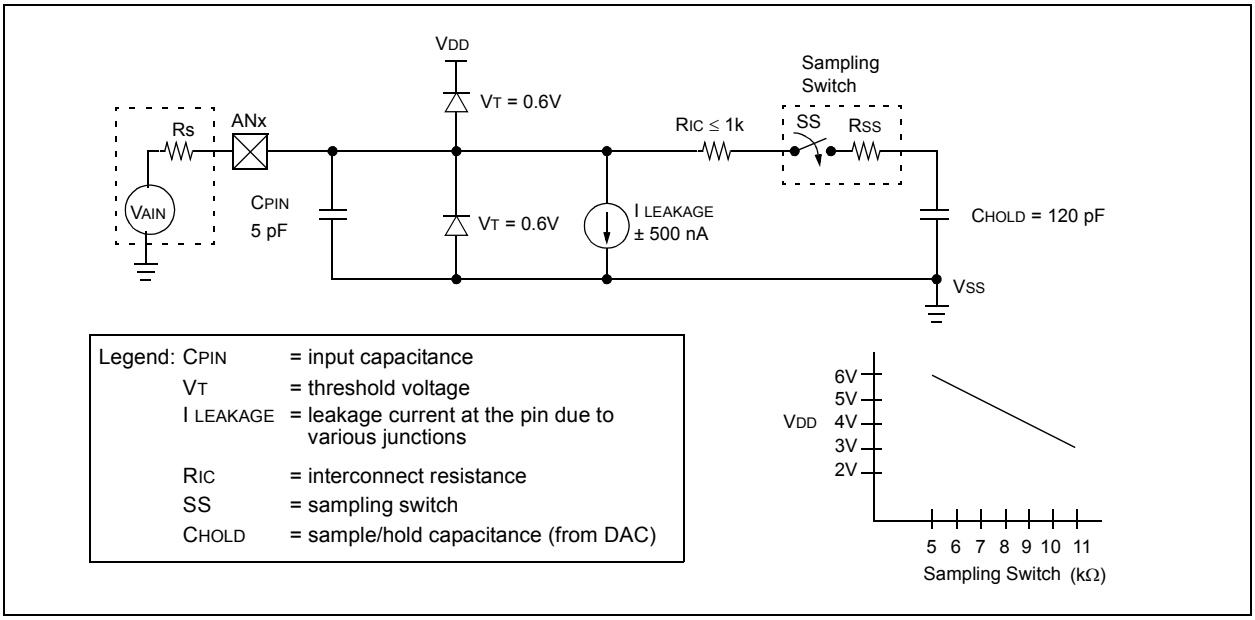

© 2003 Microchip Technology Inc.

To calculate the minimum acquisition time, Equation 20-1 may be used. This equation assumes that 1/2 LSb error is used (1024 steps for the A/D). The 1/2 LSb error is the maximum error allowed for the A/D to meet its specified resolution.

Example 20-1 shows the calculation of the minimum required acquisition time TACQ. This calculation is based on the following application system assumptions:

- CHOLD = 120 pF
- Rs = 2.5 kΩ
- Conversion Error ≤ 1/2 LSb
- VDD = 5V → Rss = 7 kΩ
- Temperature = 50°C (system max.)
- VHOLD = 0V @ time = 0

EQUATION 20-1: ACQUISITION TIME

TACQ	=	Amplifier Settling Time + Holding Capacitor Charging Time + Temperature Coefficient
	=	TAMP + TC + TCOFF

EQUATION 20-2: A/D MINIMUM CHARGING TIME

VHOLD	=	$(V_{REF} - (V_{REF}/2048)) \bullet (1 - e^{(-Tc/C_{HOLD}(R_{IC} + R_{SS} + R_S))})$
or		
Tc	=	-(120 pF)(1 kΩ + RSS + RS) ln(1/2047)

EXAMPLE 20-1: CALCULATING THE MINIMUM REQUIRED ACQUISITION TIME

TACQ	=	TAMP + TC + TCOFF
Temperature coefficient is only required for temperatures > 25°C.		
TACQ	=	2 µs + TC + [(Temp – 25°C)(0.05 µs/°C)]
TC	=	-CHOLD (RIC + RSS + RS) ln(1/2047) -120 pF (1 kΩ + 7 kΩ + 2.5 kΩ) ln(0.0004885) -120 pF (10.5 kΩ) ln(0.0004885) -1.26 µs (-7.6241) 9.61 µs
TACQ	=	2 µs + 9.61 µs + [(50°C – 25°C)(0.05 µs/°C)] 11.61 µs + 1.25 µs 12.86 µs

20.2 Selecting the A/D Conversion Clock

The A/D conversion time per bit is defined as TAD. The A/D conversion requires 12 TAD per 10-bit conversion. The source of the A/D conversion clock is software selectable. The seven possible options for TAD are:

- 2 TOSC
- 4 TOSC
- 8 TOSC
- 16 TOSC
- 32 TOSC
- 64 TOSC
- Internal RC oscillator.

For correct A/D conversions, the A/D conversion clock (TAD) must be selected to ensure a minimum TAD time of 1.6 μs.

Table 20-1 shows the resultant TAD times derived from the device operating frequencies and the A/D clock source selected.

20.3 Configuring Analog Port Pins

The ADCON1, TRISA and TRISE registers control the operation of the A/D port pins. The port pins that are desired as analog inputs must have their corresponding TRIS bits set (input). If the TRIS bit is cleared (output), the digital output level (VOH or VOL) will be converted.

The A/D operation is independent of the state of the CHS2:CHS0 bits and the TRIS bits.

Note 1: When reading the port register, all pins configured as analog input channels will read as cleared (a low level). Pins configured as digital inputs will convert an analog input. Analog levels on a digitally configured input will not affect the conversion accuracy.

2: Analog levels on any pin that is defined as a digital input (including the AN4:AN0 pins) may cause the input buffer to consume current that is out of the devices specification.

TABLE 20-1: TAD vs. DEVICE OPERATING FREQUENCIES

AD Clock Source (TAD)		Device Frequency			
Operation	**ADCS2:ADCS0**	**20 MHz**	**5 MHz**	**1.25 MHz**	**333.33 kHz**
2 TOSC	000	100 ns(2)	400 ns(2)	1.6 μs	6 μs
4 TOSC	100	200 ns(2)	800 ns(2)	3.2 μs	12 μs
8 TOSC	001	400 ns(2)	1.6 μs	6.4 μs	24 μs(3)
16 TOSC	101	800 ns(2)	3.2 μs	12.8 μs	48 μs(3)
32 TOSC	010	1.6 μs	6.4 μs	25.6 μs(3)	96 μs(3)
64 TOSC	110	3.2 μs	12.8 μs	51.2 μs(3)	192 μs(3)
RC	011	2 - 6 μs(1)	2 - 6 μs(1)	2 - 6 μs(1)	2 - 6 μs(1)

Legend: Shaded cells are outside of recommended range.

Note 1: The RC source has a typical TAD time of 4 μs.

2: These values violate the minimum required TAD time.

3: For faster conversion times, the selection of another clock source is recommended.

TABLE 20-2: TAD vs. DEVICE OPERATING FREQUENCIES (FOR EXTENDED, LC DEVICES)

AD Clock Source (TAD)		Device Frequency			
Operation	**ADCS2:ADCS0**	**4 MHz**	**2 MHz**	**1.25 MHz**	**333.33 kHz**
2 TOSC	000	500 ns(2)	1.0 μs(2)	1.6 μs(2)	6 μs
4 TOSC	100	1.0 μs(2)	2.0 μs(2)	3.2 μs(2)	12 μs
8 TOSC	001	2.0 μs(2)	4.0 μs	6.4 μs	24 μs(3)
16 TOSC	101	4.0 μs(2)	8.0 μs	12.8 μs	48 μs(3)
32 TOSC	010	8.0 μs	16.0 μs	25.6 μs(3)	96 μs(3)
64 TOSC	110	16.0 μs	32.0 μs	51.2 μs(3)	192 μs(3)
RC	011	3 - 9 μs(1,4)	3 - 9 μs(1,4)	3 - 9 μs(1,4)	3 - 9 μs(1,4)

Legend: Shaded cells are outside of recommended range.

Note 1: The RC source has a typical TAD time of 6 μs.

2: These values violate the minimum required TAD time.

3: For faster conversion times, the selection of another clock source is recommended.

© 2003 Microchip Technology Inc.

20.4 A/D Conversions

Figure 20-4 shows the operation of the A/D converter after the GO bit has been set. Clearing the GO/$\overline{\text{DONE}}$ bit during a conversion will abort the current conversion. The A/D result register pair will NOT be updated with the partially completed A/D conversion sample. That is, the ADRESH:ADRESL registers will continue to contain the value of the last completed conversion (or the last value written to the ADRESH:ADRESL registers). After the A/D conversion is aborted, a 2 TAD wait is required before the next acquisition is started. After this 2 TAD wait, acquisition on the selected channel is automatically started.

Note:	The GO/$\overline{\text{DONE}}$ bit should **NOT** be set in the same instruction that turns on the A/D.

20.4.1 A/D RESULT REGISTERS

The ADRESH:ADRESL register pair is the location where the 10-bit A/D result is loaded at the completion of the A/D conversion. This register pair is 16-bits wide. The A/D module gives the flexibility to left or right justify the 10-bit result in the 16-bit result register. The A/D Format Select bit (ADFM) controls this justification. Figure 20-3 shows the operation of the A/D result justification. The extra bits are loaded with '0's. When an A/D result will not overwrite these locations (A/D disable), these registers may be used as two general purpose 8-bit registers.

FIGURE 20-3: A/D RESULT JUSTIFICATION

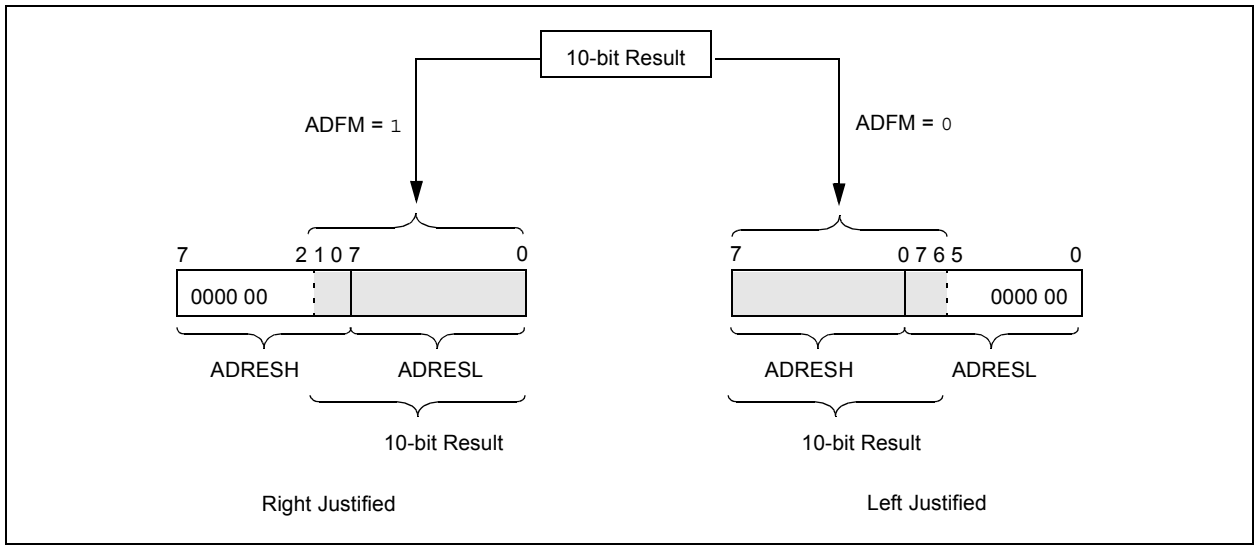

20.5 Use of the ECCP Trigger

An A/D conversion can be started by the "special event trigger" of the ECCP module. This requires that the ECCP1M3:ECCP1M0 bits (ECCP1CON<3:0>) be programmed as '1011' and that the A/D module is enabled (ADON bit is set). When the trigger occurs, the GO/$\overline{\text{DONE}}$ bit will be set, starting the A/D conversion and the Timer1 (or Timer3) counter will be reset to zero. Timer1 (or Timer3) is reset to automatically repeat the A/D acquisition period with minimal software overhead (moving ADRESH/ADRESL to the desired location). The appropriate analog input channel must be selected and the minimum acquisition done before the "special event trigger" sets the GO/$\overline{\text{DONE}}$ bit (starts a conversion).

If the A/D module is not enabled (ADON is cleared), the "special event trigger" will be ignored by the A/D module, but will still reset the Timer1 (or Timer3) counter.

FIGURE 20-4: A/D CONVERSION TAD CYCLES

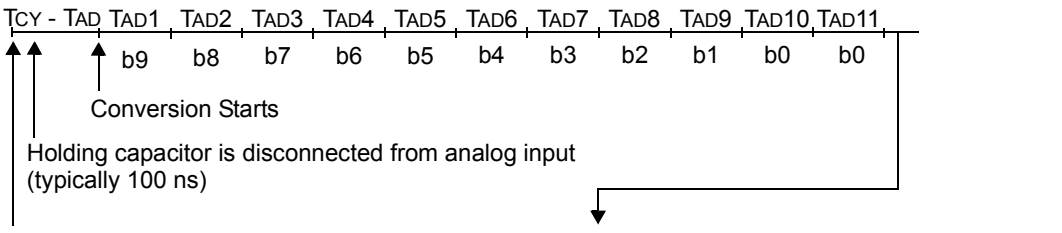

TABLE 20-3: SUMMARY OF A/D REGISTERS

Name	Bit 7	Bit 6	Bit 5	Bit 4	Bit 3	Bit 2	Bit 1	Bit 0	Value on POR, BOR	Value on all other RESETS
INTCON	GIE/GIEH	PEIE/GIEL	TMR0IE	INT0IE	RBIE	TMR0IF	INT0IF	RBIF	0000 000x	0000 000u
PIR1	PSPIF(1)	ADIF	RCIF	TXIF	SSPIF	CCP1IF	TMR2IF	TMR1IF	0000 0000	0000 0000
PIE1	PSPIE(1)	ADIE	RCIE	TXIE	SSPIE	CCP1IE	TMR2IE	TMR1IE	0000 0000	0000 0000
IPR1	PSPIP(1)	ADIP	RCIP	TXIP	SSPIP	CCP1IP	TMR2IP	TMR1IP	1111 1111	1111 1111
PIR2	—	CMIF(1)	—	EEIF	BCLIF	LVDIF	TMR3IF	ECCP1IF(1)	-0-0 0000	-0-0 0000
PIE2	—	CMIE(1)	—	EEIE	BCLIE	LVDIE	TMR3IE	ECCP1IE(1)	-0-0 0000	-0-0 0000
IPR2	—	CMIP(1)	—	EEIP	BCLIP	LVDIP	TMR3IP	ECCP1IP(1)	-1-1 1111	-1-1 1111
ADRESH	A/D Result Register								xxxx xxxx	uuuu uuuu
ADRESL	A/D Result Register								xxxx xxxx	uuuu uuuu
ADCON0	ADCS1	ADCS0	CHS2	CHS1	CHS0	GO/$\overline{\text{DONE}}$	—	ADON	0000 00-0	0000 00-0
ADCON1	ADFM	ADCS2	—	—	PCFG3	PCFG2	PCFG1	PCFG0	00-- 0000	00-- 0000
PORTA	—	RA6	RA5	RA4	RA3	RA2	RA1	RA0	-00x 0000	-00u 0000
TRISA	—	PORTA Data Direction Register							-111 1111	-111 1111
PORTE	—	—	—	—	—	RE2	RE1	RE0	---- -000	---- -000
LATE	—	—	—	—	—	LATE2	LATE1	LATE0	---- -xxx	---- -uuu
TRISE	IBF	OBF	IBOV	PSPMODE	—	TRISE2	TRISE1	TRISE0	0000 -111	0000 -111

Legend: x = unknown, u = unchanged, - = unimplemented, read as '0'. Shaded cells are not used for A/D conversion.
Note 1: These bits are reserved on PIC18F2X8 devices; always maintain these bits clear.

© 2003 Microchip Technology Inc.

21.0 COMPARATOR MODULE

Note:	The analog comparators are only available on the PIC18F448 and PIC18F458.

The comparator module contains two analog comparators. The inputs to the comparators are multiplexed with the RD0 through RD3 pins. The On-Chip Voltage Reference (Section 22.0) can also be an input to the comparators.

The CMCON register, shown in Register 21-1, controls the comparator input and output multiplexers. A block diagram of the comparator is shown in Figure 21-1.

REGISTER 21-1: CMCON REGISTER

R-0	R-0	R/W-0	R/W-0	R/W-0	R/W-0	R/W-0	R/W-0
C2OUT	C1OUT	C2INV	C1INV	CIS	CM2	CM1	CM0
bit 7							bit 0

bit 7 **C2OUT**: Comparator 2 Output bit
When C2INV = 0:
1 = C2 VIN+ > C2 VIN-
0 = C2 VIN+ < C2 VIN-
When C2INV = 1:
1 = C2 VIN+ < C2 VIN-
0 = C2 VIN+ > C2 VIN-

bit 6 **C1OUT**: Comparator 1 Output bit
When C1INV = 0:
1 = C1 VIN+ > C1 VIN-
0 = C1 VIN+ < C1 VIN-
When C1INV = 1:
1 = C1 VIN+ < C1 VIN-
0 = C1 VIN+ > C1 VIN-

bit 5 **C2INV**: Comparator 2 Output Inversion bit
1 = C2 output inverted
0 = C2 output not inverted

bit 4 **C1INV**: Comparator 1 Output Inversion bit
1 = C1 output inverted
0 = C1 output not inverted

bit 3 **CIS**: Comparator Input Switch bit
When CM2:CM0 = 110:
1 = C1 VIN- connects to RD0/PSP0
C2 VIN- connects to RD2/PSP2
0 = C1 VIN- connects to RD1/PSP1
C2 VIN- connects to RD3/PSP3

bit 2-0 **CM2:CM0**: Comparator Mode bits
Figure 21-1 shows the Comparator modes and CM2:CM0 bit settings

Legend:			
R = Readable bit	W = Writable bit	U = Unimplemented bit, read as '0'	
- n = Value at POR	'1' = Bit is set	'0' = Bit is cleared	x = Bit is unknown

21.1 Comparator Configuration

There are eight modes of operation for the comparators. The CMCON register is used to select these modes. Figure 21-1 shows the eight possible modes. The TRISD register controls the data direction of the comparator pins for each mode. If the Comparator mode is changed, the comparator output level may not be valid for the specified mode change delay, shown in Electrical Specifications (Section 27.0).

Note:	Comparator interrupts should be disabled during a Comparator mode change. Otherwise, a false interrupt may occur.

FIGURE 21-1: COMPARATOR I/O OPERATING MODES

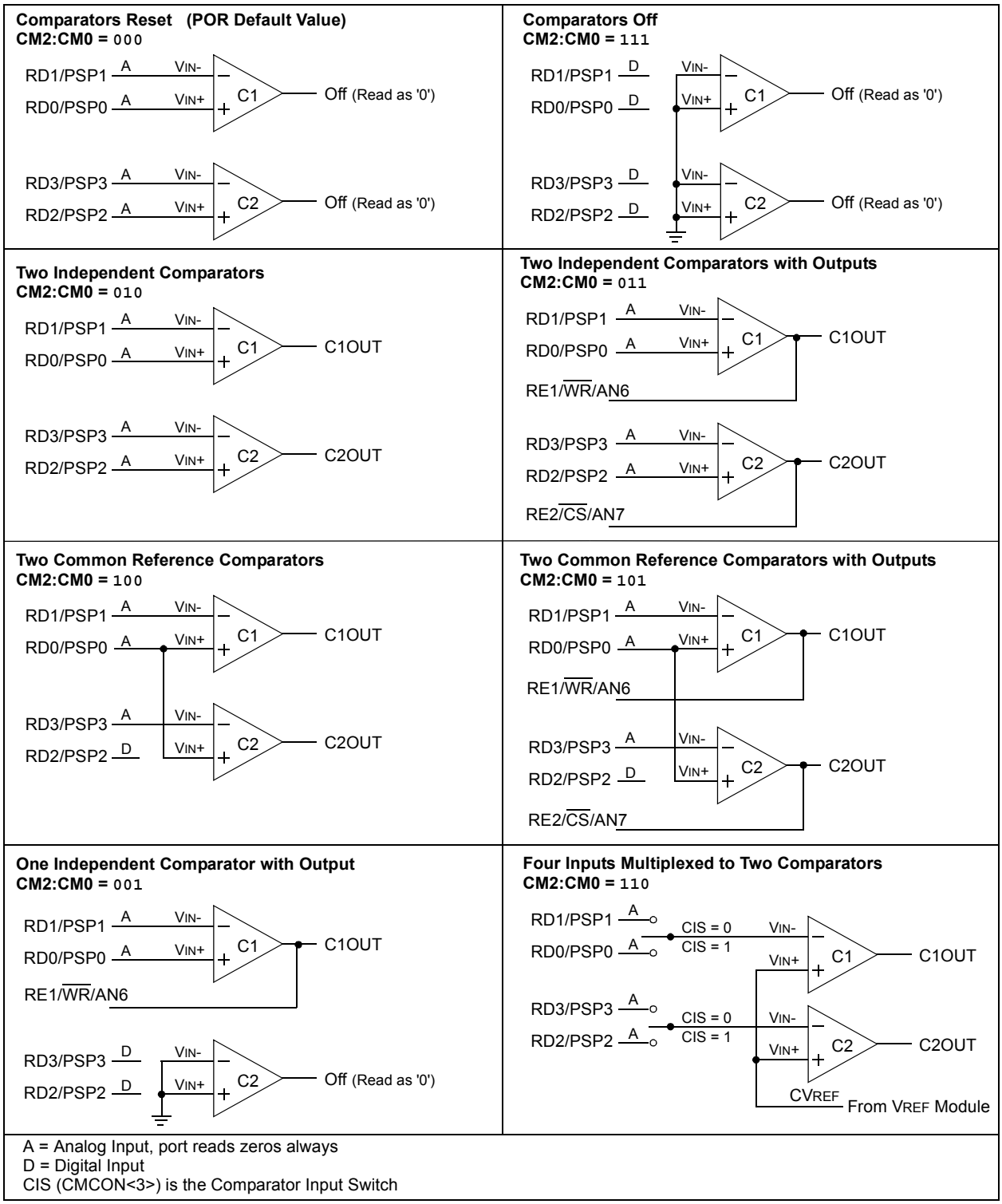

A = Analog Input, port reads zeros always
D = Digital Input
CIS (CMCON<3>) is the Comparator Input Switch

© 2003 Microchip Technology Inc.

21.2 Comparator Operation

A single comparator is shown in Figure 21-2 along with the relationship between the analog input levels and the digital output. When the analog input at VIN+ is less than the analog input VIN-, the output of the comparator is a digital low level. When the analog input at VIN+ is greater than the analog input VIN-, the output of the comparator is a digital high level. The shaded areas of the output of the comparator in Figure 21-2 represent the uncertainty due to input offsets and response time.

21.3 Comparator Reference

An external or internal reference signal may be used depending on the Comparator Operating mode. The analog signal present at VIN- is compared to the signal at VIN+, and the digital output of the comparator is adjusted accordingly (Figure 21-2).

FIGURE 21-2: SINGLE COMPARATOR

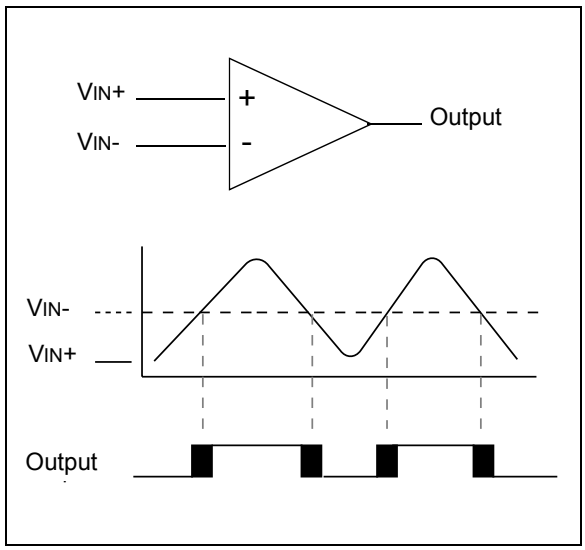

21.3.1 EXTERNAL REFERENCE SIGNAL

When external voltage references are used, the comparator module can be configured to have the comparators operate from the same, or different reference sources. However, threshold detector applications may require the same reference. The reference signal must be between VSS and VDD, and can be applied to either pin of the comparator(s).

21.3.2 INTERNAL REFERENCE SIGNAL

The comparator module also allows the selection of an internally generated voltage reference for the comparators. Section 22.0 contains a detailed description of the Comparator Voltage Reference Module that provides this signal. The internal reference signal is used when comparators are in mode CM<2:0> = 110 (Figure 21-1). In this mode, the internal voltage reference is applied to the VIN+ pin of both comparators.

21.4 Comparator Response Time

Response time is the minimum time, after selecting a new reference voltage or input source, before the comparator output has a valid level. If the internal reference is changed, the maximum delay of the internal voltage reference must be considered when using the comparator outputs. Otherwise the maximum delay of the comparators should be used (Section 27.0).

21.5 Comparator Outputs

The comparator outputs are read through the CMCON register. These bits are read only. The comparator outputs may also be directly output to the RE1 and RE2 I/O pins. When enabled, multiplexors in the output path of the RE1 and RE2 pins will switch and the output of each pin will be the unsynchronized output of the comparator. The uncertainty of each of the comparators is related to the input offset voltage and the response time given in the specifications. Figure 21-3 shows the comparator output block diagram.

The TRISE bits will still function as an output enable/ disable for the RE1 and RE2 pins while in this mode.

The polarity of the comparator outputs can be changed using the C2INV and C1INV bits (CMCON<4:5>).

Note 1:	When reading the PORT register, all pins configured as analog inputs will read as a '0'. Pins configured as digital inputs will convert an analog input, according to the Schmitt Trigger input specification.
2:	Analog levels on any pin defined as a digital input, may cause the input buffer to consume more current than is specified.

FIGURE 21-3: COMPARATOR OUTPUT BLOCK DIAGRAM

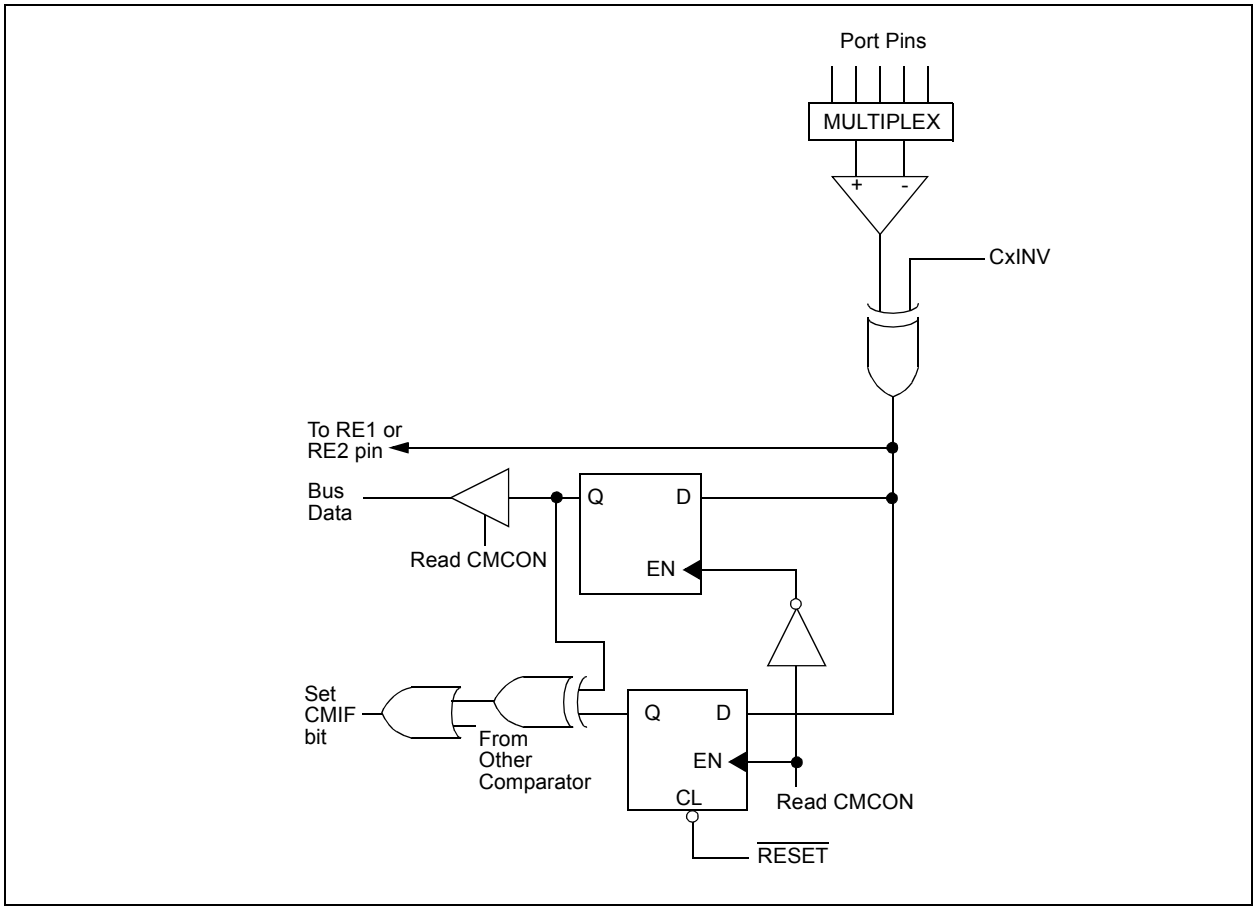

21.6 Comparator Interrupts

The comparator interrupt flag is set whenever there is a change in the output value of either comparator. Software will need to maintain information about the status of the output bits, as read from CMCON<7:6>, to determine the actual change that occurred. The CMIF bit (PIR registers) is the comparator interrupt flag. The CMIF bit must be reset by clearing ‘0’. Since it is also possible to write a '1' to this register, a simulated interrupt may be initiated.

The CMIE bit (PIE registers) and the PEIE bit (INTCON register) must be set to enable the interrupt. In addition, the GIE bit must also be set. If any of these bits are clear, the interrupt is not enabled, though the CMIF bit will still be set if an interrupt condition occurs.

.

Note:	If a change in the CMCON register (C1OUT or C2OUT) should occur when a read operation is being executed (start of the Q2 cycle), then the CMIF (PIR registers) interrupt flag may not get set.

The user, in the Interrupt Service Routine, can clear the interrupt in the following manner:

a) Any read or write of CMCON will end the mismatch condition.

b) Clear flag bit CMIF.

A mismatch condition will continue to set flag bit CMIF. Reading CMCON will end the mismatch condition and allow flag bit CMIF to be cleared.

© 2003 Microchip Technology Inc.

21.7 Comparator Operation During SLEEP

When a comparator is active and the device is placed in SLEEP mode, the comparator remains active and the interrupt is functional, if enabled. This interrupt will wake-up the device from SLEEP mode, when enabled. While the comparator is powered up, higher SLEEP currents than shown in the power-down current specification will occur. Each operational comparator will consume additional current, as shown in the comparator specifications. To minimize power consumption while in SLEEP mode, turn off the comparators, CM<2:0> = 111, before entering SLEEP. If the device wakes up from SLEEP, the contents of the CMCON register are not affected.

21.8 Effects of a RESET

A device RESET forces the CMCON register to its RESET state, causing the comparator module to be in the Comparator RESET mode, CM<2:0> = 000. This ensures that all potential inputs are analog inputs. Device current is minimized when analog inputs are present at RESET time. The comparators will be powered down during the RESET interval.

21.9 Analog Input Connection Considerations

A simplified circuit for an analog input is shown in Figure 21-4. Since the analog pins are connected to a digital output, they have reverse biased diodes to VDD and VSS. The analog input, therefore, must be between VSS and VDD. If the input voltage deviates from this range by more than 0.6V in either direction, one of the diodes is forward biased and a latchup condition may occur. A maximum source impedance of 10 kΩ is recommended for the analog sources. Any external component connected to an analog input pin, such as a capacitor or a Zener diode, should have very little leakage current.

FIGURE 21-4: ANALOG INPUT MODEL

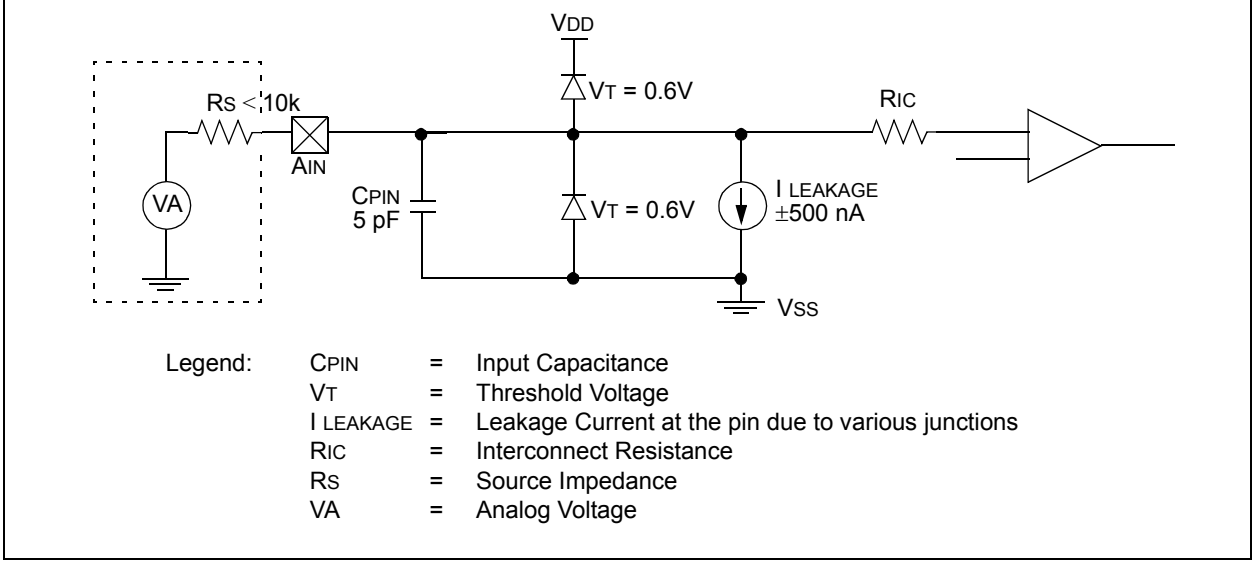

Legend:

CPIN	=	Input Capacitance
VT	=	Threshold Voltage
I LEAKAGE	=	Leakage Current at the pin due to various junctions
RIC	=	Interconnect Resistance
RS	=	Source Impedance
VA	=	Analog Voltage

TABLE 21-1: REGISTERS ASSOCIATED WITH COMPARATOR MODULE

Name	Bit 7	Bit 6	Bit 5	Bit 4	Bit 3	Bit 2	Bit 1	Bit 0	Value on POR	Value on all other RESETS
CMCON	C2OUT	C1OUT	C2INV	C1INV	CIS	CM2	CM1	CM0	0000 0000	0000 0000
CVRCON	CVREN	CVROE	CVRR	CVRSS	CVR3	CVR2	CVR1	CVR0	0000 0000	0000 0000
INTCON	GIE/ GIEH	PEIE/ GIEL	TMR0IE	INT0IE	RBIE	TMR0IF	INT0IF	RBIF	0000 000x	0000 000u
PIR2	—	CMIF(1)	—	EEIF	BCLIF	LVDIF	TMR3IF	ECCP1IF(1)	-0-0 0000	-0-0 0000
PIE2	—	CMIE(1)	—	EEIE	BCLIE	LVDIE	TMR3IE	ECCP1IE(1)	-0-0 0000	-0-0 0000
IPR2	—	CMIP(1)	—	EEIP	BCLIP	LVDIP	TMR3IP	ECCP1IP(1)	-1-1 1111	-1-1 1111
PORTD	RD7	RD6	RD5	RD4	RD3	RD2	RD1	RD0	x000 0000	u000 0000
LATD	LATD7	LATD6	LATD5	LATD4	LATD3	LATD2	LATD1	LATD0	xxxx xxxx	uuuu uuuu
TRISD	PORTD Data Direction Register								1111 1111	1111 1111
PORTE	—	—	—	—	—	RE2	RE1	RE0	---- -000	---- -000
LATE	—	—	—	—	—	LATE2	LATE1	LATE0	---- -xxx	---- -uuu
TRISE	IBF(1)	OBF(1)	IBOV(1)	PSPMODE(1)	—	TRISE2	TRISE1	TRISE0	0000 -111	0000 -111

Legend: x = unknown, u = unchanged, - = unimplemented, read as '0'

Note 1: These bits are reserved on PIC18F2X8 devices; always maintain these bits clear.

© 2003 Microchip Technology Inc.

22.0 COMPARATOR VOLTAGE REFERENCE MODULE

Note:	The Comparator Voltage Reference is only available on the PIC18F448 and PIC18F458.

This module is a 16-tap resistor ladder network that provides a selectable voltage reference. The resistor ladder is segmented to provide two ranges of CVREF values and has a power-down function to conserve power when the reference is not being used. The CVRCON register controls the operation of the reference, as shown in Register 22-1. The block diagram is shown in Figure 22-1.

The comparator and reference supply voltage can come from either VDD and VSS, or the external VREF+ and VREF-, that are multiplexed with RA3 and RA2. The comparator reference supply voltage is controlled by the CVRSS bit.

22.1 Configuring the Comparator Voltage Reference

The Comparator Voltage Reference can output 16 distinct voltage levels for each range. The equations used to calculate the output of the Comparator Voltage Reference are as follows.

EQUATION 22-1:

If CVRR = 1:

$CV_{REF} = (CVR<3:0>/24) \times CV_{RSRC}$

where:

$CVRSS = 1, CV_{RSRC} = (V_{REF+}) - (V_{REF-})$

$CVRSS = 0, CV_{RSRC} = V_{DD} - V_{SS}$

EQUATION 22-2:

If CVRR = 0:

$CV_{REF} = (CV_{RSRC} \times 1/4) + (CVR<3:0>/32) \times CV_{RSRC}$

where:

$CVRSS = 1, CV_{RSRC} = (V_{REF+}) - (V_{REF-})$

$CVRSS = 0, CV_{RSRC} = V_{DD} - V_{SS}$

The settling time of the Comparator Voltage Reference must be considered when changing the RA0/AN0/CVREF output (see Table 27-4 in Section 27.2).

REGISTER 22-1: CVRCON REGISTER

R/W-0	R/W-0	R/W-0	R/W-0	R/W-0	R/W-0	R/W-0	R/W-0
CVREN	CVROE	CVRR	CVRSS	CVR3	CVR2	CVR1	CVR0
bit 7							bit 0

bit 7 **CVREN**: Comparator Voltage Reference Enable bit
1 = CVREF circuit powered on
0 = CVREF circuit powered down

bit 6 **CVROE**: Comparator VREF Output Enable bit
1 = CVREF voltage level is also output on the RA0/AN0/CVREF pin
0 = CVREF voltage is disconnected from the RA0/AN0/CVREF pin

bit 5 **CVRR**: Comparator VREF Range Selection bit
1 = 0.00 CVRSRC to 0.625 CVRSRC, with CVRSRC/24 step size
0 = 0.25 CVRSRC to 0.719 CVRSRC, with CVRSRC/32 step size

bit 4 **CVRSS**: Comparator VREF Source Selection bit
1 = Comparator reference source CVRSRC = VDD – VSS
0 = Comparator reference source CVRSRC = (VREF+) – (VREF-)

bit 3-0 **CVR<3:0>:** Comparator VREF Value Selection 0 ≤ CVR3:CVR0 ≤ 15 bits
When CVRR = 1:
CVREF = (CVR3:CVR0/24) • (CVRSRC)
When CVRR = 0:
CVREF = 1/4 • (CVRSRC) + (CVR3:CVR0/32) • (CVRSRC)

Legend:			
R = Readable bit	W = Writable bit	U = Unimplemented bit, read as '0'	
- n = Value at POR	'1' = Bit is set	'0' = Bit is cleared	x = Bit is unknown

FIGURE 22-1: VOLTAGE REFERENCE BLOCK DIAGRAM

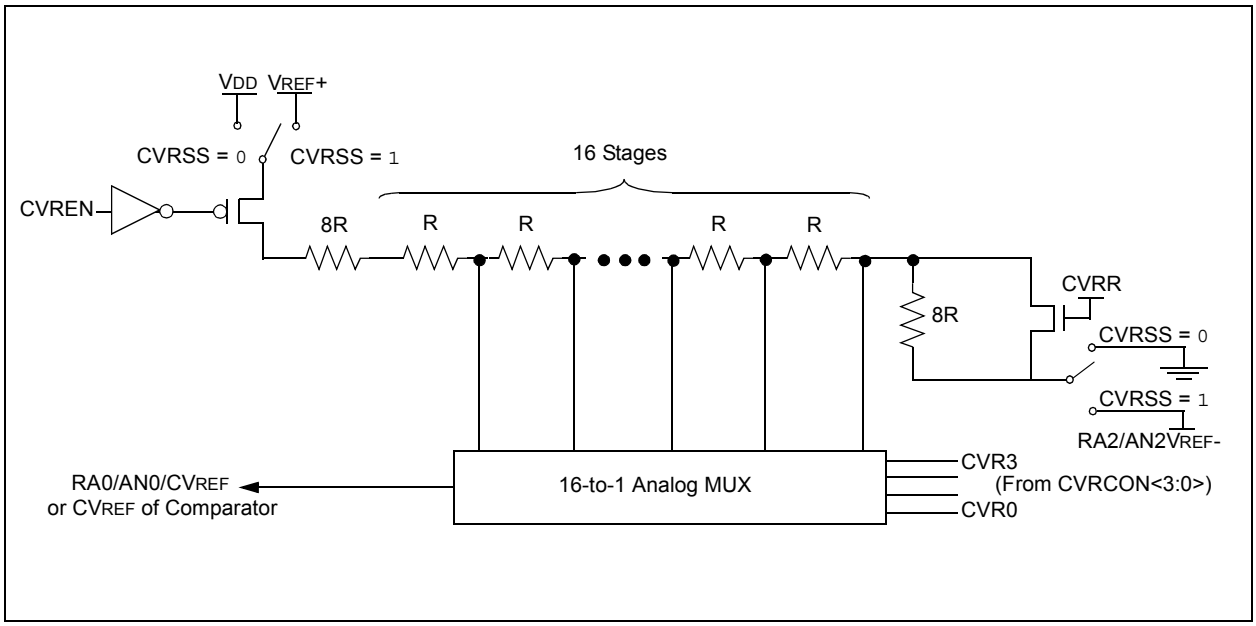

22.2 Voltage Reference Accuracy/Error

The full range of voltage reference cannot be realized due to the construction of the module. The transistors on the top and bottom of the resistor ladder network (Figure 22-1) keep VREF from approaching the reference source rails. The voltage reference is derived from the reference source; therefore, the VREF output changes with fluctuations in that source. The absolute accuracy of the voltage reference can be found in Section 27.0.

22.3 Operation During SLEEP

When the device wakes up from SLEEP through an interrupt or a Watchdog Timer Time-out, the contents of the CVRCON register are not affected. To minimize current consumption in SLEEP mode, the voltage reference should be disabled.

22.4 Effects of a RESET

A device RESET disables the voltage reference by clearing bit CVREN (CVRCON register). This RESET also disconnects the reference from the RA2 pin by clearing bit CVROE (CVRCON register) and selects the high voltage range by clearing bit CVRR (CVRCON register). The CVRSS value select bits, CVRCON<3:0>, are also cleared.

22.5 Connection Considerations

The voltage reference module operates independently of the comparator module. The output of the reference generator may be connected to the RA0/AN0 pin if the TRISA<0> bit is set and the CVROE bit (CVRCON<6>) is set. Enabling the voltage reference output onto the RA0/AN0 pin, with an input signal present, will increase current consumption. Connecting RA0/AN0 as a digital output with CVRSS enabled, will also increase current consumption.

The RA0/AN0 pin can be used as a simple D/A output with limited drive capability. Due to the limited current drive capability, a buffer must be used on the voltage reference output for external connections to VREF. Figure 22-2 shows an example buffering technique.

© 2003 Microchip Technology Inc.

FIGURE 22-2: VOLTAGE REFERENCE OUTPUT BUFFER EXAMPLE

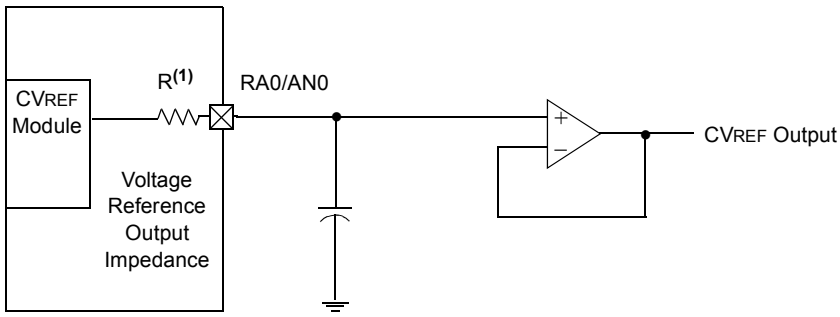

Note 1: R is dependent upon the voltage reference configuration CVRCON<3:0> and CVRCON<5>.

TABLE 22-1: REGISTERS ASSOCIATED WITH COMPARATOR VOLTAGE REFERENCE

Name	Bit 7	Bit 6	Bit 5	Bit 4	Bit 3	Bit 2	Bit 1	Bit 0	Value on POR	Value on all other RESETS
CVRCON	CVREN	CVROE	CVRR	CVRSS	CVR3	CVR2	CVR1	CVR0	0000 0000	0000 0000
CMCON	C2OUT	C1OUT	C2INV	C1INV	CIS	CM2	CM1	CM0	0000 0000	0000 0000
TRISA	—	TRISA6	TRISA5	TRISA4	TRISA3	TRISA2	TRISA1	TRISA0	-111 1111	-111 1111

Legend: x = unknown, u = unchanged, - = unimplemented, read as '0'.
Shaded cells are not used with the comparator voltage reference.

NOTES:

© 2003 Microchip Technology Inc.

23.0 LOW VOLTAGE DETECT

In many applications, the ability to determine if the device voltage (V_{DD}) is below a specified voltage level is a desirable feature. A window of operation for the application can be created, where the application software can do “housekeeping tasks” before the device voltage exits the valid operating range. This can be done using the Low Voltage Detect module.

This module is a software programmable circuitry, where a device voltage trip point can be specified. When the voltage of the device becomes lower than the specified point, an interrupt flag is set. If the interrupt is enabled, the program execution will branch to the interrupt vector address and the software can then respond to that interrupt source.

The Low Voltage Detect circuitry is completely under software control. This allows the circuitry to be “turned off” by the software, which minimizes the current consumption for the device.

Figure 23-1 shows a possible application voltage curve (typically for batteries). Over time, the device voltage decreases. When the device voltage equals voltage V_A, the LVD logic generates an interrupt. This occurs at time T_A. The application software then has the time, until the device voltage is no longer in valid operating range, to shutdown the system. Voltage point V_B is the minimum valid operating voltage specification. This occurs at time T_B. The difference $T_B - T_A$ is the total time for shutdown.

The block diagram for the LVD module is shown in Figure 23-2. A comparator uses an internally generated reference voltage as the set point. When the selected tap output of the device voltage crosses the set point (is lower than), the LVDIF bit is set.

Each node in the resistor divider represents a “trip point” voltage. The “trip point” voltage is the minimum supply voltage level at which the device can operate before the LVD module asserts an interrupt. When the supply voltage is equal to the trip point, the voltage tapped off of the resistor array is equal to the internal reference voltage generated by the voltage reference module. The comparator then generates an interrupt signal setting the LVDIF bit. This voltage is software programmable to any one of 16 values (see Figure 23-2). The trip point is selected by programming the LVDL3:LVDL0 bits (LVDCON<3:0>).

FIGURE 23-1: TYPICAL LOW VOLTAGE DETECT APPLICATION

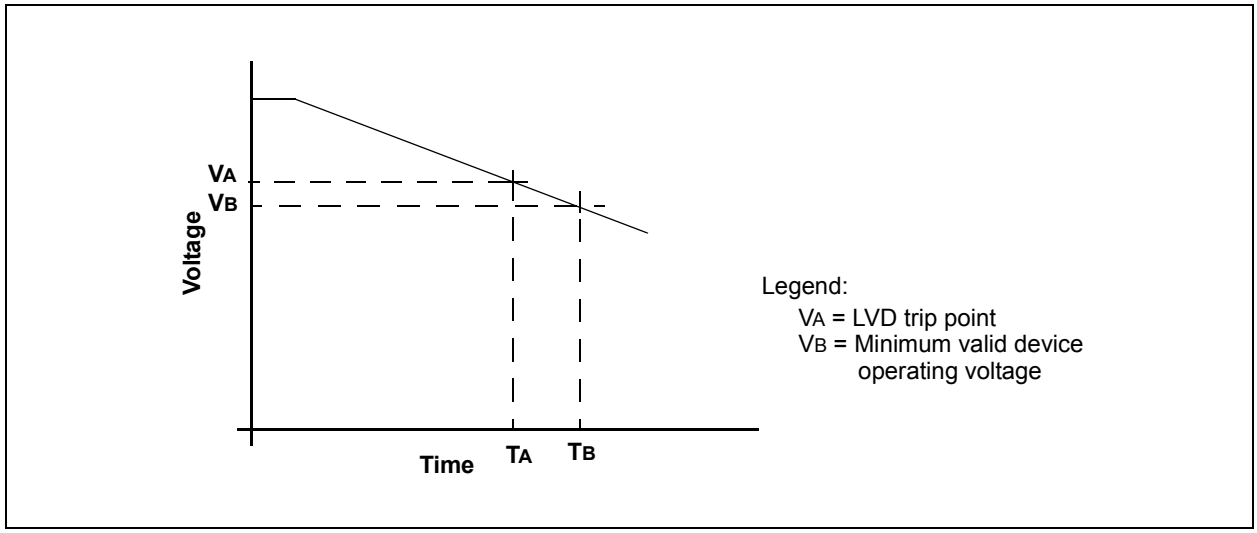

FIGURE 23-2: LOW VOLTAGE DETECT (LVD) BLOCK DIAGRAM

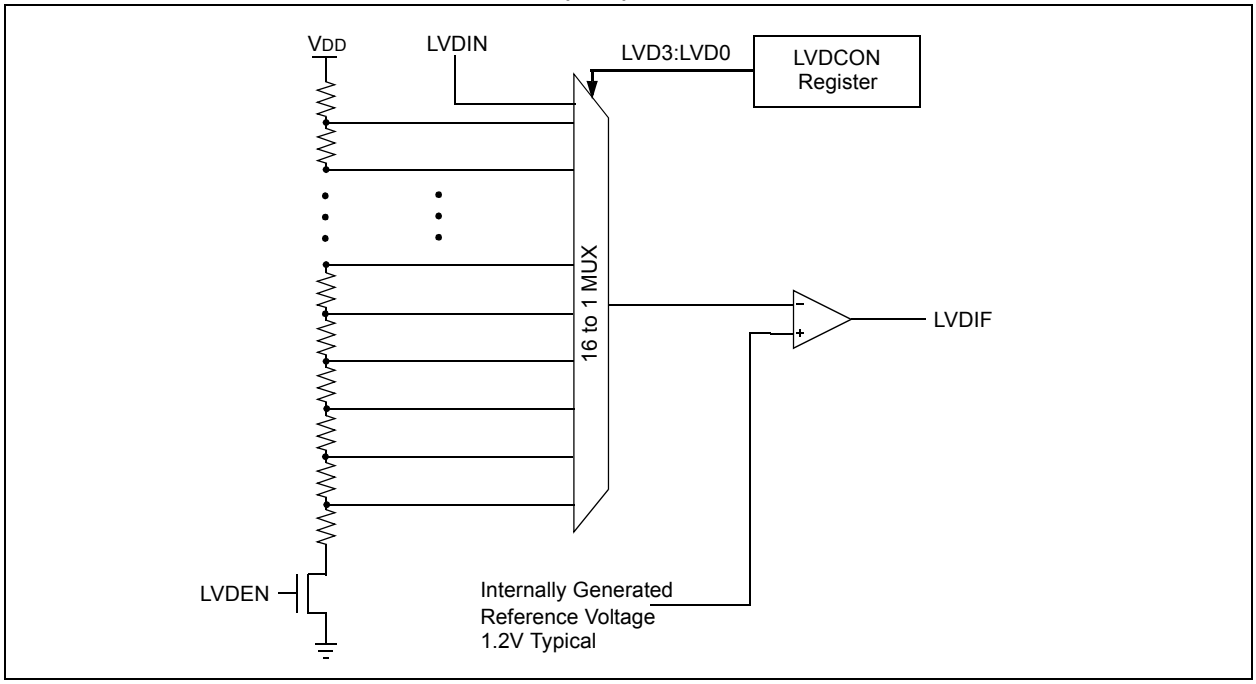

The LVD module has an additional feature that allows the user to supply the trip voltage to the module from an external source. This mode is enabled when bits LVDL3:LVDL0 are set to '1111'. In this state, the comparator input is multiplexed from the external input pin LVDIN to one input of the comparator (Figure 23-3).

The other input is connected to the internally generated voltage reference (parameter D423 in Section 27.2). This gives users flexibility, because it allows them to configure the Low Voltage Detect interrupt to occur at any voltage in the valid operating range.

FIGURE 23-3: LOW VOLTAGE DETECT (LVD) WITH EXTERNAL INPUT BLOCK DIAGRAM

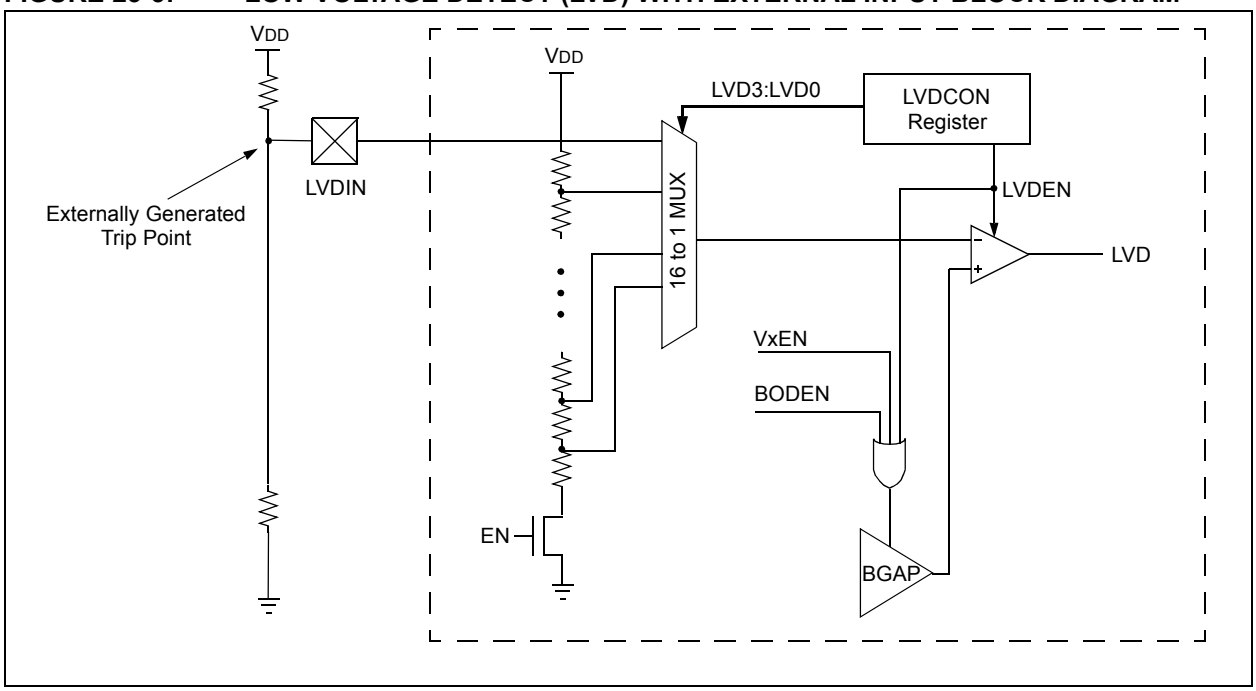

© 2003 Microchip Technology Inc.

23.1 Control Register

The Low Voltage Detect Control register controls the operation of the Low Voltage Detect circuitry.

REGISTER 23-1: LVDCON REGISTER

U-0	U-0	R-0	R/W-0	R/W-0	R/W-1	R/W-0	R/W-1
—	—	IRVST	LVDEN	LVDL3	LVDL2	LVDL1	LVDL0
bit 7							bit 0

bit 7-6 **Unimplemented:** Read as '0'

bit 5 **IRVST:** Internal Reference Voltage Stable Flag bit
1 = Indicates that the Low Voltage Detect logic will generate the interrupt flag at the specified voltage range
0 = Indicates that the Low Voltage Detect logic will not generate the interrupt flag at the specified voltage range and the LVD interrupt should not be enabled

bit 4 **LVDEN:** Low Voltage Detect Power Enable bit
1 = Enables LVD, powers up LVD circuit
0 = Disables LVD, powers down LVD circuit

bit 3-0 **LVDL3:LVDL0:** Low Voltage Detection Limit bits
1111 = External analog input is used (input comes from the LVDIN pin)
1110 = 4.45V min. - 4.83V max.
1101 = 4.16V min. - 4.5V max.
1100 = 3.96V min. - 4.2V max.
1011 = 3.76V min. - 4.08V max.
1010 = 3.57V min. - 3.87V max.
1001 = 3.47V min. - 3.75V max.
1000 = 3.27V min. - 3.55V max.
0111 = 2.98V min. - 3.22V max.
0110 = 2.77V min. - 3.01V max.
0101 = 2.67V min. - 2.89V max.
0100 = 2.48V min. - 2.68V max.
0011 = 2.37V min. - 2.57V max.
0010 = 2.18V min. - 2.36V max.
0001 = 1.98V min. - 2.14V max.
0000 = Reserved

Note: LVDL3:LVDL0 modes, which result in a trip point below the valid operating voltage of the device, are not tested.

Legend:			
R = Readable bit	W = Writable bit	U = Unimplemented bit, read as '0'	
- n = Value at POR	'1' = Bit is set	'0' = Bit is cleared	x = Bit is unknown

23.2 Operation

Depending on the power source for the device voltage, the voltage normally decreases relatively slowly. This means that the LVD module does not need to be constantly operating. To decrease the current requirements, the LVD circuitry only needs to be enabled for short periods, where the voltage is checked. After doing the check, the LVD module may be disabled.

Each time that the LVD module is enabled, the circuitry requires some time to stabilize. After the circuitry has stabilized, all status flags may be cleared. The module will then indicate the proper state of the system.

The following steps are needed to set up the LVD module:

1. Write the value to the LVDL3:LVDL0 bits (LVDCON register), which selects the desired LVD trip point.
2. Ensure that LVD interrupts are disabled (the LVDIE bit is cleared or the GIE bit is cleared).
3. Enable the LVD module (set the LVDEN bit in the LVDCON register).
4. Wait for the LVD module to stabilize (the IRVST bit to become set).
5. Clear the LVD interrupt flag, which may have falsely become set until the LVD module has stabilized (clear the LVDIF bit).
6. Enable the LVD interrupt (set the LVDIE and the GIE bits).

Figure 23-4 shows typical waveforms that the LVD module may be used to detect.

FIGURE 23-4: LOW VOLTAGE DETECT WAVEFORMS

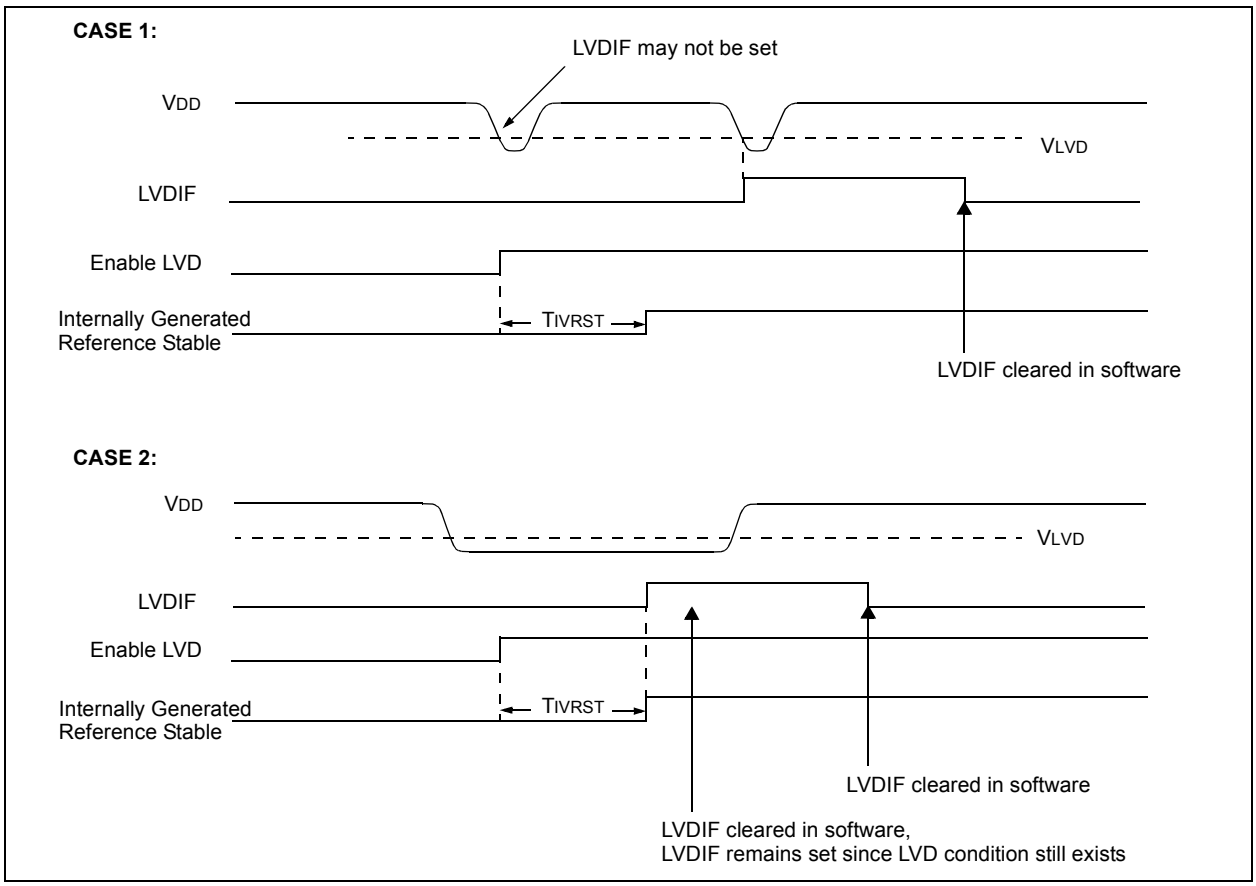

© 2003 Microchip Technology Inc.

23.2.1 REFERENCE VOLTAGE SET POINT

The Internal Reference Voltage of the LVD module may be used by other internal circuitry (the Programmable Brown-out Reset). If these circuits are disabled (lower current consumption), the reference voltage circuit requires a time to become stable before a low voltage condition can be reliably detected. This time is invariant of system clock speed. This start-up time is specified in electrical specification parameter 36. The low voltage interrupt flag will not be enabled until a stable reference voltage is reached. Refer to the waveform in Figure 23-4.

23.2.2 CURRENT CONSUMPTION

When the module is enabled, the LVD comparator and voltage divider are enabled and will consume static current. The voltage divider can be tapped from multiple places in the resistor array. Total current consumption, when enabled, is specified in electrical specification parameter D022B.

23.3 Operation During SLEEP

When enabled, the LVD circuitry continues to operate during SLEEP. If the device voltage crosses the trip point, the LVDIF bit will be set and the device will wake-up from SLEEP. Device execution will continue from the interrupt vector address if interrupts have been globally enabled.

23.4 Effects of a RESET

A device RESET forces all registers to their RESET state. This forces the LVD module to be turned off.

NOTES:

© 2003 Microchip Technology Inc.

24.0 SPECIAL FEATURES OF THE CPU

There are several features intended to maximize system reliability, minimize cost through elimination of external components, provide Power Saving Operating modes and offer code protection. These are:

- Osc Selection
- RESET
  - Power-on Reset (POR)
  - Power-up Timer (PWRT)
  - Oscillator Start-up Timer (OST)
  - Brown-out Reset (BOR)
- Interrupts
- Watchdog Timer (WDT)
- SLEEP
- Code Protection
- ID Locations
- In-Circuit Serial Programming

All PIC18FXX8 devices have a Watchdog Timer, which is permanently enabled via the configuration bits or software controlled. It runs off its own RC oscillator for added reliability. There are two timers that offer necessary delays on power-up. One is the Oscillator Start-up Timer (OST), intended to keep the chip in RESET until the crystal oscillator is stable. The other is the Power-up Timer (PWRT), which provides a fixed delay on power-up only, designed to keep the part in RESET while the power supply stabilizes. With these two timers on-chip, most applications need no external RESET circuitry.

SLEEP mode is designed to offer a very low current power-down mode. The user can wake-up from SLEEP through external RESET, Watchdog Timer Wake-up or through an interrupt. Several oscillator options are also made available to allow the part to fit the application. The RC oscillator option saves system cost, while the LP crystal option saves power. A set of configuration bits is used to select various options.

24.1 Configuration Bits

The configuration bits can be programmed (read as '0'), or left unprogrammed (read as '1'), to select various device configurations. These bits are mapped starting at program memory location 300000h.

The user will note that address 300000h is beyond the user program memory space. In fact, it belongs to the configuration memory space (300000h - 3FFFFFh), which can only be accessed using Table Reads and Table Writes.

Programming the configuration registers is done in a manner similar to programming the FLASH memory. The EECON1 register $\overline{WR}$ bit starts a self-timed write to the configuration register. In normal operation mode, a `TBLWT` instruction with the TBLPTR pointed to the configuration register sets up the address and the data for the configuration register write. Setting the $\overline{WR}$ bit starts a long write to the configuration register. The configuration registers are written a byte at a time. To write or erase a configuration cell, a `TBLWT` instruction can write a ‘1’ or a ‘0’ into the cell.

TABLE 24-1: CONFIGURATION BITS AND DEVICE IDS

File Name		Bit 7	Bit 6	Bit 5	Bit 4	Bit 3	Bit 2	Bit 1	Bit 0	Default/ Unprogrammed Value
300001h	CONFIG1H	—	—	$\overline{\text{OSCSEN}}$	—	—	FOSC2	FOSC1	FOSC0	--1- -111
300002h	CONFIG2L	—	—	—	—	BORV1	BORV0	BOREN	$\overline{\text{PWRTEN}}$	---- 1111
300003h	CONFIG2H	—	—	—	—	WDTPS2	WDTPS1	WDTPS0	WDTEN	---- 1111
300006h	CONFIG4L	$\overline{\text{DEBUG}}$	—	—	—	—	LVP	—	STVREN	1--- -1-1
300008h	CONFIG5L	—	—	—	—	CP3	CP2	CP1	CP0	---- 1111
300009h	CONFIG5H	CPD	CPB	—	—	—	—	—	—	11-- ----
30000Ah	CONFIG6L	—	—	—	—	WRT3	WRT2	WRT1	WRT0	---- 1111
30000Bh	CONFIG6H	WRTD	WRTB	WRTC	—	—	—	—	—	111- ----
30000Ch	CONFIG7L	—	—	—	—	EBTR3	EBTR2	EBTR1	EBTR0	---- 1111
30000Dh	CONFIG7H	—	EBTRB	—	—	—	—	—	—	-1-- ----
3FFFFEh	DEVID1	DEV2	DEV1	DEV0	REV4	REV3	REV2	REV1	REV0	**(1)**
3FFFFFh	DEVID2	DEV10	DEV9	DEV8	DEV7	DEV6	DEV5	DEV4	DEV3	0000 1000

Legend: x = unknown, u = unchanged, - = unimplemented, q = value depends on condition.
Shaded cells are unimplemented, read as ‘0’.

Note 1: See Register 24-11 for DEVID1 values.

REGISTER 24-1: CONFIG1H: CONFIGURATION REGISTER 1 HIGH (BYTE ADDRESS 300001h)

U-0	U-0	R/P-1	U-0	U-0	R/P-1	R/P-1	R/P-1
—	—	$\overline{\text{OSCSEN}}$	—	—	FOSC2	FOSC1	FOSC0
bit 7							bit 0

bit 7-6 **Unimplemented:** Read as '0'

bit 5 **$\overline{\text{OSCSEN}}$**: Oscillator System Clock Switch Enable bit
1 = Oscillator system clock switch option is disabled (main oscillator is source)
0 = Oscillator system clock switch option is enabled (oscillator switching is enabled)

bit 4-3 **Unimplemented:** Read as '0'

bit 2-0 **FOSC2:FOSC0**: Oscillator Selection bits
111 = RC oscillator w/ OSC2 configured as RA6
110 = HS oscillator with PLL enabled/clock frequency = (4 x FOSC)
101 = EC oscillator w/ OSC2 configured as RA6
100 = EC oscillator w/ OSC2 configured as divide-by-4 clock output
011 = RC oscillator
010 = HS oscillator
001 = XT oscillator
000 = LP oscillator

Legend:		
R = Readable bit	P = Programmable bit	U = Unimplemented bit, read as '0'
- n = Value when device is unprogrammed		u = Unchanged from programmed state

REGISTER 24-2: CONFIG2L: CONFIGURATION REGISTER 2 LOW (BYTE ADDRESS 300002h)

U-0	U-0	U-0	U-0	R/P-1	R/P-1	R/P-1	R/P-1
—	—	—	—	BORV1	BORV0	BOREN	$\overline{\text{PWRTEN}}$
bit 7							bit 0

bit 7-4 **Unimplemented:** Read as '0'

bit 3-2 **BORV1:BORV0:** Brown-out Reset Voltage bits
11 = VBOR set to 2.0V
10 = VBOR set to 2.7V
01 = VBOR set to 4.2V
00 = VBOR set to 4.5V

bit 1 **BOREN:** Brown-out Reset Enable bit
1 = Brown-out Reset enabled
0 = Brown-out Reset disabled

bit 0 **$\overline{\text{PWRTEN}}$:** Power-up Timer Enable bit
1 = PWRT disabled
0 = PWRT enabled

Legend:		
R = Readable bit	P = Programmable bit	U = Unimplemented bit, read as '0'
- n = Value when device is unprogrammed		u = Unchanged from programmed state

© 2003 Microchip Technology Inc.

REGISTER 24-3: CONFIG2H: CONFIGURATION REGISTER 2 HIGH (BYTE ADDRESS 300003h)

U-0	U-0	U-0	U-0	R/P-1	R/P-1	R/P-1	R/P-1
—	—	—	—	WDTPS2	WDTPS1	WDTPS0	WDTEN
bit 7							bit 0

bit 7-4 **Unimplemented:** Read as '0'

bit 3-1 **WDTPS2:WDTPS0:** Watchdog Timer Postscale Select bits

111 = 1:128
110 = 1:64
101 = 1:32
100 = 1:16
011 = 1:8
010 = 1:4
001 = 1:2
000 = 1:1

Note: The Watchdog Timer postscale select bits configuration used in the PIC18FXXX devices has changed from the configuration used in the PIC18CXXX devices.

bit 0 **WDTEN:** Watchdog Timer Enable bit

1 = WDT enabled
0 = WDT disabled (control is placed on the SWDTEN bit)

Legend:		
R = Readable bit	P = Programmable bit	U = Unimplemented bit, read as '0'
- n = Value when device is unprogrammed		u = Unchanged from programmed state

REGISTER 24-4: CONFIG4L: CONFIGURATION REGISTER 4 LOW (BYTE ADDRESS 300006h)

R/P-1	U-0	U-0	U-0	U-0	R/P-1	U-0	R/P-1
$\overline{\text{DEBUG}}$	—	—	—	—	LVP	—	STVREN
bit 7							bit 0

bit 7 **$\overline{\text{DEBUG}}$:** Background Debugger Enable bit

1 = Background Debugger disabled. RB6 and RB7 configured as general purpose I/O pins.
0 = Background Debugger enabled. RB6 and RB7 are dedicated to In-Circuit Debug.

bit 6-3 **Unimplemented:** Read as '0'

bit 2 **LVP:** Low Voltage ICSP Enable bit

1 = Low Voltage ICSP enabled
0 = Low Voltage ICSP disabled

bit 1 **Unimplemented:** Read as '0'

bit 0 **STVREN:** Stack Full/Underflow Reset Enable bit

1 = Stack Full/Underflow will cause RESET
0 = Stack Full/Underflow will not cause RESET

Legend:		
R = Readable bit	C = Clearable bit	U = Unimplemented bit, read as '0'
- n = Value when device is unprogrammed		u = Unchanged from programmed state

REGISTER 24-5: CONFIG5L: CONFIGURATION REGISTER 5 LOW (BYTE ADDRESS 300008h)

U-0	U-0	U-0	U-0	R/C-1	R/C-1	R/C-1	R/C-1
—	—	—	—	CP3(1)	CP2(1)	CP1	CP0
bit 7							bit 0

bit 7-4 **Unimplemented:** Read as '0'

bit 3 **CP3:** Code Protection bit(1)
1 = Block 3 (006000-007FFFh) not code protected
0 = Block 3 (006000-007FFFh) code protected

bit 2 **CP2:** Code Protection bit(1)
1 = Block 2 (004000-005FFFh) not code protected
0 = Block 2 (004000-005FFFh) code protected

bit 1 **CP1:** Code Protection bit
1 = Block 1 (002000-003FFFh) not code protected
0 = Block 1 (002000-003FFFh) code protected

bit 0 **CP0:** Code Protection bit
1 = Block 0 (000200-001FFFh) not code protected
0 = Block 0 (000200-001FFFh) code protected

Note 1: Unimplemented in PIC18FX48 devices; maintain this bit set.

Legend:		
R = Readable bit	C = Clearable bit	U = Unimplemented bit, read as '0'
- n = Value when device is unprogrammed		u = Unchanged from programmed state

REGISTER 24-6: CONFIG5H: CONFIGURATION REGISTER 5 HIGH (BYTE ADDRESS 300009h)

R/C-1	R/C-1	U-0	U-0	U-0	U-0	U-0	U-0
CPD	CPB	—	—	—	—	—	—
bit 7							bit 0

bit 7 **CPD:** Data EEPROM Code Protection bit
1 = Data EEPROM not code protected
0 = Data EEPROM code protected

bit 6 **CPB:** Boot Block Code Protection bit
1 = Boot Block (000000-0001FFh) not code protected
0 = Boot Block (000000-0001FFh) code protected

bit 5-0 **Unimplemented:** Read as '0'

Legend:		
R = Readable bit	C = Clearable bit	U = Unimplemented bit, read as '0'
- n = Value when device is unprogrammed		u = Unchanged from programmed state

© 2003 Microchip Technology Inc.

REGISTER 24-7: CONFIG6L: CONFIGURATION REGISTER 6 LOW (BYTE ADDRESS 30000Ah)

U-0	U-0	U-0	U-0	R/P-1	R/P-1	R/P-1	R/P-1
—	—	—	—	WRT3(1)	WRT2(1)	WRT1	WRT0
bit 7							bit 0

bit 7-4 **Unimplemented:** Read as '0'

bit 3 **WRT3:** Write Protection bit(1)
1 = Block 3 (006000-007FFFh) not write protected
0 = Block 3 (006000-007FFFh) write protected

bit 2 **WRT2:** Write Protection bit(1)
1 = Block 2 (004000-005FFFh) not write protected
0 = Block 2 (004000-005FFFh) write protected

bit 1 **WRT1:** Write Protection bit
1 = Block 1 (002000-003FFFh) not write protected
0 = Block 1 (002000-003FFFh) write protected

bit 0 **WRT0:** Write Protection bit
1 = Block 0 (000200-001FFFh) not write protected
0 = Block 0 (000200-001FFFh) write protected

Note 1: Unimplemented in PIC18FX48 devices; maintain this bit set.

Legend:		
R = Readable bit	P = Programmable bit	U = Unimplemented bit, read as '0'
- n = Value when device is unprogrammed		u = Unchanged from programmed state

REGISTER 24-8: CONFIG6H: CONFIGURATION REGISTER 6 HIGH (BYTE ADDRESS 30000Bh)

R/P-1	R/P-1	R-1	U-0	U-0	U-0	U-0	U-0
WRTD	WRTB	WRTC	—	—	—	—	—
bit 7							bit 0

bit 7 **WRTD:** Data EEPROM Write Protection bit
1 = Data EEPROM not write protected
0 = Data EEPROM write protected

bit 6 **WRTB:** Boot Block Write Protection bit
1 = Boot Block (000000-0001FFh) not write protected
0 = Boot Block (000000-0001FFh) write protected

bit 5 **WRTC:** Configuration Register Write Protection bit
1 = Configuration registers (300000-3000FFh) not write protected
0 = Configuration registers (300000-3000FFh) write protected

Note: This bit is read only, and cannot be changed in User mode.

bit 4-0 **Unimplemented:** Read as '0'

Legend:		
R = Readable bit	P = Programmable bit	U = Unimplemented bit, read as '0'
- n = Value when device is unprogrammed		u = Unchanged from programmed state

REGISTER 24-9: CONFIG7L: CONFIGURATION REGISTER 7 LOW (BYTE ADDRESS 30000Ch)

U-0	U-0	U-0	U-0	R/P-1	R/P-1	R/P-1	R/P-1
—	—	—	—	EBTR3(1)	EBTR2(1)	EBTR1	EBTR0
bit 7							bit 0

bit 7-4 **Unimplemented:** Read as '0'

bit 3 **EBTR3:** Table Read Protection bit(1)
1 = Block 3 (006000-007FFFh) not protected from Table Reads executed in other blocks
0 = Block 3 (006000-007FFFh) protected from Table Reads executed in other blocks

bit 2 **EBTR2:** Table Read Protection bit(1)
1 = Block 2 (004000-005FFFh) not protected from Table Reads executed in other blocks
0 = Block 2 (004000-005FFFh) protected from Table Reads executed in other blocks

bit 1 **EBTR1:** Table Read Protection bit
1 = Block 1 (002000-003FFFh) not protected from Table Reads executed in other blocks
0 = Block 1 (002000-003FFFh) protected from Table Reads executed in other blocks

bit 0 **EBTR0:** Table Read Protection bit
1 = Block 0 (000200-001FFFh) not protected from Table Reads executed in other blocks
0 = Block 0 (000200-001FFFh) protected from Table Reads executed in other blocks

Note 1: Unimplemented in PIC18FX48 devices; maintain this bit set.

Legend:		
R = Readable bit	P = Programmable bit	U = Unimplemented bit, read as '0'
- n = Value when device is unprogrammed		u = Unchanged from programmed state

REGISTER 24-10: CONFIG7H: CONFIGURATION REGISTER 7 HIGH (BYTE ADDRESS 30000Dh)

U-0	R/P-1	U-0	U-0	U-0	U-0	U-0	U-0
—	EBTRB	—	—	—	—	—	—
bit 7							bit 0

bit 7 **Unimplemented:** Read as '0'

bit 6 **EBTRB:** Boot Block Table Read Protection bit
1 = Boot Block (000000-0001FFh) not protected from Table Reads executed in other blocks
0 = Boot Block (000000-0001FFh) protected from Table Reads executed in other blocks

bit 5-0 **Unimplemented:** Read as '0'

Legend:		
R = Readable bit	P = Programmable bit	U = Unimplemented bit, read as '0'
- n = Value when device is unprogrammed		u = Unchanged from programmed state

© 2003 Microchip Technology Inc.

REGISTER 24-11: DEVID1: DEVICE ID REGISTER 1 FOR PIC18FXX8 DEVICE (BYTE ADDRESS 3FFFFEh)

R	R	R	R	R	R	R	R
DEV2	DEV1	DEV0	REV4	REV3	REV2	REV1	REV0
bit 7							bit 0

bit 7-5 **DEV2:DEV0:** Device ID bits

These bits are used with the DEV<10:3> bits in the Device ID Register 2 to identify the part number

000 = PIC18F248
001 = PIC18F448
010 = PIC18F258
011 = PIC18F458

bit 4-0 **REV4:REV0:** Revision ID bits

These bits are used to indicate the device revision

Legend:		
R = Readable bit	P = Programmable bit	U = Unimplemented bit, read as '0'
- n = Value when device is unprogrammed		u = Unchanged from programmed state

REGISTER 24-12: DEVID2: DEVICE ID REGISTER 2 FOR PIC18FXX8 DEVICE (BYTE ADDRESS 3FFFFFh)

R	R	R	R	R	R	R	R
DEV10	DEV9	DEV8	DEV7	DEV6	DEV5	DEV4	DEV3
bit 7							bit 0

bit 7-0 **DEV10:DEV3:** Device ID bits

These bits are used with the DEV<2:0> bits in the Device ID Register 1 to identify the part number

00001000 = PIC18FXX8

Legend:		
R = Readable bit	P = Programmable bit	U = Unimplemented bit, read as '0'
- n = Value when device is unprogrammed		u = Unchanged from programmed state

24.2 Watchdog Timer (WDT)

The Watchdog Timer is a free running, on-chip RC oscillator, which does not require any external components. This RC oscillator is separate from the RC oscillator of the OSC1/CLKI pin. That means that the WDT will run, even if the clock on the OSC1/CLKI and OSC2/CLKO/RA6 pins of the device has been stopped, for example, by execution of a SLEEP instruction.

During normal operation, a WDT time-out generates a device RESET (Watchdog Timer Reset). If the device is in SLEEP mode, a WDT time-out causes the device to wake-up and continue with normal operation (Watchdog Timer Wake-up). The $\overline{TO}$ bit in the RCON register will be cleared upon a WDT time-out.

The Watchdog Timer is enabled/disabled by a device configuration bit. If the WDT is enabled, software execution may not disable this function. When the WDTEN configuration bit is cleared, the SWDTEN bit enables/disables the operation of the WDT.

The WDT time-out period values may be found in the Electrical Specifications section under parameter #31. Values for the WDT postscaler may be assigned using the configuration bits.

Note:	The CLRWDT and SLEEP instructions clear the WDT and the postscaler, if assigned to the WDT and prevent it from timing out and generating a device RESET condition.

Note:	When a CLRWDT instruction is executed and the postscaler is assigned to the WDT, the postscaler count will be cleared, but the postscaler assignment is not changed.

24.2.1 CONTROL REGISTER

Register 24-13 shows the WDTCON register. This is a readable and writable register, which contains a control bit that allows software to override the WDT enable configuration bit, only when the configuration bit has disabled the WDT.

REGISTER 24-13: WDTCON REGISTER

U-0	U-0	U-0	U-0	U-0	U-0	U-0	R/W-0
—	—	—	—	—	—	—	SWDTEN
bit 7							bit 0

bit 7-1 **Unimplemented**: Read as '0'

bit 0 **SWDTEN:** Software Controlled Watchdog Timer Enable bit
1 = Watchdog Timer is on
0 = Watchdog Timer is turned off if the WDTEN configuration bit in the Configuration register = 0

Legend:	
R = Readable bit	W = Writable bit
U = Unimplemented bit, read as '0'	- n = Value at POR

© 2003 Microchip Technology Inc.

24.2.2 WDT POSTSCALER

The WDT has a postscaler that can extend the WDT Reset period. The postscaler is selected at the time of the device programming, by the value written to the CONFIG2H configuration register.

FIGURE 24-1: WATCHDOG TIMER BLOCK DIAGRAM

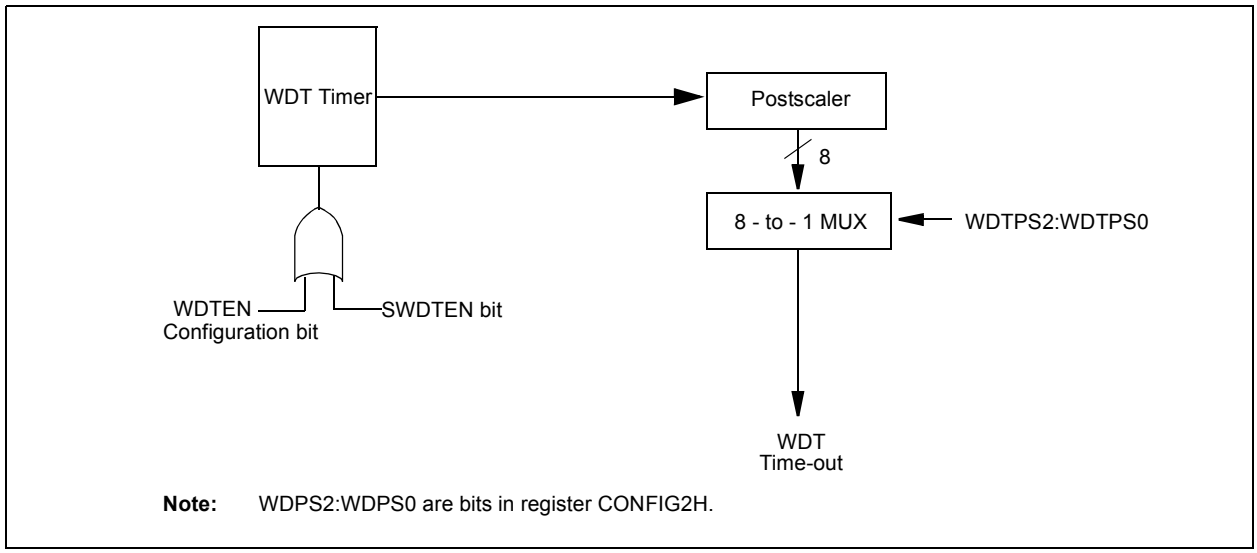

Note: WDPS2:WDPS0 are bits in register CONFIG2H.

TABLE 24-2: SUMMARY OF WATCHDOG TIMER REGISTERS

Name	Bit 7	Bit 6	Bit 5	Bit 4	Bit 3	Bit 2	Bit 1	Bit 0
CONFIG2H	—	—	—	—	WDTPS2	WDTPS2	WDTPS0	WDTEN
RCON	IPEN	—	—	$\overline{RI}$	$\overline{TO}$	$\overline{PD}$	$\overline{POR}$	$\overline{BOR}$
WDTCON	—	—	—	—	—	—	—	SWDTEN

Legend: Shaded cells are not used by the Watchdog Timer.

24.3 Power-down Mode (SLEEP)

Power-down mode is entered by executing a SLEEP instruction.

If enabled, the Watchdog Timer will be cleared, but keeps running, the $\overline{PD}$ bit (RCON<3>) is cleared, the $\overline{TO}$ (RCON<4>) bit is set, and the oscillator driver is turned off. The I/O ports maintain the status they had before the SLEEP instruction was executed (driving high, low or hi-impedance).

For lowest current consumption in this mode, place all I/O pins at either VDD or VSS, ensure no external circuitry is drawing current from the I/O pin, power-down the A/D and disable external clocks. Pull all I/O pins that are hi-impedance inputs, high or low externally, to avoid switching currents caused by floating inputs. The T0CKI input should also be at VDD or VSS for lowest current consumption. The contribution from on-chip pull-ups on PORTB should be considered.

The $\overline{MCLR}$ pin must be at a logic high level (VIHMC).

24.3.1 WAKE-UP FROM SLEEP

The device can wake-up from SLEEP through one of the following events:

1. External RESET input on $\overline{MCLR}$ pin.
2. Watchdog Timer Wake-up (if WDT was enabled).
3. Interrupt from INT pin, RB port change or a peripheral interrupt.

The following peripheral interrupts can wake the device from SLEEP:

1. PSP read or write.
2. TMR1 interrupt. Timer1 must be operating as an asynchronous counter.
3. TMR3 interrupt. Timer3 must be operating as an asynchronous counter.
4. CCP Capture mode interrupt.
5. Special event trigger (Timer1 in Asynchronous mode using an external clock).
6. MSSP (START/STOP) bit detect interrupt.
7. MSSP transmit or receive in Slave mode (SPI/I^2C).
8. USART RX or TX (Synchronous Slave mode).
9. A/D conversion (when A/D clock source is RC).
10. EEPROM write operation complete.
11. LVD interrupt.

Other peripherals cannot generate interrupts, since during SLEEP, no on-chip clocks are present.

External $\overline{MCLR}$ Reset will cause a device RESET. All other events are considered a continuation of program execution and will cause a “wake-up”. The $\overline{TO}$ and $\overline{PD}$ bits in the RCON register can be used to determine the cause of the device RESET. The $\overline{PD}$ bit, which is set on power-up, is cleared when SLEEP is invoked. The $\overline{TO}$ bit is cleared, if a WDT time-out occurred (and caused wake-up).

When the SLEEP instruction is being executed, the next instruction (PC + 2) is pre-fetched. For the device to wake-up through an interrupt event, the corresponding interrupt enable bit must be set (enabled). Wake-up is regardless of the state of the GIE bit. If the GIE bit is clear (disabled), the device continues execution at the instruction after the SLEEP instruction. If the GIE bit is set (enabled), the device executes the instruction after the SLEEP instruction and then branches to the interrupt address. In cases where the execution of the instruction following SLEEP is not desirable, the user should have a NOP after the SLEEP instruction.

24.3.2 WAKE-UP USING INTERRUPTS

When global interrupts are disabled (GIE cleared) and any interrupt source has both its interrupt enable bit and interrupt flag bit set, one of the following will occur:

- If an interrupt condition (interrupt flag bit and interrupt enable bits are set) occurs **before** the execution of a SLEEP instruction, the SLEEP instruction will complete as a NOP. Therefore, the WDT and WDT postscaler will not be cleared, the $\overline{TO}$ bit will not be set and $\overline{PD}$ bits will not be cleared.
- If the interrupt condition occurs **during or after** the execution of a SLEEP instruction, the device will immediately wake-up from SLEEP. The SLEEP instruction will be completely executed before the wake-up. Therefore, the WDT and WDT postscaler will be cleared, the $\overline{TO}$ bit will be set and the $\overline{PD}$ bit will be cleared.

Even if the flag bits were checked before executing a SLEEP instruction, it may be possible for flag bits to become set before the SLEEP instruction completes. To determine whether a SLEEP instruction executed, test the $\overline{PD}$ bit. If the $\overline{PD}$ bit is set, the SLEEP instruction was executed as a NOP.

To ensure that the WDT is cleared, a CLRWDT instruction should be executed before a SLEEP instruction.

© 2003 Microchip Technology Inc.

FIGURE 24-2: WAKE-UP FROM SLEEP THROUGH INTERRUPT(1,2)

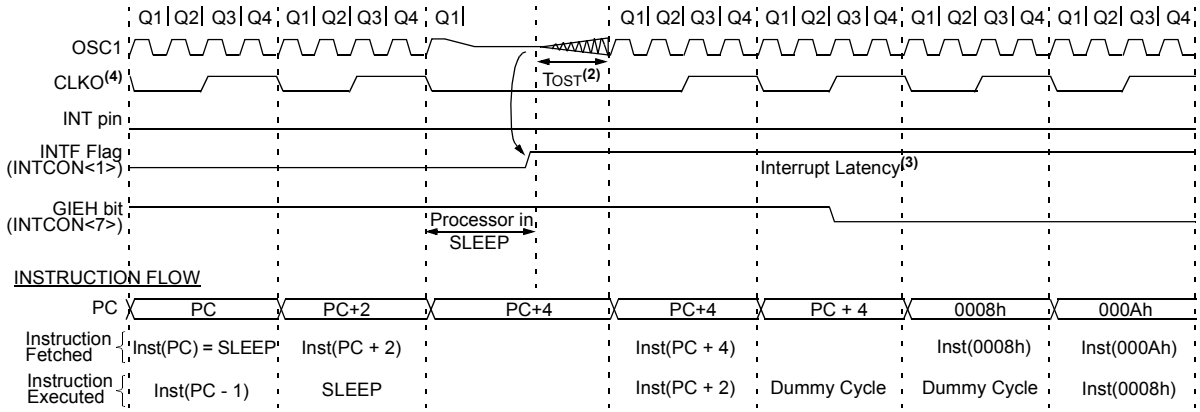

Note 1: XT, HS or LP Oscillator mode assumed.
2: GIE = 1 assumed. In this case, after wake-up, the processor jumps to the interrupt routine. If GIE = 0, execution will continue in-line.
3: TOST = 1024 TOSC (drawing not to scale). This delay will not occur for RC and EC Osc modes.
4: CLKO is not available in these Osc modes, but shown here for timing reference.

24.4 Program Verification and Code Protection

The overall structure of the code protection on the PIC18 FLASH devices differs significantly from other PICmicro devices.

The user program memory is divided into five blocks. One of these is a boot block of 512 bytes. The remainder of the memory is divided into four blocks on binary boundaries.

Each of the five blocks has three code protection bits associated with them. They are:

- Code Protect bit (CPn)
- Write Protect bit (WRTn)
- External Block Table Read bit (EBTRn)

Figure 24-3 shows the program memory organization for 16- and 32-Kbyte devices and the specific code protection bit associated with each block. The actual locations of the bits are summarized in Table 24-3.

FIGURE 24-3: CODE PROTECTED PROGRAM MEMORY FOR PIC18F2X8/4X8

MEMORY SIZE/DEVICE			
16 Kbytes (PIC18FX48)	32 Kbytes (PIC18FX58)	Address Range	Block Code Protection Controlled By:
Boot Block	Boot Block	000000h 0001FFh	CPB, WRTB, EBTRB
Block 0	Block 0	000200h 001FFFh	CP0, WRT0, EBTR0
Block 1	Block 1	002000h 003FFFh	CP1, WRT1, EBTR1
Unimplemented Read '0's	Block 2	004000h 005FFFh	CP2, WRT2, EBTR2
Unimplemented Read '0's	Block 3	006000h 007FFFh	CP3, WRT3, EBTR3
Unimplemented Read '0's	Unimplemented Read '0's	008000h 1FFFFFh	(Unimplemented Memory Space)

TABLE 24-3: SUMMARY OF CODE PROTECTION REGISTERS

File Name		Bit 7	Bit 6	Bit 5	Bit 4	Bit 3	Bit 2	Bit 1	Bit 0
300008h	CONFIG5L	—	—	—	—	CP3	CP2	CP1	CP0
300009h	CONFIG5H	CPD	CPB	—	—	—	—	—	—
30000Ah	CONFIG6L	—	—	—	—	WRT3	WRT2	WRT1	WRT0
30000Bh	CONFIG6H	WRTD	WRTB	WRTC	—	—	—	—	—
30000Ch	CONFIG7L	—	—	—	—	EBTR3	EBTR2	EBTR1	EBTR0
30000Dh	CONFIG7H	—	EBTRB	—	—	—	—	—	—

Legend: Shaded cells are unimplemented.

© 2003 Microchip Technology Inc.

24.4.1 PROGRAM MEMORY CODE PROTECTION

The user memory may be read to or written from any location using the Table Read and Table Write instructions. The device ID may be read with Table Reads. The configuration registers may be read and written with the Table Read and Table Write instructions.

In User mode, the CPn bits have no direct effect. CPn bits inhibit external reads and writes. A block of user memory may be protected from Table Writes if the WRTn configuration bit is '0'. The EBTRn bits control Table Reads. For a block of user memory with the EBTRn bit set to '0', a Table Read instruction that executes from within that block is allowed to read. A Table Read instruction that executes from a location outside of that block is not allowed to read, and will result in reading '0's. Figures 24-4 through 24-6 illustrate Table Write and Table Read protection.

Note:	Code protection bits may only be written to a '0' from a '1' state. It is not possible to write a '1' to a bit in the '0' state. Code protection bits are only set to '1' by a full chip erase or block erase function. The full chip erase and block erase functions can only be initiated via ICSP or an external programmer.

FIGURE 24-4: TABLE WRITE (WRTn) DISALLOWED

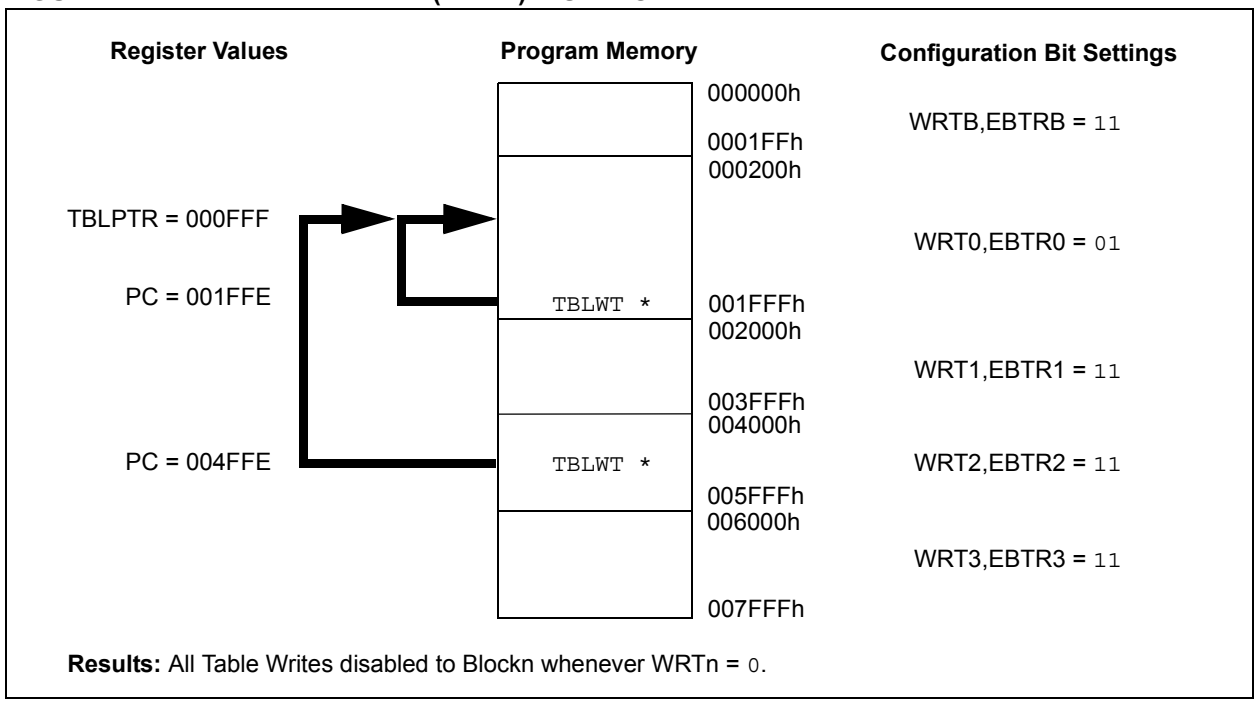

Results: All Table Writes disabled to Blockn whenever WRTn = 0.

FIGURE 24-5: EXTERNAL BLOCK TABLE READ (EBTRn) DISALLOWED

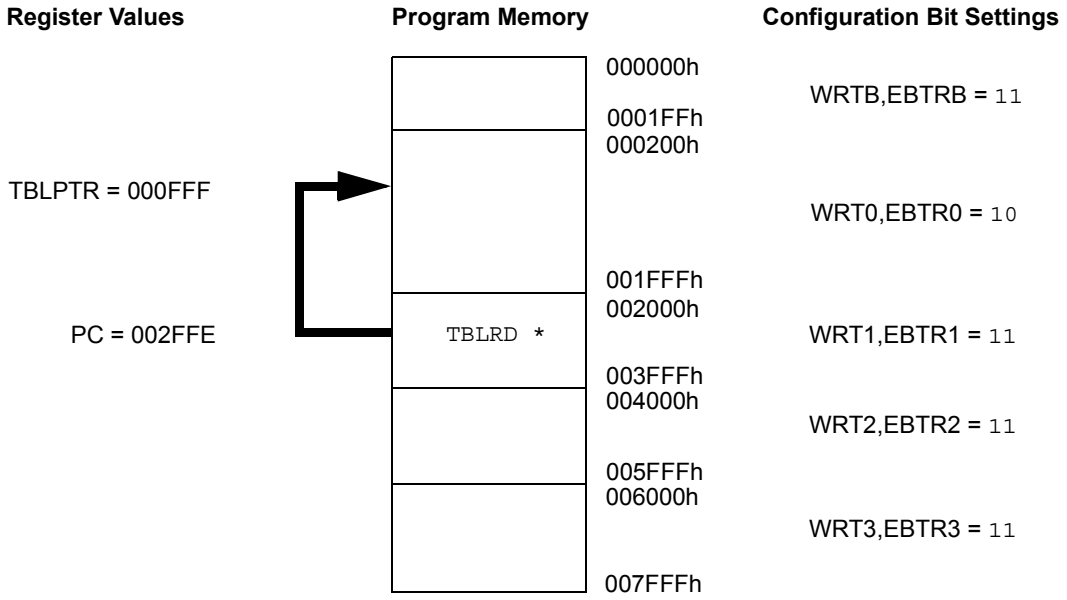

Results: All Table Reads from external blocks to Blockn are disabled whenever EBTRn = 0.
TABLAT register returns a value of '0'.

FIGURE 24-6: EXTERNAL BLOCK TABLE READ (EBTRn) ALLOWED

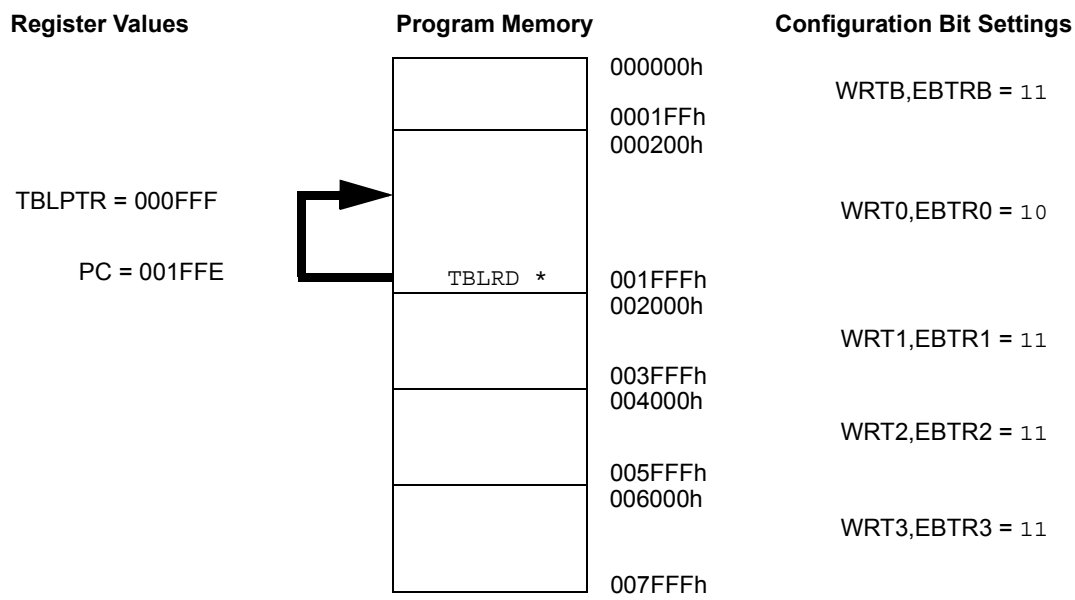

Results: Table Reads permitted within Blockn, even when EBTRBn = 0.
TABLAT register returns the value of the data at the location TBLPTR.

© 2003 Microchip Technology Inc.

24.4.2 DATA EEPROM CODE PROTECTION

The entire data EEPROM is protected from external reads and writes by two bits: CPD and WRTD. CPD inhibits external reads and writes of data EEPROM. WRTD inhibits external writes to data EEPROM. The CPU can continue to read and write data EEPROM, regardless of the protection bit settings.

24.4.3 CONFIGURATION REGISTER PROTECTION

The configuration registers can be write protected. The WRTC bit controls protection of the configuration registers. In User mode, the WRTC bit is readable only. WRTC can only be written via ICSP or an external programmer.

24.5 ID Locations

Eight memory locations (200000h - 200007h) are designated as ID locations, where the user can store checksum or other code identification numbers. These locations are accessible during normal execution through the TBLRD and TBLWT instructions, or during program/verify. The ID locations can be read when the device is code protected.

24.6 In-Circuit Serial Programming

PIC18FXXX microcontrollers can be serially programmed while in the end application circuit. This is simply done with two lines for clock and data, and three other lines for power, ground and the programming voltage. This allows customers to manufacture boards with unprogrammed devices, and then program the microcontroller just before shipping the product. This also allows the most recent firmware or a custom firmware to be programmed.

24.7 In-Circuit Debugger

When the DEBUG bit in configuration register, CONFIG4L, is programmed to a '0', the In-Circuit Debugger functionality is enabled. This function allows simple debugging functions when used with MPLAB® IDE. When the microcontroller has this feature enabled, some of the resources are not available for general use. Resources used include 2 I/O pins, stack locations, program memory and data memory. For more information on the resources required, see the User's Guide for the In-Circuit Debugger you are using.

To use the In-Circuit Debugger function of the microcontroller, the design must implement In-Circuit Serial Programming connections to $\overline{MCLR}$/VPP, VDD, GND, RB7 and RB6. This will interface to the In-Circuit Debugger module available from Microchip, or one of the third party development tool companies. The Microchip In-Circuit Debugger (ICD) used with the PIC18FXXX microcontrollers is the MPLAB® ICD 2.

24.8 Low Voltage ICSP Programming

The LVP bit in configuration register, CONFIG4L, enables low voltage ICSP programming. This mode allows the microcontroller to be programmed via ICSP using a VDD source in the operating voltage range. This only means that VPP does not have to be brought to VIHH, but can instead be left at the normal operating voltage. In this mode, the RB5/PGM pin is dedicated to the programming function and ceases to be a general purpose I/O pin. During programming, VDD is applied to the $\overline{MCLR}$/VPP pin. To enter Programming mode, VDD must be applied to the RB5/PGM, provided the LVP bit is set. The LVP bit defaults to a ('1') from the factory.

Note 1: The High Voltage Programming mode is always available, regardless of the state of the LVP bit, by applying VIHH to the $\overline{MCLR}$ pin.

2: While in Low Voltage ICSP mode, the RB5 pin can no longer be used as a general purpose I/O pin.

3: When using Low Voltage ICSP programming (LVP) and the pull-ups on PORTB are enabled, bit 5 in the TRISB register must be cleared to disable the pull-up on RB5 and ensure the proper operation of the device.

If Low Voltage Programming mode is not used, the LVP bit can be programmed to a '0' and RB5/PGM becomes a digital I/O pin. However, the LVP bit may only be programmed when programming is entered with VIHH on $\overline{MCLR}$/VPP. The LVP bit can only be charged when using high voltage on $\overline{MCLR}$.

It should be noted that once the LVP bit is programmed to '0', only the High Voltage Programming mode is available and only High Voltage Programming mode can be used to program the device.

When using Low Voltage ICSP, the part must be supplied 4.5V to 5.5V, if a bulk erase will be executed. This includes reprogramming of the code protect bits from an on-state to off-state. For all other cases of Low Voltage ICSP, the part may be programmed at the normal operating voltage. This means unique user IDs, or user code can be reprogrammed or added.

NOTES:

© 2003 Microchip Technology Inc.

25.0 INSTRUCTION SET SUMMARY

The PIC18 instruction set adds many enhancements to the previous PICmicro instruction sets, while maintaining an easy migration from these PICmicro instruction sets.

Most instructions are a single program memory word (16 bits), but there are three instructions that require two program memory locations.

Each single word instruction is a 16-bit word divided into an OPCODE, which specifies the instruction type and one or more operands, which further specify the operation of the instruction.

The instruction set is highly orthogonal and is grouped into four basic categories:

- **Byte-oriented** operations
- **Bit-oriented** operations
- **Literal** operations
- **Control** operations

The PIC18 instruction set summary in Table 25-2 lists **byte-oriented**, **bit-oriented**, **literal** and **control** operations. Table 25-1 shows the opcode field descriptions.

Most **byte-oriented** instructions have three operands:

1. The file register (specified by ‘f’)
2. The destination of the result (specified by ‘d’)
3. The accessed memory (specified by ‘a’)

The file register designator 'f' specifies which file register is to be used by the instruction.

The destination designator ‘d’ specifies where the result of the operation is to be placed. If 'd' is zero, the result is placed in the WREG register. If 'd' is one, the result is placed in the file register specified in the instruction.

All **bit-oriented** instructions have three operands:

1. The file register (specified by ‘f’)
2. The bit in the file register (specified by ‘b’)
3. The accessed memory (specified by ‘a’)

The bit field designator 'b' selects the number of the bit affected by the operation, while the file register designator 'f' represents the number of the file in which the bit is located.

The **literal** instructions may use some of the following operands:

- A literal value to be loaded into a file register (specified by ‘k’)
- The desired FSR register to load the literal value into (specified by ‘f’)
- No operand required (specified by ‘—’)

The **control** instructions may use some of the following operands:

- A program memory address (specified by ‘n’)
- The mode of the Call or Return instructions (specified by ‘s’)
- The mode of the Table Read and Table Write instructions (specified by ‘m’)
- No operand required (specified by ‘—’)

All instructions are a single word, except for three double-word instructions. These three instructions were made double-word instructions so that all the required information is available in these 32 bits. In the second word, the 4 MSbs are 1’s. If this second word is executed as an instruction (by itself), it will execute as a `NOP`.

All single word instructions are executed in a single instruction cycle, unless a conditional test is true or the program counter is changed as a result of the instruction. In these cases, the execution takes two instruction cycles, with the additional instruction cycle(s) executed as a `NOP`.

The double-word instructions execute in two instruction cycles.

One instruction cycle consists of four oscillator periods. Thus, for an oscillator frequency of 4 MHz, the normal instruction execution time is 1 μs. If a conditional test is true, or the program counter is changed as a result of an instruction, the instruction execution time is 2 μs. Two-word branch instructions (if true) would take 3 μs.

Figure 25-1 shows the general formats that the instructions can have.

All examples use the format ‘`nnh`’ to represent a hexadecimal number, where ‘`h`’ signifies a hexadecimal digit.

The Instruction Set Summary, shown in Table 25-2, lists the instructions recognized by the Microchip Assembler (MPASM™).

Section 25.2 provides a description of each instruction.

25.1 READ-MODIFY-WRITE OPERATIONS

Any instruction that specifies a file register as part of the instruction performs a Read-Modify-Write (R-M-W) operation. The register is read, the data is modified, and the result is stored according to either the instruction or the destination designator ‘d’. A read operation is performed on a register even if the instruction writes to that register.

For example, a “`clrf PORTB`” instruction will read PORTB, clear all the data bits, then write the result back to PORTB. This example would have the unintended result that the condition that sets the RBIF flag would be cleared.

TABLE 25-1: OPCODE FIELD DESCRIPTIONS

Field	Description
a	RAM access bit a = 0: RAM location in Access RAM (BSR register is ignored) a = 1: RAM bank is specified by BSR register
bbb	Bit address within an 8-bit file register (0 to 7)
BSR	Bank Select Register. Used to select the current RAM bank.
d	Destination select bit; d = 0: store result in WREG, d = 1: store result in file register f.
dest	Destination either the WREG register or the specified register file location
f	8-bit Register file address (0x00 to 0xFF)
fs	12-bit Register file address (0x000 to 0xFFF). This is the source address.
fd	12-bit Register file address (0x000 to 0xFFF). This is the destination address.
k	Literal field, constant data or label (may be either an 8-bit, 12-bit or a 20-bit value)
label	Label name
mm * *+ *- +*	The mode of the TBLPTR register for the Table Read and Table Write instructions. Only used with Table Read and Table Write instructions: No change to register (such as TBLPTR with Table Reads and Writes) Post-Increment register (such as TBLPTR with Table Reads and Writes) Post-Decrement register (such as TBLPTR with Table Reads and Writes) Pre-Increment register (such as TBLPTR with Table Reads and Writes)
n	The relative address (2's complement number) for relative branch instructions, or the direct address for Call/Branch and Return instructions
PRODH	Product of Multiply high byte
PRODL	Product of Multiply low byte
s	Fast Call/Return mode select bit; s = 0: do not update into/from shadow registers s = 1: certain registers loaded into/from shadow registers (Fast mode)
u	Unused or Unchanged
WREG	Working register (accumulator)
x	Don't care (0 or 1). The assembler will generate code with x = 0. It is the recommended form of use for compatibility with all Microchip software tools.
TBLPTR	21-bit Table Pointer (points to a Program Memory location)
TABLAT	8-bit Table Latch
TOS	Top-of-Stack
PC	Program Counter
PCL	Program Counter Low Byte
PCH	Program Counter High Byte
PCLATH	Program Counter High Byte Latch
PCLATU	Program Counter Upper Byte Latch
GIE	Global Interrupt Enable bit
WDT	Watchdog Timer
$\overline{TO}$	Time-out bit
$\overline{PD}$	Power-down bit
C, DC, Z, OV, N	ALU status bits Carry, Digit Carry, Zero, Overflow, Negative
[ ]	Optional
( )	Contents
→	Assigned to
< >	Register bit field
∈	In the set of
italics	User defined term (font is courier)

© 2003 Microchip Technology Inc.

FIGURE 25-1: GENERAL FORMAT FOR INSTRUCTIONS

Byte-oriented file register operations

Example Instruction

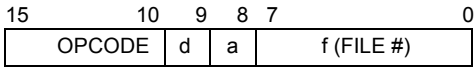

ADDWF MYREG, W, B

d = 0 for result destination to be WREG register
d = 1 for result destination to be file register (f)
a = 0 to force Access Bank
a = 1 for BSR to select bank
f = 8-bit file register address

Byte to Byte move operations (2-word)

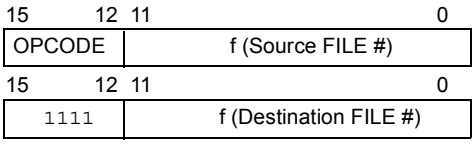

MOVFF MYREG1, MYREG2

f = 12-bit file register address

Bit-oriented file register operations

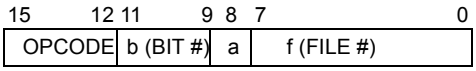

BSF MYREG, bit, B

b = 3-bit position of bit in file register (f)
a = 0 to force Access Bank
a = 1 for BSR to select bank
f = 8-bit file register address

Literal operations

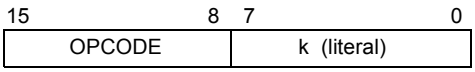

MOVLW 0x7F

k = 8-bit immediate value

Control operations

CALL, GOTO and Branch operations

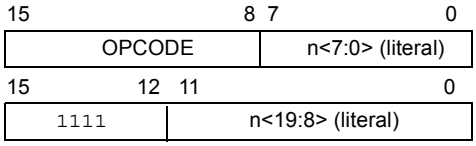

GOTO Label

n = 20-bit immediate value

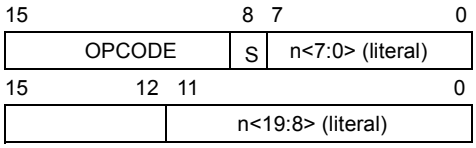

CALL MYFUNC

S = Fast bit

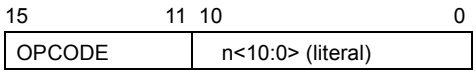

BRA MYFUNC

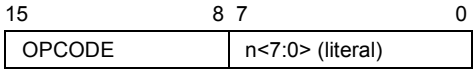

BC MYFUNC

TABLE 25-2: PIC18FXXX INSTRUCTION SET

Mnemonic, Operands		Description	Cycles	16-Bit Instruction Word MSb LSb	Status Affected	Notes
BYTE-ORIENTED FILE REGISTER OPERATIONS						
ADDWF	f, d, a	Add WREG and f	1	0010 01da ffff ffff	C, DC, Z, OV, N	1, 2
ADDWFC	f, d, a	Add WREG and Carry bit to f	1	0010 00da ffff ffff	C, DC, Z, OV, N	1, 2
ANDWF	f, d, a	AND WREG with f	1	0001 01da ffff ffff	Z, N	1,2
CLRF	f, a	Clear f	1	0110 101a ffff ffff	Z	2
COMF	f, d, a	Complement f	1	0001 11da ffff ffff	Z, N	1, 2
CPFSEQ	f, a	Compare f with WREG, skip =	1 (2 or 3)	0110 001a ffff ffff	None	4
CPFSGT	f, a	Compare f with WREG, skip >	1 (2 or 3)	0110 010a ffff ffff	None	4
CPFSLT	f, a	Compare f with WREG, skip <	1 (2 or 3)	0110 000a ffff ffff	None	1, 2
DECF	f, d, a	Decrement f	1	0000 01da ffff ffff	C, DC, Z, OV, N	1, 2, 3, 4
DECFSZ	f, d, a	Decrement f, Skip if 0	1 (2 or 3)	0010 11da ffff ffff	None	1, 2, 3, 4
DCFSNZ	f, d, a	Decrement f, Skip if Not 0	1 (2 or 3)	0100 11da ffff ffff	None	1, 2
INCF	f, d, a	Increment f	1	0010 10da ffff ffff	C, DC, Z, OV, N	1, 2, 3, 4
INCFSZ	f, d, a	Increment f, Skip if 0	1 (2 or 3)	0011 11da ffff ffff	None	4
INFSNZ	f, d, a	Increment f, Skip if Not 0	1 (2 or 3)	0100 10da ffff ffff	None	1, 2
IORWF	f, d, a	Inclusive OR WREG with f	1	0001 00da ffff ffff	Z, N	1, 2
MOVF	f, d, a	Move f	1	0101 00da ffff ffff	Z, N	1
MOVFF	f_s, f_d	Move f_s (source) to 1st word f_d (destination) 2nd word	2	1100 ffff ffff ffff 1111 ffff ffff ffff	None	
MOVWF	f, a	Move WREG to f	1	0110 111a ffff ffff	None	
MULWF	f, a	Multiply WREG with f	1	0000 001a ffff ffff	None	
NEGF	f, a	Negate f	1	0110 110a ffff ffff	C, DC, Z, OV, N	1, 2
RLCF	f, d, a	Rotate Left f through Carry	1	0011 01da ffff ffff	C, Z, N	
RLNCF	f, d, a	Rotate Left f (No Carry)	1	0100 01da ffff ffff	Z, N	1, 2
RRCF	f, d, a	Rotate Right f through Carry	1	0011 00da ffff ffff	C, Z, N	
RRNCF	f, d, a	Rotate Right f (No Carry)	1	0100 00da ffff ffff	Z, N	
SETF	f, a	Set f	1	0110 100a ffff ffff	None	
SUBFWB	f, d, a	Subtract f from WREG with borrow	1	0101 01da ffff ffff	C, DC, Z, OV, N	1, 2
SUBWF	f, d, a	Subtract WREG from f	1	0101 11da ffff ffff	C, DC, Z, OV, N	
SUBWFB	f, d, a	Subtract WREG from f with borrow	1	0101 10da ffff ffff	C, DC, Z, OV, N	1, 2
SWAPF	f, d, a	Swap nibbles in f	1	0011 10da ffff ffff	None	4
TSTFSZ	f, a	Test f, skip if 0	1 (2 or 3)	0110 011a ffff ffff	None	1, 2
XORWF	f, d, a	Exclusive OR WREG with f	1	0001 10da ffff ffff	Z, N	
BIT-ORIENTED FILE REGISTER OPERATIONS						
BCF	f, b, a	Bit Clear f	1	1001 bbba ffff ffff	None	1, 2
BSF	f, b, a	Bit Set f	1	1000 bbba ffff ffff	None	1, 2
BTFSC	f, b, a	Bit Test f, Skip if Clear	1 (2 or 3)	1011 bbba ffff ffff	None	3, 4
BTFSS	f, b, a	Bit Test f, Skip if Set	1 (2 or 3)	1010 bbba ffff ffff	None	3, 4
BTG	f, d, a	Bit Toggle f	1	0111 bbba ffff ffff	None	1, 2

Note 1: When a PORT register is modified as a function of itself (e.g., `MOVF PORTB, 1, 0`), the value used will be that value present on the pins themselves. For example, if the data latch is '1' for a pin configured as input and is driven low by an external device, the data will be written back with a '0'.

2: If this instruction is executed on the TMR0 register (and, where applicable, d = `1`), the prescaler will be cleared if assigned.

3: If Program Counter (PC) is modified or a conditional test is true, the instruction requires two cycles. The second cycle is executed as a `NOP`.

4: Some instructions are 2-word instructions. The second word of these instructions will be executed as a `NOP`, unless the first word of the instruction retrieves the information embedded in these 16 bits. This ensures that all program memory locations have a valid instruction.

5: If the Table Write starts the write cycle to internal memory, the write will continue until terminated.

© 2003 Microchip Technology Inc.

TABLE 25-2: PIC18FXXX INSTRUCTION SET (CONTINUED)

Mnemonic, Operands		Description	Cycles	16-Bit Instruction Word MSb LSb	Status Affected	Notes
CONTROL OPERATIONS						
BC	n	Branch if Carry	1 (2)	1110 0010 nnnn nnnn	None	
BN	n	Branch if Negative	1 (2)	1110 0110 nnnn nnnn	None	
BNC	n	Branch if Not Carry	1 (2)	1110 0011 nnnn nnnn	None	
BNN	n	Branch if Not Negative	1 (2)	1110 0111 nnnn nnnn	None	
BNOV	n	Branch if Not Overflow	1 (2)	1110 0101 nnnn nnnn	None	
BNZ	n	Branch if Not Zero	2	1110 0001 nnnn nnnn	None	
BOV	n	Branch if Overflow	1 (2)	1110 0100 nnnn nnnn	None	
BRA	n	Branch Unconditionally	1 (2)	1101 0nnn nnnn nnnn	None	
BZ	n	Branch if Zero	1 (2)	1110 0000 nnnn nnnn	None	
CALL	n, s	Call subroutine 1st word	2	1110 110s kkkk kkkk	None	
		2nd word		1111 kkkk kkkk kkkk		
CLRWDT	—	Clear Watchdog Timer	1	0000 0000 0000 0100	$\overline{TO}$, $\overline{PD}$	
DAW	—	Decimal Adjust WREG	1	0000 0000 0000 0111	C	
GOTO	n	Go to address 1st word	2	1110 1111 kkkk kkkk	None	
		2nd word		1111 kkkk kkkk kkkk		
NOP	—	No Operation	1	0000 0000 0000 0000	None	
NOP	—	No Operation	1	1111 xxxx xxxx xxxx	None	4
POP	—	Pop top of return stack (TOS)	1	0000 0000 0000 0110	None	
PUSH	—	Push top of return stack (TOS)	1	0000 0000 0000 0101	None	
RCALL	n	Relative Call	2	1101 1nnn nnnn nnnn	None	
RESET		Software device RESET	1	0000 0000 1111 1111	All	
RETFIE	s	Return from interrupt enable	2	0000 0000 0001 000s	GIE/GIEH, PEIE/GIEL	
RETLW	k	Return with literal in WREG	2	0000 1100 kkkk kkkk	None	
RETURN	s	Return from Subroutine	2	0000 0000 0001 001s	None	
SLEEP	—	Go into Standby mode	1	0000 0000 0000 0011	$\overline{TO}$, $\overline{PD}$	

Note 1: When a PORT register is modified as a function of itself (e.g., `MOVF PORTB, 1, 0`), the value used will be that value present on the pins themselves. For example, if the data latch is '1' for a pin configured as input and is driven low by an external device, the data will be written back with a '0'.

2: If this instruction is executed on the TMR0 register (and, where applicable, d = `1`), the prescaler will be cleared if assigned.

3: If Program Counter (PC) is modified or a conditional test is true, the instruction requires two cycles. The second cycle is executed as a `NOP`.

4: Some instructions are 2-word instructions. The second word of these instructions will be executed as a `NOP`, unless the first word of the instruction retrieves the information embedded in these 16 bits. This ensures that all program memory locations have a valid instruction.

5: If the Table Write starts the write cycle to internal memory, the write will continue until terminated.

TABLE 25-2: PIC18FXXX INSTRUCTION SET (CONTINUED)

Mnemonic, Operands	Description	Cycles	16-Bit Instruction Word MSb LSb	Status Affected	Notes
LITERAL OPERATIONS					
ADDLW k	Add literal and WREG	1	0000 1111 kkkk kkkk	C, DC, Z, OV, N	
ANDLW k	AND literal with WREG	1	0000 1011 kkkk kkkk	Z, N	
IORLW k	Inclusive OR literal with WREG	1	0000 1001 kkkk kkkk	Z, N	
LFSR f, k	Move literal (12-bit) 2nd word to FSRx 1st word	2	1110 1110 00ff kkkk 1111 0000 kkkk kkkk	None	
MOVLB k	Move literal to BSR<3:0>	1	0000 0001 0000 kkkk	None	
MOVLW k	Move literal to WREG	1	0000 1110 kkkk kkkk	None	
MULLW k	Multiply literal with WREG	1	0000 1101 kkkk kkkk	None	
RETLW k	Return with literal in WREG	2	0000 1100 kkkk kkkk	None	
SUBLW k	Subtract WREG from literal	1	0000 1000 kkkk kkkk	C, DC, Z, OV, N	
XORLW k	Exclusive OR literal with WREG	1	0000 1010 kkkk kkkk	Z, N	
DATA MEMORY ↔ PROGRAM MEMORY OPERATIONS					
TBLRD*	Table Read	2	0000 0000 0000 1000	None	
TBLRD*+	Table Read with post-increment		0000 0000 0000 1001	None	
TBLRD*-	Table Read with post-decrement		0000 0000 0000 1010	None	
TBLRD+*	Table Read with pre-increment		0000 0000 0000 1011	None	
TBLWT*	Table Write	2 (5)	0000 0000 0000 1100	None	
TBLWT*+	Table Write with post-increment		0000 0000 0000 1101	None	
TBLWT*-	Table Write with post-decrement		0000 0000 0000 1110	None	
TBLWT+*	Table Write with pre-increment		0000 0000 0000 1111	None	

Note 1: When a PORT register is modified as a function of itself (e.g., `MOVF PORTB, 1, 0`), the value used will be that value present on the pins themselves. For example, if the data latch is '1' for a pin configured as input and is driven low by an external device, the data will be written back with a '0'.

2: If this instruction is executed on the TMR0 register (and, where applicable, d = `1`), the prescaler will be cleared if assigned.

3: If Program Counter (PC) is modified or a conditional test is true, the instruction requires two cycles. The second cycle is executed as a `NOP`.

4: Some instructions are 2-word instructions. The second word of these instructions will be executed as a `NOP`, unless the first word of the instruction retrieves the information embedded in these 16 bits. This ensures that all program memory locations have a valid instruction.

5: If the Table Write starts the write cycle to internal memory, the write will continue until terminated.

© 2003 Microchip Technology Inc.

25.2 Instruction Set

ADDLW **ADD literal to W**

Syntax: [*label*] ADDLW k

Operands: $0 \le k \le 255$

Operation: $(W) + k \rightarrow W$

Status Affected: N, OV, C, DC, Z

Encoding:

0000	1111	kkkk	kkkk

Description: The contents of W are added to the 8-bit literal 'k' and the result is placed in W.

Words: 1

Cycles: 1

Q Cycle Activity:

Q1	Q2	Q3	Q4
Decode	Read literal 'k'	Process Data	Write to W

Example: `ADDLW 0x15`

Before Instruction
W = 0x10

After Instruction
W = 0x25

ADDWF **ADD W to f**

Syntax: [*label*] ADDWF f [,d [,a]]

Operands: $0 \le f \le 255$
$d \in [0,1]$
$a \in [0,1]$

Operation: $(W) + (f) \rightarrow$ dest

Status Affected: N, OV, C, DC, Z

Encoding:

0010	01da	ffff	ffff

Description: Add W to register 'f'. If 'd' is 0, the result is stored in W. If 'd' is 1, the result is stored back in register 'f' (default). If 'a' is 0, the Access Bank will be selected. If 'a' is 1, the BSR is used.

Words: 1

Cycles: 1

Q Cycle Activity:

Q1	Q2	Q3	Q4
Decode	Read register 'f'	Process Data	Write to destination

Example: `ADDWF REG, W`

Before Instruction
W = 0x17
REG = 0xC2

After Instruction
W = 0xD9
REG = 0xC2

ADDWFC **ADD W and Carry bit to f**

Syntax: [*label*] ADDWFC f [,d [,a]]

Operands: $0 \le f \le 255$
$d \in [0,1]$
$a \in [0,1]$

Operation: (W) + (f) + (C) → dest

Status Affected: N, OV, C, DC, Z

Encoding:

0010	00da	ffff	ffff

Description: Add W, the Carry Flag and data memory location 'f'. If 'd' is 0, the result is placed in W. If 'd' is 1, the result is placed in data memory location 'f'. If 'a' is 0, the Access Bank will be selected. If 'a' is 1, the BSR will not be overridden.

Words: 1

Cycles: 1

Q Cycle Activity:

Q1	Q2	Q3	Q4
Decode	Read register 'f'	Process Data	Write to destination

Example: `ADDWFC REG, W`

Before Instruction
Carry bit = 1
REG = 0x02
W = 0x4D

After Instruction
Carry bit = 0
REG = 0x02
W = 0x50

ANDLW **AND literal with W**

Syntax: [*label*] ANDLW k

Operands: $0 \le k \le 255$

Operation: (W) .AND. k → W

Status Affected: N, Z

Encoding:

0000	1011	kkkk	kkkk

Description: The contents of W are ANDed with the 8-bit literal 'k'. The result is placed in W.

Words: 1

Cycles: 1

Q Cycle Activity:

Q1	Q2	Q3	Q4
Decode	Read literal 'k'	Process Data	Write to W

Example: `ANDLW 0x5F`

Before Instruction
W = 0xA3

After Instruction
W = 0x03

© 2003 Microchip Technology Inc.

ANDWF **AND W with f**

Syntax: [*label*] ANDWF f [,d [,a]]

Operands: $0 \le f \le 255$
$d \in [0,1]$
$a \in [0,1]$

Operation: (W) .AND. (f) → dest

Status Affected: N, Z

Encoding:

0001	01da	ffff	ffff

Description: The contents of W are AND'ed with register 'f'. If 'd' is 0, the result is stored in W. If 'd' is 1, the result is stored back in register 'f' (default). If 'a' is 0, the Access Bank will be selected. If 'a' is 1, the BSR will not be overridden (default).

Words: 1

Cycles: 1

Q Cycle Activity:

Q1	Q2	Q3	Q4
Decode	Read register 'f'	Process Data	Write to destination

Example: `ANDWF REG, W`

Before Instruction
W = 0x17
REG = 0xC2

After Instruction
W = 0x02
REG = 0xC2

BC **Branch if Carry**

Syntax: [*label*] BC n

Operands: $-128 \le n \le 127$

Operation: if carry bit is '1'
(PC) + 2 + 2n → PC

Status Affected: None

Encoding:

1110	0010	nnnn	nnnn

Description: If the Carry bit is '1', then the program will branch.
The 2's complement number '2n' is added to the PC. Since the PC will have incremented to fetch the next instruction, the new address will be PC+2+2n. This instruction is then a two-cycle instruction.

Words: 1

Cycles: 1(2)

Q Cycle Activity:
If Jump:

Q1	Q2	Q3	Q4
Decode	Read literal 'n'	Process Data	Write to PC
No operation	No operation	No operation	No operation

If No Jump:

Q1	Q2	Q3	Q4
Decode	Read literal 'n'	Process Data	No operation

Example:
```
HERE    BC   JUMP
```

Before Instruction
PC = address (HERE)

After Instruction
If Carry = 1;
PC = address (JUMP)
If Carry = 0;
PC = address (HERE+2)

BCF **Bit Clear f**

Syntax: [*label*] BCF f,b[,a]

Operands: $0 \le f \le 255$
$0 \le b \le 7$
$a \in [0,1]$

Operation: $0 \rightarrow f<b>$

Status Affected: None

Encoding:

1001	bbba	ffff	ffff

Description: Bit 'b' in register 'f' is cleared. If 'a' is 0, the Access Bank will be selected, overriding the BSR value. If 'a' = 1, then the bank will be selected as per the BSR value (default).

Words: 1

Cycles: 1

Q Cycle Activity:

Q1	Q2	Q3	Q4
Decode	Read register 'f'	Process Data	Write register 'f'

Example: `BCF FLAG_REG, 7`

Before Instruction
FLAG_REG = 0xC7
After Instruction
FLAG_REG = 0x47

BN **Branch if Negative**

Syntax: [*label*] BN n

Operands: $-128 \le n \le 127$

Operation: if negative bit is '1'
$(PC) + 2 + 2n \rightarrow PC$

Status Affected: None

Encoding:

1110	0110	nnnn	nnnn

Description: If the Negative bit is '1', then the program will branch.
The 2's complement number '2n' is added to the PC. Since the PC will have incremented to fetch the next instruction, the new address will be PC+2+2n. This instruction is then a two-cycle instruction.

Words: 1

Cycles: 1(2)

Q Cycle Activity:
If Jump:

Q1	Q2	Q3	Q4
Decode	Read literal 'n'	Process Data	Write to PC
No operation	No operation	No operation	No operation

If No Jump:

Q1	Q2	Q3	Q4
Decode	Read literal 'n'	Process Data	No operation

Example: `HERE BN Jump`

Before Instruction
PC = address `(HERE)`
After Instruction
If Negative = 1;
PC = address `(Jump)`
If Negative = 0;
PC = address `(HERE+2)`

© 2003 Microchip Technology Inc.

BNC **Branch if Not Carry**

Syntax: [*label*] BNC n

Operands: -128 ≤ n ≤ 127

Operation: if carry bit is '0'
(PC) + 2 + 2n → PC

Status Affected: None

Encoding:

1110	0011	nnnn	nnnn

Description: If the Carry bit is '0', then the program will branch.
The 2's complement number '2n' is added to the PC. Since the PC will have incremented to fetch the next instruction, the new address will be PC+2+2n. This instruction is then a two-cycle instruction.

Words: 1

Cycles: 1(2)

Q Cycle Activity:

If Jump:

Q1	Q2	Q3	Q4
Decode	Read literal 'n'	Process Data	Write to PC
No operation	No operation	No operation	No operation

If No Jump:

Q1	Q2	Q3	Q4
Decode	Read literal 'n'	Process Data	No operation

Example: `HERE BNC Jump`

Before Instruction
PC = address `(HERE)`
After Instruction
If Carry = 0;
PC = address `(Jump)`
If Carry = 1;
PC = address `(HERE+2)`

BNN **Branch if Not Negative**

Syntax: [*label*] BNN n

Operands: -128 ≤ n ≤ 127

Operation: if negative bit is '0'
(PC) + 2 + 2n → PC

Status Affected: None

Encoding:

1110	0111	nnnn	nnnn

Description: If the Negative bit is '0', then the program will branch.
The 2's complement number '2n' is added to the PC. Since the PC will have incremented to fetch the next instruction, the new address will be PC+2+2n. This instruction is then a two-cycle instruction.

Words: 1

Cycles: 1(2)

Q Cycle Activity:

If Jump:

Q1	Q2	Q3	Q4
Decode	Read literal 'n'	Process Data	Write to PC
No operation	No operation	No operation	No operation

If No Jump:

Q1	Q2	Q3	Q4
Decode	Read literal 'n'	Process Data	No operation

Example: `HERE BNN Jump`

Before Instruction
PC = address `(HERE)`
After Instruction
If Negative = 0;
PC = address `(Jump)`
If Negative = 1;
PC = address `(HERE+2)`

BNOV **Branch if Not Overflow**

Syntax: [*label*] BNOV n

Operands: -128 ≤ n ≤ 127

Operation: if overflow bit is '0'
(PC) + 2 + 2n → PC

Status Affected: None

Encoding:

1110	0101	nnnn	nnnn

Description: If the Overflow bit is '0', then the program will branch.
The 2's complement number '2n' is added to the PC. Since the PC will have incremented to fetch the next instruction, the new address will be PC+2+2n. This instruction is then a two-cycle instruction.

Words: 1

Cycles: 1(2)

Q Cycle Activity:
If Jump:

Q1	Q2	Q3	Q4
Decode	Read literal 'n'	Process Data	Write to PC
No operation	No operation	No operation	No operation

If No Jump:

Q1	Q2	Q3	Q4
Decode	Read literal 'n'	Process Data	No operation

Example: `HERE BNOV Jump`

Before Instruction
PC = address (HERE)
After Instruction
If Overflow = 0;
PC = address (Jump)
If Overflow = 1;
PC = address (HERE+2)

BNZ **Branch if Not Zero**

Syntax: [*label*] BNZ n

Operands: -128 ≤ n ≤ 127

Operation: if zero bit is '0'
(PC) + 2 + 2n → PC

Status Affected: None

Encoding:

1110	0001	nnnn	nnnn

Description: If the Zero bit is '0', then the program will branch.
The 2's complement number '2n' is added to the PC. Since the PC will have incremented to fetch the next instruction, the new address will be PC+2+2n. This instruction is then a two-cycle instruction.

Words: 1

Cycles: 1(2)

Q Cycle Activity:
If Jump:

Q1	Q2	Q3	Q4
Decode	Read literal 'n'	Process Data	Write to PC
No operation	No operation	No operation	No operation

If No Jump:

Q1	Q2	Q3	Q4
Decode	Read literal 'n'	Process Data	No operation

Example: `HERE BNZ Jump`

Before Instruction
PC = address (HERE)
After Instruction
If Zero = 0;
PC = address (Jump)
If Zero = 1;
PC = address (HERE+2)

© 2003 Microchip Technology Inc.

BRA **Unconditional Branch**

Syntax: [*label*] BRA n

Operands: -1024 ≤ n ≤ 1023

Operation: (PC) + 2 + 2n → PC

Status Affected: None

Encoding:

1101	0nnn	nnnn	nnnn

Description: Add the 2's complement number '2n' to the PC. Since the PC will have incremented to fetch the next instruction, the new address will be PC+2+2n. This instruction is a two-cycle instruction.

Words: 1

Cycles: 2

Q Cycle Activity:

Q1	Q2	Q3	Q4
Decode	Read literal 'n'	Process Data	Write to PC
No operation	No operation	No operation	No operation

Example: `HERE BRA Jump`

Before Instruction
PC = address `(HERE)`
After Instruction
PC = address `(Jump)`

BSF **Bit Set f**

Syntax: [*label*] BSF f,b[,a]

Operands: 0 ≤ f ≤ 255
0 ≤ b ≤ 7
a ∈ [0,1]

Operation: 1 → f<b>

Status Affected: None

Encoding:

1000	bbba	ffff	ffff

Description: Bit 'b' in register 'f' is set. If 'a' is 0, Access Bank will be selected, overriding the BSR value. If 'a' = `1`, then the bank will be selected as per the BSR value.

Words: 1

Cycles: 1

Q Cycle Activity:

Q1	Q2	Q3	Q4
Decode	Read register 'f'	Process Data	Write register 'f'

Example: `BSF FLAG_REG, 7`

Before Instruction
FLAG_REG = 0x0A
After Instruction
FLAG_REG = 0x8A

BTFSC **Bit Test File, Skip if Clear**

Syntax: [*label*] BTFSC f,b[,a]

Operands: $0 \le f \le 255$
$0 \le b \le 7$
$a \in [0,1]$

Operation: skip if (f<b>) = 0

Status Affected: None

Encoding:

1011	bbba	ffff	ffff

Description: If bit 'b' in register 'f' is 0, then the next instruction is skipped.
If bit 'b' is 0, then the next instruction fetched during the current instruction execution is discarded, and a NOP is executed instead, making this a two-cycle instruction. If 'a' is 0, the Access Bank will be selected, overriding the BSR value. If 'a' = 1, then the bank will be selected as per the BSR value (default).

Words: 1

Cycles: 1(2)
Note: 3 cycles if skip and followed by a 2-word instruction.

Q Cycle Activity:

Q1	Q2	Q3	Q4
Decode	Read register 'f'	Process Data	No operation

If skip:

Q1	Q2	Q3	Q4
No operation	No operation	No operation	No operation

If skip and followed by 2-word instruction:

Q1	Q2	Q3	Q4
No operation	No operation	No operation	No operation
No operation	No operation	No operation	No operation

Example:
```
HERE    BTFSC   FLAG, 1
FALSE   :
TRUE    :
```

Before Instruction
PC = address (HERE)

After Instruction
If FLAG<1> = 0;
PC = address (TRUE)
If FLAG<1> = 1;
PC = address (FALSE)

BTFSS **Bit Test File, Skip if Set**

Syntax: [*label*] BTFSS f,b[,a]

Operands: $0 \le f \le 255$
$0 \le b \le 7$
$a \in [0,1]$

Operation: skip if (f<b>) = 1

Status Affected: None

Encoding:

1010	bbba	ffff	ffff

Description: If bit 'b' in register 'f' is 1, then the next instruction is skipped.
If bit 'b' is 1, then the next instruction fetched during the current instruction execution, is discarded and a NOP is executed instead, making this a two-cycle instruction. If 'a' is 0, the Access Bank will be selected, overriding the BSR value. If 'a' = 1, then the bank will be selected as per the BSR value (default).

Words: 1

Cycles: 1(2)
Note: 3 cycles if skip and followed by a 2-word instruction.

Q Cycle Activity:

Q1	Q2	Q3	Q4
Decode	Read register 'f'	Process Data	No operation

If skip:

Q1	Q2	Q3	Q4
No operation	No operation	No operation	No operation

If skip and followed by 2-word instruction:

Q1	Q2	Q3	Q4
No operation	No operation	No operation	No operation
No operation	No operation	No operation	No operation

Example:
```
HERE    BTFSS   FLAG, 1
FALSE   :
TRUE    :
```

Before Instruction
PC = address (HERE)

After Instruction
If FLAG<1> = 0;
PC = address (FALSE)
If FLAG<1> = 1;
PC = address (TRUE)

© 2003 Microchip Technology Inc.

BTG **Bit Toggle f**

Syntax: [*label*] BTG f,b[,a]

Operands: $0 \le f \le 255$
$0 \le b \le 7$
$a \in [0,1]$

Operation: $(\overline{f<b>}) \rightarrow f<b>$

Status Affected: None

Encoding:

0111	bbba	ffff	ffff

Description: Bit 'b' in data memory location 'f' is inverted. If 'a' is 0, the Access Bank will be selected, overriding the BSR value. If 'a' = 1, then the bank will be selected as per the BSR value (default).

Words: 1

Cycles: 1

Q Cycle Activity:

Q1	Q2	Q3	Q4
Decode	Read register 'f'	Process Data	Write register 'f'

Example: `BTG PORTC, 4`

Before Instruction:
PORTC = 0111 0101 [0x75]
After Instruction:
PORTC = 0110 0101 [0x65]

BOV **Branch if Overflow**

Syntax: [*label*] BOV n

Operands: $-128 \le n \le 127$

Operation: if overflow bit is '1'
$(PC) + 2 + 2n \rightarrow PC$

Status Affected: None

Encoding:

1110	0100	nnnn	nnnn

Description: If the Overflow bit is '1', then the program will branch.
The 2's complement number '2n' is added to the PC. Since the PC will have incremented to fetch the next instruction, the new address will be PC+2+2n. This instruction is then a two-cycle instruction.

Words: 1

Cycles: 1(2)

Q Cycle Activity:
If Jump:

Q1	Q2	Q3	Q4
Decode	Read literal 'n'	Process Data	Write to PC
No operation	No operation	No operation	No operation

If No Jump:

Q1	Q2	Q3	Q4
Decode	Read literal 'n'	Process Data	No operation

Example:
```
HERE    BOV  JUMP
```
Before Instruction
PC = address (HERE)
After Instruction
If Overflow = 1;
PC = address (JUMP)
If Overflow = 0;
PC = address (HERE+2)

BZ **Branch if Zero**

Syntax: [*label*] BZ n

Operands: -128 ≤ n ≤ 127

Operation: if Zero bit is '1'
(PC) + 2 + 2n → PC

Status Affected: None

Encoding:

1110	0000	nnnn	nnnn

Description: If the Zero bit is '1', then the program will branch.
The 2's complement number '2n' is added to the PC. Since the PC will have incremented to fetch the next instruction, the new address will be PC+2+2n. This instruction is then a two-cycle instruction.

Words: 1

Cycles: 1(2)

Q Cycle Activity:
If Jump:

Q1	Q2	Q3	Q4
Decode	Read literal 'n'	Process Data	Write to PC
No operation	No operation	No operation	No operation

If No Jump:

Q1	Q2	Q3	Q4
Decode	Read literal 'n'	Process Data	No operation

Example: `HERE BZ Jump`

Before Instruction
PC = address (HERE)
After Instruction
If Zero = 1;
PC = address (Jump)
If Zero = 0;
PC = address (HERE+2)

CALL **Subroutine Call**

Syntax: [*label*] CALL k [,s]

Operands: 0 ≤ k ≤ 1048575
s ∈ [0,1]

Operation: (PC) + 4 → TOS,
k → PC<20:1>,
if s = 1
(W) → WS,
(STATUS) → STATUSS,
(BSR) → BSRS

Status Affected: None

Encoding:

1st word (k<7:0>)	1110	110s	$k_7$kkk	kkkk$_0$
2nd word(k<19:8>)	1111	k_{19}kkk	kkkk	kkkk$_8$

Description: Subroutine call of entire 2 Mbyte memory range. First, return address (PC+ 4) is pushed onto the return stack. If 's' = 1, the W, STATUS and BSR registers are also pushed into their respective shadow registers, WS, STATUSS and BSRS. If 's' = 0, no update occurs (default). Then, the 20-bit value 'k' is loaded into PC<20:1>. CALL is a two-cycle instruction.

Words: 2

Cycles: 2

Q Cycle Activity:

Q1	Q2	Q3	Q4
Decode	Read literal 'k'<7:0>,	Push PC to stack	Read literal 'k'<19:8>, Write to PC
No operation	No operation	No operation	No operation

Example: `HERE CALL THERE,FAST`

Before Instruction
PC = address (HERE)
After Instruction
PC = address (THERE)
TOS = address (HERE + 4)
WS = W
BSRS = BSR
STATUSS= STATUS

© 2003 Microchip Technology Inc.

CLRF **Clear f**

Syntax: [*label*] CLRF f [,a]

Operands: $0 \le f \le 255$
$a \in [0,1]$

Operation: 000h → f
1 → Z

Status Affected: Z

Encoding:

0110	101a	ffff	ffff

Description: Clears the contents of the specified register. If 'a' is 0, the Access Bank will be selected, overriding the BSR value. If 'a' = 1, then the bank will be selected as per the BSR value (default).

Words: 1

Cycles: 1

Q Cycle Activity:

Q1	Q2	Q3	Q4
Decode	Read register 'f'	Process Data	Write register 'f'

Example: CLRF FLAG_REG

Before Instruction
FLAG_REG = 0x5A
After Instruction
FLAG_REG = 0x00

CLRWDT **Clear Watchdog Timer**

Syntax: [*label*] CLRWDT

Operands: None

Operation: 000h → WDT,
000h → WDT postscaler,
1 → $\overline{TO}$,
1 → $\overline{PD}$

Status Affected: $\overline{TO}$, $\overline{PD}$

Encoding:

0000	0000	0000	0100

Description: CLRWDT instruction resets the Watchdog Timer. It also resets the postscaler of the WDT. Status bits $\overline{TO}$ and $\overline{PD}$ are set.

Words: 1

Cycles: 1

Q Cycle Activity:

Q1	Q2	Q3	Q4
Decode	No operation	Process Data	No operation

Example: CLRWDT

Before Instruction
WDT Counter = ?
After Instruction
WDT Counter = 0x00
WDT Postscaler = 0
$\overline{TO}$ = 1
$\overline{PD}$ = 1

COMF **Complement f**

Syntax: [*label*] COMF f [,d [,a]]

Operands: $0 \le f \le 255$
$d \in [0,1]$
$a \in [0,1]$

Operation: $(\overline{f}) \rightarrow$ dest

Status Affected: N, Z

Encoding:

0001	11da	ffff	ffff

Description: The contents of register 'f' are complemented. If 'd' is 0, the result is stored in W. If 'd' is 1, the result is stored back in register 'f' (default). If 'a' is 0, the Access Bank will be selected, overriding the BSR value. If 'a' = 1, then the bank will be selected as per the BSR value (default).

Words: 1

Cycles: 1

Q Cycle Activity:

Q1	Q2	Q3	Q4
Decode	Read register 'f'	Process Data	Write to destination

Example: COMF REG, W

Before Instruction
REG = 0x13
After Instruction
REG = 0x13
W = 0xEC

CPFSEQ **Compare f with W, skip if f = W**

Syntax: [*label*] CPFSEQ f [,a]

Operands: $0 \le f \le 255$
$a \in [0,1]$

Operation: (f) – (W),
skip if (f) = (W)
(unsigned comparison)

Status Affected: None

Encoding:

0110	001a	ffff	ffff

Description: Compares the contents of data memory location 'f' to the contents of W by performing an unsigned subtraction.
If 'f' = W, then the fetched instruction is discarded and a NOP is executed instead, making this a two-cycle instruction. If 'a' is 0, the Access Bank will be selected, overriding the BSR value. If 'a' = 1, then the bank will be selected as per the BSR value (default).

Words: 1

Cycles: 1(2)
Note: 3 cycles if skip and followed by a 2-word instruction.

Q Cycle Activity:

Q1	Q2	Q3	Q4
Decode	Read register 'f'	Process Data	No operation

If skip:

Q1	Q2	Q3	Q4
No operation	No operation	No operation	No operation

If skip and followed by 2-word instruction:

Q1	Q2	Q3	Q4
No operation	No operation	No operation	No operation
No operation	No operation	No operation	No operation

Example:
```
HERE    CPFSEQ REG
NEQUAL  :
EQUAL   :
```

Before Instruction
PC Address = HERE
W = ?
REG = ?
After Instruction
If REG = W;
PC = Address (EQUAL)
If REG ≠ W;
PC = Address (NEQUAL)

© 2003 Microchip Technology Inc.

CPFSGT **Compare f with W, skip if f > W**

Syntax: [*label*] CPFSGT f [,a]

Operands: $0 \le f \le 255$
$a \in [0,1]$

Operation: (f) – (W),
skip if (f) > (W)
(unsigned comparison)

Status Affected: None

Encoding:

0110	010a	ffff	ffff

Description: Compares the contents of data memory location 'f' to the contents of the W by performing an unsigned subtraction.
If the contents of 'f' are greater than the contents of WREG, then the fetched instruction is discarded and a NOP is executed instead, making this a two-cycle instruction. If 'a' is 0, the Access Bank will be selected, overriding the BSR value. If 'a' = 1, then the bank will be selected as per the BSR value (default).

Words: 1

Cycles: 1(2)
Note: 3 cycles if skip and followed by a 2-word instruction.

Q Cycle Activity:

Q1	Q2	Q3	Q4
Decode	Read register 'f'	Process Data	No operation

If skip:

Q1	Q2	Q3	Q4
No operation	No operation	No operation	No operation

If skip and followed by 2-word instruction:

Q1	Q2	Q3	Q4
No operation	No operation	No operation	No operation
No operation	No operation	No operation	No operation

Example:
```
HERE      CPFSGT REG
NGREATER  :
GREATER   :
```

Before Instruction
PC = Address (HERE)
W = ?

After Instruction
If REG > W;
PC = Address (GREATER)
If REG ≤ W;
PC = Address (NGREATER)

CPFSLT **Compare f with W, skip if f < W**

Syntax: [*label*] CPFSLT f [,a]

Operands: $0 \le f \le 255$
$a \in [0,1]$

Operation: (f) – (W),
skip if (f) < (W)
(unsigned comparison)

Status Affected: None

Encoding:

0110	000a	ffff	ffff

Description: Compares the contents of data memory location 'f' to the contents of W by performing an unsigned subtraction.
If the contents of 'f' are less than the contents of W, then the fetched instruction is discarded and a NOP is executed instead, making this a two-cycle instruction. If 'a' is 0, the Access Bank will be selected. If 'a' is 1, the BSR will not be overridden (default).

Words: 1

Cycles: 1(2)
Note: 3 cycles if skip and followed by a 2-word instruction.

Q Cycle Activity:

Q1	Q2	Q3	Q4
Decode	Read register 'f'	Process Data	No operation

If skip:

Q1	Q2	Q3	Q4
No operation	No operation	No operation	No operation

If skip and followed by 2-word instruction:

Q1	Q2	Q3	Q4
No operation	No operation	No operation	No operation
No operation	No operation	No operation	No operation

Example:
```
HERE    CPFSLT REG
NLESS   :
LESS    :
```

Before Instruction
PC = Address (HERE)
W = ?

After Instruction
If REG < W;
PC = Address (LESS)
If REG ≥ W;
PC = Address (NLESS)

DAW **Decimal Adjust W Register**

Syntax: [*label*] DAW

Operands: None

Operation: If [W<3:0> >9] or [DC = 1] then
(W<3:0>) + 6 → W<3:0>;
else
(W<3:0>) → W<3:0>;

If [W<7:4> >9] or [C = 1] then
(W<7:4>) + 6 → W<7:4>;
else
(W<7:4>) → W<7:4>;

Status Affected: C

Encoding:

0000	0000	0000	0111

Description: DAW adjusts the eight-bit value in W, resulting from the earlier addition of two variables (each in packed BCD format) and produces a correct packed BCD result.

Words: 1

Cycles: 1

Q Cycle Activity:

Q1	Q2	Q3	Q4
Decode	Read register W	Process Data	Write W

Example1: DAW

Before Instruction
W = 0xA5
C = 0
DC = 0

After Instruction
W = 0x05
C = 1
DC = 0

Example 2:

Before Instruction
W = 0xCE
C = 0
DC = 0

After Instruction
W = 0x34
C = 1
DC = 0

DECF **Decrement f**

Syntax: [*label*] DECF f [,d [,a]]

Operands: 0 ≤ f ≤ 255
d ∈ [0,1]
a ∈ [0,1]

Operation: (f) – 1 → dest

Status Affected: C, DC, N, OV, Z

Encoding:

0000	01da	ffff	ffff

Description: Decrement register 'f'. If 'd' is 0, the result is stored in W. If 'd' is 1, the result is stored back in register 'f' (default). If 'a' is 0, the Access Bank will be selected, overriding the BSR value. If 'a' = 1, then the bank will be selected as per the BSR value (default).

Words: 1

Cycles: 1

Q Cycle Activity:

Q1	Q2	Q3	Q4
Decode	Read register 'f'	Process Data	Write to destination

Example: DECF CNT,

Before Instruction
CNT = 0x01
Z = 0

After Instruction
CNT = 0x00
Z = 1

© 2003 Microchip Technology Inc.

DECFSZ **Decrement f, skip if 0**

Syntax: [*label*] DECFSZ f [,d [,a]]

Operands: $0 \le f \le 255$
$d \in [0,1]$
$a \in [0,1]$

Operation: (f) – 1 → dest,
skip if result = 0

Status Affected: None

Encoding:

0010	11da	ffff	ffff

Description: The contents of register 'f' are decremented. If 'd' is 0, the result is placed in W. If 'd' is 1, the result is placed back in register 'f' (default). If the result is 0, the next instruction, which is already fetched, is discarded, and a NOP is executed instead, making it a two-cycle instruction. If 'a' is 0, the Access Bank will be selected, overriding the BSR value. If 'a' = 1, then the bank will be selected as per the BSR value (default).

Words: 1

Cycles: 1(2)
Note: 3 cycles if skip and followed by a 2-word instruction.

Q Cycle Activity:

Q1	Q2	Q3	Q4
Decode	Read register 'f'	Process Data	Write to destination

If skip:

Q1	Q2	Q3	Q4
No operation	No operation	No operation	No operation

If skip and followed by 2-word instruction:

Q1	Q2	Q3	Q4
No operation	No operation	No operation	No operation
No operation	No operation	No operation	No operation

Example:
```
HERE    DECFSZ  CNT
        GOTO    LOOP
CONTINUE
```

Before Instruction
PC = Address (HERE)

After Instruction
CNT = CNT - 1
If CNT = 0;
PC = Address (CONTINUE)
If CNT ≠ 0;
PC = Address (HERE+2)

DCFSNZ **Decrement f, skip if not 0**

Syntax: [*label*] DCFSNZ f [,d [,a]]

Operands: $0 \le f \le 255$
$d \in [0,1]$
$a \in [0,1]$

Operation: (f) – 1 → dest,
skip if result ≠ 0

Status Affected: None

Encoding:

0100	11da	ffff	ffff

Description: The contents of register 'f' are decremented. If 'd' is 0, the result is placed in W. If 'd' is 1, the result is placed back in register 'f' (default). If the result is not 0, the next instruction, which is already fetched, is discarded, and a NOP is executed instead, making it a two-cycle instruction. If 'a' is 0, the Access Bank will be selected, overriding the BSR value. If 'a' = 1, then the bank will be selected as per the BSR value (default).

Words: 1

Cycles: 1(2)
Note: 3 cycles if skip and followed by a 2-word instruction.

Q Cycle Activity:

Q1	Q2	Q3	Q4
Decode	Read register 'f'	Process Data	Write to destination

If skip:

Q1	Q2	Q3	Q4
No operation	No operation	No operation	No operation

If skip and followed by 2-word instruction:

Q1	Q2	Q3	Q4
No operation	No operation	No operation	No operation
No operation	No operation	No operation	No operation

Example:
```
HERE    DCFSNZ  TEMP
ZERO    :
NZERO   :
```

Before Instruction
TEMP = ?

After Instruction
TEMP = TEMP - 1,
If TEMP = 0;
PC = Address (ZERO)
If TEMP ≠ 0;
PC = Address (NZERO)

GOTO **Unconditional Branch**

Syntax: [*label*] GOTO k

Operands: $0 \le k \le 1048575$

Operation: $k \rightarrow PC<20:1>$

Status Affected: None

Encoding:

1st word (k<7:0>)	1110	1111	k_7kkk	$kkkk_0$
2nd word(k<19:8>)	1111	$k_{19}kkk$	kkkk	$kkkk_8$

Description: GOTO allows an unconditional branch anywhere within entire 2 Mbyte memory range. The 20-bit value 'k' is loaded into PC<20:1>. GOTO is always a two-cycle instruction.

Words: 2

Cycles: 2

Q Cycle Activity:

Q1	Q2	Q3	Q4
Decode	Read literal 'k'<7:0>,	No operation	Read literal 'k'<19:8>, Write to PC
No operation	No operation	No operation	No operation

Example: GOTO THERE

After Instruction
PC = Address (THERE)

INCF **Increment f**

Syntax: [*label*] INCF f [,d [,a]]

Operands: $0 \le f \le 255$
$d \in [0,1]$
$a \in [0,1]$

Operation: (f) + 1 → dest

Status Affected: C, DC, N, OV, Z

Encoding:

0010	10da	ffff	ffff

Description: The contents of register 'f' are incremented. If 'd' is 0, the result is placed in W. If 'd' is 1, the result is placed back in register 'f' (default). If 'a' is 0, the Access Bank will be selected, overriding the BSR value. If 'a' = 1, then the bank will be selected as per the BSR value (default).

Words: 1

Cycles: 1

Q Cycle Activity:

Q1	Q2	Q3	Q4
Decode	Read register 'f'	Process Data	Write to destination

Example: INCF CNT,

Before Instruction
CNT = 0xFF
Z = 0
C = ?
DC = ?

After Instruction
CNT = 0x00
Z = 1
C = 1
DC = 1

© 2003 Microchip Technology Inc.

INCFSZ **Increment f, skip if 0**

Syntax: [*label*] INCFSZ f [,d [,a]]

Operands: $0 \le f \le 255$
$d \in [0,1]$
$a \in [0,1]$

Operation: (f) + 1 → dest,
skip if result = 0

Status Affected: None

Encoding:

0011	11da	ffff	ffff

Description: The contents of register 'f' are incremented. If 'd' is 0, the result is placed in W. If 'd' is 1, the result is placed back in register 'f' (default). If the result is 0, the next instruction, which is already fetched, is discarded, and a NOP is executed instead, making it a two-cycle instruction. If 'a' is 0, the Access Bank will be selected, overriding the BSR value. If 'a' = 1, then the bank will be selected as per the BSR value (default).

Words: 1

Cycles: 1(2)
Note: 3 cycles if skip and followed by a 2-word instruction.

Q Cycle Activity:

Q1	Q2	Q3	Q4
Decode	Read register 'f'	Process Data	Write to destination

If skip:

Q1	Q2	Q3	Q4
No operation	No operation	No operation	No operation

If skip and followed by 2-word instruction:

Q1	Q2	Q3	Q4
No operation	No operation	No operation	No operation
No operation	No operation	No operation	No operation

Example:
```
HERE    INCFSZ   CNT
NZERO   :
ZERO    :
```

Before Instruction
PC = Address (HERE)

After Instruction
CNT = CNT + 1
If CNT = 0;
PC = Address (ZERO)
If CNT ≠ 0;
PC = Address (NZERO)

INFSNZ **Increment f, skip if not 0**

Syntax: [*label*] INFSNZ f [,d [,a]]

Operands: $0 \le f \le 255$
$d \in [0,1]$
$a \in [0,1]$

Operation: (f) + 1 → dest,
skip if result ≠ 0

Status Affected: None

Encoding:

0100	10da	ffff	ffff

Description: The contents of register 'f' are incremented. If 'd' is 0, the result is placed in W. If 'd' is 1, the result is placed back in register 'f' (default). If the result is not 0, the next instruction, which is already fetched, is discarded, and a NOP is executed instead, making it a two-cycle instruction. If 'a' is 0, the Access Bank will be selected, overriding the BSR value. If 'a' = 1, then the bank will be selected as per the BSR value (default).

Words: 1

Cycles: 1(2)
Note: 3 cycles if skip and followed by a 2-word instruction.

Q Cycle Activity:

Q1	Q2	Q3	Q4
Decode	Read register 'f'	Process Data	Write to destination

If skip:

Q1	Q2	Q3	Q4
No operation	No operation	No operation	No operation

If skip and followed by 2-word instruction:

Q1	Q2	Q3	Q4
No operation	No operation	No operation	No operation
No operation	No operation	No operation	No operation

Example:
```
HERE    INFSNZ  REG
ZERO
NZERO
```

Before Instruction
PC = Address (HERE)

After Instruction
REG = REG + 1
If REG ≠ 0;
PC = Address (NZERO)
If REG = 0;
PC = Address (ZERO)

© 2003 Microchip Technology Inc.

IORLW **Inclusive OR literal with W**

Syntax: [*label*] IORLW k

Operands: $0 \le k \le 255$

Operation: (W) .OR. k → W

Status Affected: N, Z

Encoding:

0000	1001	kkkk	kkkk

Description: The contents of W are OR'ed with the eight-bit literal 'k'. The result is placed in W.

Words: 1

Cycles: 1

Q Cycle Activity:

Q1	Q2	Q3	Q4
Decode	Read literal 'k'	Process Data	Write to W

Example: `IORLW 0x35`

Before Instruction
W = 0x9A

After Instruction
W = 0xBF

IORWF **Inclusive OR W with f**

Syntax: [*label*] IORWF f [,d [,a]]

Operands: $0 \le f \le 255$
$d \in [0,1]$
$a \in [0,1]$

Operation: (W) .OR. (f) → dest

Status Affected: N, Z

Encoding:

0001	00da	ffff	ffff

Description: Inclusive OR W with register 'f'. If 'd' is 0, the result is placed in W. If 'd' is 1, the result is placed back in register 'f' (default). If 'a' is 0, the Access Bank will be selected, overriding the BSR value. If 'a' = 1, then the bank will be selected as per the BSR value (default).

Words: 1

Cycles: 1

Q Cycle Activity:

Q1	Q2	Q3	Q4
Decode	Read register 'f'	Process Data	Write to destination

Example: `IORWF RESULT, W`

Before Instruction
RESULT = 0x13
W = 0x91

After Instruction
RESULT = 0x13
W = 0x93

© 2003 Microchip Technology Inc.

LFSR **Load FSR**

Syntax: [*label*] LFSR f,k

Operands: $0 \le f \le 2$
$0 \le k \le 4095$

Operation: $k \rightarrow FSRf$

Status Affected: None

Encoding:

1110 1111	1110 0000	00ff $k_7$kkk	k_{11}kkk kkkk

Description: The 12-bit literal 'k' is loaded into the file select register pointed to by 'f'.

Words: 2

Cycles: 2

Q Cycle Activity:

Q1	Q2	Q3	Q4
Decode	Read literal 'k' MSB	Process Data	Write literal 'k' MSB to FSRfH
Decode	Read literal 'k' LSB	Process Data	Write literal 'k' to FSRfL

Example: `LFSR 2, 0x3AB`

After Instruction
FSR2H = 0x03
FSR2L = 0xAB

MOVF **Move f**

Syntax: [*label*] MOVF f [,d [,a]]

Operands: $0 \le f \le 255$
$d \in [0,1]$
$a \in [0,1]$

Operation: $f \rightarrow dest$

Status Affected: N, Z

Encoding:

0101	00da	ffff	ffff

Description: The contents of register 'f' are moved to a destination dependent upon the status of 'd'. If 'd' is 0, the result is placed in W. If 'd' is 1, the result is placed back in register 'f' (default). Location 'f' can be anywhere in the 256 byte bank. If 'a' is 0, the Access Bank will be selected, overriding the BSR value. If 'a' = 1, then the bank will be selected as per the BSR value (default).

Words: 1

Cycles: 1

Q Cycle Activity:

Q1	Q2	Q3	Q4
Decode	Read register 'f'	Process Data	Write W

Example: `MOVF REG, W`

Before Instruction
REG = 0x22
W = 0xFF

After Instruction
REG = 0x22
W = 0x22

MOVFF **Move f to f**

Syntax: [*label*] MOVFF f_s,f_d

Operands: $0 \le f_s \le 4095$
$0 \le f_d \le 4095$

Operation: $(f_s) \rightarrow f_d$

Status Affected: None

Encoding:

1st word (source)	1100	ffff	ffff	$ffff_s$
2nd word (destin.)	1111	ffff	ffff	$ffff_d$

Description: The contents of source register 'f_s' are moved to destination register 'f_d'. Location of source 'f_s' can be anywhere in the 4096 byte data space (000h to FFFh), and location of destination 'f_d' can also be anywhere from 000h to FFFh.
Either source or destination can be W (a useful special situation).
MOVFF is particularly useful for transferring a data memory location to a peripheral register (such as the transmit buffer or an I/O port).

The MOVFF instruction cannot use the PCL, TOSU, TOSH or TOSL as the destination register.

The MOVFF instruction should not be used to modify interrupt settings while any interrupt is enabled (see page 77).

Words: 2

Cycles: 2 (3)

Q Cycle Activity:

Q1	Q2	Q3	Q4
Decode	Read register 'f' (src)	Process Data	No operation
Decode	No operation No dummy read	No operation	Write register 'f' (dest)

Example: MOVFF REG1, REG2

Before Instruction
REG1 = 0x33
REG2 = 0x11

After Instruction
REG1 = 0x33,
REG2 = 0x33

MOVLB **Move literal to low nibble in BSR**

Syntax: [*label*] MOVLB k

Operands: $0 \le k \le 255$

Operation: $k \rightarrow BSR$

Status Affected: None

Encoding:

0000	0001	kkkk	kkkk

Description: The 8-bit literal 'k' is loaded into the Bank Select Register (BSR).

Words: 1

Cycles: 1

Q Cycle Activity:

Q1	Q2	Q3	Q4
Decode	Read literal 'k'	Process Data	Write literal 'k' to BSR

Example: MOVLB 5

Before Instruction
BSR register = 0x02

After Instruction
BSR register = 0x05

© 2003 Microchip Technology Inc.

MOVLW **Move literal to W**

Syntax: [*label*] MOVLW k

Operands: $0 \le k \le 255$

Operation: $k \rightarrow W$

Status Affected: None

Encoding:

0000	1110	kkkk	kkkk

Description: The eight-bit literal 'k' is loaded into W.

Words: 1

Cycles: 1

Q Cycle Activity:

Q1	Q2	Q3	Q4
Decode	Read literal 'k'	Process Data	Write to W

Example: `MOVLW 0x5A`

After Instruction

W = 0x5A

MOVWF **Move W to f**

Syntax: [*label*] MOVWF f [,a]

Operands: $0 \le f \le 255$
$a \in [0,1]$

Operation: $(W) \rightarrow f$

Status Affected: None

Encoding:

0110	111a	ffff	ffff

Description: Move data from W to register 'f'. Location 'f' can be anywhere in the 256 byte bank. If 'a' is 0, the Access Bank will be selected, overriding the BSR value. If 'a' = 1, then the bank will be selected as per the BSR value (default).

Words: 1

Cycles: 1

Q Cycle Activity:

Q1	Q2	Q3	Q4
Decode	Read register 'f'	Process Data	Write register 'f'

Example: `MOVWF REG`

Before Instruction

W = 0x4F
REG = 0xFF

After Instruction

W = 0x4F
REG = 0x4F

© 2003 Microchip Technology Inc.

MULLW **Multiply Literal with W**

Syntax: [*label*] MULLW k

Operands: $0 \le k \le 255$

Operation: (W) x k → PRODH:PRODL

Status Affected: None

Encoding:

0000	1101	kkkk	kkkk

Description: An unsigned multiplication is carried out between the contents of W and the 8-bit literal 'k'. The 16-bit result is placed in PRODH:PRODL register pair. PRODH contains the high byte. W is unchanged.
None of the status flags are affected.
Note that neither overflow nor carry is possible in this operation. A zero result is possible, but not detected.

Words: 1

Cycles: 1

Q Cycle Activity:

Q1	Q2	Q3	Q4
Decode	Read literal 'k'	Process Data	Write registers PRODH: PRODL

Example: `MULLW 0xC4`

Before Instruction
W = 0xE2
PRODH = ?
PRODL = ?

After Instruction
W = 0xE2
PRODH = 0xAD
PRODL = 0x08

MULWF **Multiply W with f**

Syntax: [*label*] MULWF f [,a]

Operands: $0 \le f \le 255$
$a \in [0,1]$

Operation: (W) x (f) → PRODH:PRODL

Status Affected: None

Encoding:

0000	001a	ffff	ffff

Description: An unsigned multiplication is carried out between the contents of W and the register file location 'f'. The 16-bit result is stored in the PRODH:PRODL register pair. PRODH contains the high byte. Both W and 'f' are unchanged.
None of the status flags are affected.
Note that neither overflow nor carry is possible in this operation. A zero result is possible, but not detected. If 'a' is 0, the Access Bank will be selected, overriding the BSR value. If 'a'= 1, then the bank will be selected as per the BSR value (default).

Words: 1

Cycles: 1

Q Cycle Activity:

Q1	Q2	Q3	Q4
Decode	Read register 'f'	Process Data	Write registers PRODH: PRODL

Example: `MULWF REG`

Before Instruction
W = 0xC4
REG = 0xB5
PRODH = ?
PRODL = ?

After Instruction
W = 0xC4
REG = 0xB5
PRODH = 0x8A
PRODL = 0x94

© 2003 Microchip Technology Inc.

NEGF **Negate f**

Syntax: [*label*] NEGF f [,a]

Operands: $0 \le f \le 255$
$a \in [0,1]$

Operation: $(\overline{f}) + 1 \rightarrow f$

Status Affected: N, OV, C, DC, Z

Encoding:

0110	110a	ffff	ffff

Description: Location 'f' is negated using two's complement. The result is placed in the data memory location 'f'. If 'a' is 0, the Access Bank will be selected, overriding the BSR value. If 'a' = 1, then the bank will be selected as per the BSR value.

Words: 1

Cycles: 1

Q Cycle Activity:

Q1	Q2	Q3	Q4
Decode	Read register 'f'	Process Data	Write register 'f'

Example:
```
NEGF    REG, 1
```
Before Instruction
REG = 0011 1010 [0x3A]
After Instruction
REG = 1100 0110 [0xC6]

NOP **No Operation**

Syntax: [*label*] NOP

Operands: None

Operation: No operation

Status Affected: None

Encoding:

0000 1111	0000 xxxx	0000 xxxx	0000 xxxx

Description: No operation.

Words: 1

Cycles: 1

Q Cycle Activity:

Q1	Q2	Q3	Q4
Decode	No operation	No operation	No operation

Example:

None.

POP **Pop Top of Return Stack**

Syntax: [*label*] POP

Operands: None

Operation: (TOS) → bit bucket

Status Affected: None

Encoding:

0000	0000	0000	0110

Description: The TOS value is pulled off the return stack and is discarded. The TOS value then becomes the previous value that was pushed onto the return stack.
This instruction is provided to enable the user to properly manage the return stack to incorporate a software stack.

Words: 1

Cycles: 1

Q Cycle Activity:

Q1	Q2	Q3	Q4
Decode	No operation	POP TOS value	No operation

Example:
```
POP
GOTO    NEW
```
Before Instruction
TOS = 0x0031A2
Stack (1 level down) = 0x014332

After Instruction
TOS = 0x014332
PC = NEW

PUSH **Push Top of Return Stack**

Syntax: [*label*] PUSH

Operands: None

Operation: (PC+2) → TOS

Status Affected: None

Encoding:

0000	0000	0000	0101

Description: The PC+2 is pushed onto the top of the return stack. The previous TOS value is pushed down on the stack. This instruction allows the user to implement a software stack by modifying TOS, and then push it onto the return stack.

Words: 1

Cycles: 1

Q Cycle Activity:

Q1	Q2	Q3	Q4
Decode	PUSH PC+2 onto return stack	No operation	No operation

Example:
```
PUSH
```
Before Instruction
TOS = 0x00345A
PC = 0x000124

After Instruction
PC = 0x000126
TOS = 0x000126
Stack (1 level down) = 0x00345A

© 2003 Microchip Technology Inc.

RCALL **Relative Call**

Syntax: [*label*] RCALL n

Operands: $-1024 \le n \le 1023$

Operation: $(PC) + 2 \rightarrow TOS$,
$(PC) + 2 + 2n \rightarrow PC$

Status Affected: None

Encoding:

1101	1nnn	nnnn	nnnn

Description: Subroutine call with a jump up to 1K from the current location. First, return address (PC+2) is pushed onto the stack. Then, add the 2's complement number '2n' to the PC. Since the PC will have incremented to fetch the next instruction, the new address will be PC+2+2n. This instruction is a two-cycle instruction.

Words: 1

Cycles: 2

Q Cycle Activity:

Q1	Q2	Q3	Q4
Decode	Read literal 'n' Push PC to stack	Process Data	Write to PC
No operation	No operation	No operation	No operation

Example: `HERE RCALL Jump`

Before Instruction
PC = Address `(HERE)`

After Instruction
PC = Address `(Jump)`
TOS = Address `(HERE+2)`

RESET **Reset**

Syntax: [*label*] RESET

Operands: None

Operation: Reset all registers and flags that are affected by a $\overline{MCLR}$ Reset.

Status Affected: All

Encoding:

0000	0000	1111	1111

Description: This instruction provides a way to execute a $\overline{MCLR}$ Reset in software.

Words: 1

Cycles: 1

Q Cycle Activity:

Q1	Q2	Q3	Q4
Decode	Start reset	No operation	No operation

Example: `RESET`

After Instruction
Registers = Reset Value
Flags* = Reset Value

RETFIE **Return from Interrupt**

Syntax: [*label*] RETFIE [s]

Operands: s ∈ [0,1]

Operation: (TOS) → PC,
1 → GIE/GIEH or PEIE/GIEL,
if s = 1
(WS) → W,
(STATUSS) → STATUS,
(BSRS) → BSR,
PCLATU, PCLATH are unchanged.

Status Affected: GIE/GIEH, PEIE/GIEL.

Encoding:

0000	0000	0001	000s

Description: Return from interrupt. Stack is popped and Top-of-Stack (TOS) is loaded into the PC. Interrupts are enabled by setting either the high or low priority global interrupt enable bit. If 's' = 1, the contents of the shadow registers WS, STATUSS and BSRS are loaded into their corresponding registers, W, STATUS and BSR. If 's' = 0, no update of these registers occurs (default).

Words: 1

Cycles: 2

Q Cycle Activity:

Q1	Q2	Q3	Q4
Decode	No operation	No operation	pop PC from stack Set GIEH or GIEL
No operation	No operation	No operation	No operation

Example: `RETFIE 1`

After Interrupt
PC = TOS
W = WS
BSR = BSRS
STATUS = STATUSS
GIE/GIEH, PEIE/GIEL = 1

RETLW **Return Literal to W**

Syntax: [*label*] RETLW k

Operands: 0 ≤ k ≤ 255

Operation: k → W,
(TOS) → PC,
PCLATU, PCLATH are unchanged

Status Affected: None

Encoding:

0000	1100	kkkk	kkkk

Description: W is loaded with the eight-bit literal 'k'. The program counter is loaded from the top of the stack (the return address). The high address latch (PCLATH) remains unchanged.

Words: 1

Cycles: 2

Q Cycle Activity:

Q1	Q2	Q3	Q4
Decode	Read literal 'k'	Process Data	pop PC from stack, Write to W
No operation	No operation	No operation	No operation

Example:

```
    CALL TABLE  ; W contains table
                ; offset value
                ; W now has
                ; table value
    :
TABLE
    ADDWF PCL   ; W = offset
    RETLW k0    ; Begin table
    RETLW k1    ;
    :
    :
    RETLW kn    ; End of table
```

Before Instruction
W = 0x07
After Instruction
W = value of kn

© 2003 Microchip Technology Inc.

RETURN **Return from Subroutine**

Syntax: [*label*] RETURN [s]

Operands: s ∈ [0,1]

Operation: (TOS) → PC,
if s = 1
(WS) → W,
(STATUSS) → STATUS,
(BSRS) → BSR,
PCLATU, PCLATH are unchanged

Status Affected: None

Encoding:

0000	0000	0001	001s

Description: Return from subroutine. The stack is popped and the top of the stack (TOS) is loaded into the program counter. If 's'= 1, the contents of the shadow registers WS, STATUSS and BSRS are loaded into their corresponding registers, W, STATUS and BSR. If 's' = 0, no update of these registers occurs (default).

Words: 1

Cycles: 2

Q Cycle Activity:

Q1	Q2	Q3	Q4
Decode	No operation	Process Data	pop PC from stack
No operation	No operation	No operation	No operation

Example: RETURN

After Interrupt
PC = TOS

RLCF **Rotate Left f through Carry**

Syntax: [*label*] RLCF f [,d [,a]]

Operands: 0 ≤ f ≤ 255
d ∈ [0,1]
a ∈ [0,1]

Operation: (f<n>) → dest<n+1>,
(f<7>) → C,
(C) → dest<0>

Status Affected: C, N, Z

Encoding:

0011	01da	ffff	ffff

Description: The contents of register 'f' are rotated one bit to the left through the Carry Flag. If 'd' is 0, the result is placed in W. If 'd' is 1, the result is stored back in register 'f' (default). If 'a' is 0, the Access Bank will be selected, overriding the BSR value. If 'a' = 1, then the bank will be selected as per the BSR value (default).

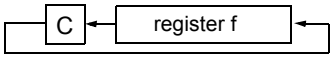

Words: 1

Cycles: 1

Q Cycle Activity:

Q1	Q2	Q3	Q4
Decode	Read register 'f'	Process Data	Write to destination

Example: RLCF REG, W

Before Instruction
REG = 1110 0110
C = 0

After Instruction
REG = 1110 0110
W = 1100 1100
C = 1

RLNCF **Rotate Left f (no carry)**

Syntax: [*label*] RLNCF f [,d [,a]]

Operands: $0 \le f \le 255$
$d \in [0,1]$
$a \in [0,1]$

Operation: (f<n>) → dest<n+1>,
(f<7>) → dest<0>

Status Affected: N, Z

Encoding:

0100	01da	ffff	ffff

Description: The contents of register 'f' are rotated one bit to the left. If 'd' is 0, the result is placed in W. If 'd' is 1, the result is stored back in register 'f' (default). If 'a' is 0, the Access Bank will be selected, overriding the BSR value. If 'a' is 1, then the bank will be selected as per the BSR value (default).

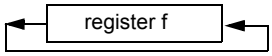

Words: 1

Cycles: 1

Q Cycle Activity:

Q1	Q2	Q3	Q4
Decode	Read register 'f'	Process Data	Write to destination

Example: RLNCF REG

Before Instruction
REG = 1010 1011

After Instruction
REG = 0101 0111

RRCF **Rotate Right f through Carry**

Syntax: [*label*] RRCF f [,d [,a]]

Operands: $0 \le f \le 255$
$d \in [0,1]$
$a \in [0,1]$

Operation: (f<n>) → dest<n-1>,
(f<0>) → C,
(C) → dest<7>

Status Affected: C, N, Z

Encoding:

0011	00da	ffff	ffff

Description: The contents of register 'f' are rotated one bit to the right through the Carry Flag. If 'd' is 0, the result is placed in W. If 'd' is 1, the result is placed back in register 'f' (default). If 'a' is 0, the Access Bank will be selected, overriding the BSR value. If 'a' is 1, then the bank will be selected as per the BSR value (default).

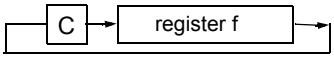

Words: 1

Cycles: 1

Q Cycle Activity:

Q1	Q2	Q3	Q4
Decode	Read register 'f'	Process Data	Write to destination

Example: RRCF REG, W

Before Instruction
REG = 1110 0110
C = 0

After Instruction
REG = 1110 0110
W = 0111 0011
C = 0

© 2003 Microchip Technology Inc.

RRNCF **Rotate Right f (no carry)**

Syntax: [*label*] RRNCF f [,d [,a]]

Operands: $0 \le f \le 255$
$d \in [0,1]$
$a \in [0,1]$

Operation: (f<n>) → dest<n-1>,
(f<0>) → dest<7>

Status Affected: N, Z

Encoding:

0100	00da	ffff	ffff

Description: The contents of register 'f' are rotated one bit to the right. If 'd' is 0, the result is placed in W. If 'd' is 1, the result is placed back in register 'f' (default). If 'a' is 0, the Access Bank will be selected, overriding the BSR value. If 'a' is 1, then the bank will be selected as per the BSR value (default).

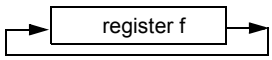

Words: 1

Cycles: 1

Q Cycle Activity:

Q1	Q2	Q3	Q4
Decode	Read register 'f'	Process Data	Write to destination

Example 1:
```
RRNCF   REG, 1, 0
```
Before Instruction
```
REG  =  1101 0111
```
After Instruction
```
REG  =  1110 1011
```

Example 2:
```
RRNCF   REG, W
```
Before Instruction
```
W    =  ?
REG  =  1101 0111
```
After Instruction
```
W    =  1110 1011
REG  =  1101 0111
```

SETF **Set f**

Syntax: [*label*] SETF f [,a]

Operands: $0 \le f \le 255$
$a \in [0,1]$

Operation: FFh → f

Status Affected: None

Encoding:

0110	100a	ffff	ffff

Description: The contents of the specified register are set to FFh. If 'a' is 0, the Access Bank will be selected, overriding the BSR value. If 'a' is 1, then the bank will be selected as per the BSR value (default).

Words: 1

Cycles: 1

Q Cycle Activity:

Q1	Q2	Q3	Q4
Decode	Read register 'f'	Process Data	Write register 'f'

Example:
```
SETF    REG
```
Before Instruction
```
REG  =  0x5A
```
After Instruction
```
REG  =  0xFF
```

SLEEP **Enter SLEEP mode**

Syntax: [*label*] SLEEP

Operands: None

Operation: 00h → WDT,
0 → WDT postscaler,
1 → $\overline{TO}$,
0 → $\overline{PD}$

Status Affected: $\overline{TO}$, $\overline{PD}$

Encoding:

0000	0000	0000	0011

Description: The power-down status bit ($\overline{PD}$) is cleared. The time-out status bit ($\overline{TO}$) is set. Watchdog Timer and its postscaler are cleared.
The processor is put into SLEEP mode with the oscillator stopped.

Words: 1

Cycles: 1

Q Cycle Activity:

Q1	Q2	Q3	Q4
Decode	No operation	Process Data	Go to sleep

Example: `SLEEP`

Before Instruction
$\overline{TO}$ = ?
$\overline{PD}$ = ?
After Instruction
$\overline{TO}$ = 1 †
$\overline{PD}$ = 0

† If WDT causes wake-up, this bit is cleared.

SUBFWB **Subtract f from W with borrow**

Syntax: [*label*] SUBFWB f [,d [,a]]

Operands: 0 ≤ f ≤ 255
d ∈ [0,1]
a ∈ [0,1]

Operation: (W) – (f) – ($\overline{C}$) → dest

Status Affected: N, OV, C, DC, Z

Encoding:

0101	01da	ffff	ffff

Description: Subtract register 'f' and carry flag (borrow) from W (2's complement method). If 'd' is 0, the result is stored in W. If 'd' is 1, the result is stored in register 'f' (default). If 'a' is 0, the Access Bank will be selected, overriding the BSR value. If 'a' is 1, then the bank will be selected as per the BSR value (default).

Words: 1

Cycles: 1

Q Cycle Activity:

Q1	Q2	Q3	Q4
Decode	Read register 'f'	Process Data	Write to destination

Example 1: `SUBFWB REG`

Before Instruction
REG = 0x03
W = 0x02
C = 0x01
After Instruction
REG = 0xFF
W = 0x02
C = 0x00
Z = 0x00
N = 0x01 ; result is negative

Example 2: `SUBFWB REG, 0, 0`

Before Instruction
REG = 2
W = 5
C = 1
After Instruction
REG = 2
W = 3
C = 1
Z = 0
N = 0 ; result is positive

Example 3: `SUBFWB REG, 1, 0`

Before Instruction
REG = 1
W = 2
C = 0
After Instruction
REG = 0
W = 2
C = 1
Z = 1 ; result is zero
N = 0

© 2003 Microchip Technology Inc.

SUBLW **Subtract W from literal**

Syntax: [*label*] SUBLW k

Operands: $0 \le k \le 255$

Operation: $k - (W) \rightarrow W$

Status Affected: N, OV, C, DC, Z

Encoding:

0000	1000	kkkk	kkkk

Description: W is subtracted from the eight-bit literal 'k'. The result is placed in W.

Words: 1

Cycles: 1

Q Cycle Activity:

Q1	Q2	Q3	Q4
Decode	Read literal 'k'	Process Data	Write to W

Example 1: `SUBLW 0x02`

Before Instruction
W = 1
C = ?

After Instruction
W = 1
C = 1 ; result is positive
Z = 0
N = 0

Example 2: `SUBLW 0x02`

Before Instruction
W = 2
C = ?

After Instruction
W = 0
C = 1 ; result is zero
Z = 1
N = 0

Example 3: `SUBLW 0x02`

Before Instruction
W = 3
C = ?

After Instruction
W = FF ; (2's complement)
C = 0 ; result is negative
Z = 0
N = 1

SUBWF **Subtract W from f**

Syntax: [*label*] SUBWF f [,d [,a]]

Operands: $0 \le f \le 255$
$d \in [0,1]$
$a \in [0,1]$

Operation: $(f) - (W) \rightarrow$ dest

Status Affected: N, OV, C, DC, Z

Encoding:

0101	11da	ffff	ffff

Description: Subtract W from register 'f' (2's complement method). If 'd' is 0, the result is stored in W. If 'd' is 1, the result is stored back in register 'f' (default). If 'a' is 0, the Access Bank will be selected, overriding the BSR value. If 'a' is 1, then the bank will be selected as per the BSR value (default).

Words: 1

Cycles: 1

Q Cycle Activity:

Q1	Q2	Q3	Q4
Decode	Read register 'f'	Process Data	Write to destination

Example 1: `SUBWF REG`

Before Instruction
REG = 3
W = 2
C = ?

After Instruction
REG = 1
W = 2
C = 1 ; result is positive
Z = 0
N = 0

Example 2: `SUBWF REG, W`

Before Instruction
REG = 2
W = 2
C = ?

After Instruction
REG = 2
W = 0
C = 1 ; result is zero
Z = 1
N = 0

Example 3: `SUBWF REG`

Before Instruction
REG = 0x01
W = 0x02
C = ?

After Instruction
REG = 0xFFh ;(2's complement)
W = 0x02
C = 0x00 ; result is negative
Z = 0x00
N = 0x01

© 2003 Microchip Technology Inc.

SUBWFB **Subtract W from f with Borrow**

Syntax: [*label*] SUBWFB f [,d [,a]]

Operands: $0 \le f \le 255$
$d \in [0,1]$
$a \in [0,1]$

Operation: (f) – (W) – ($\overline{C}$) → dest

Status Affected: N, OV, C, DC, Z

Encoding:

0101	10da	ffff	ffff

Description: Subtract W and the carry flag (borrow) from register 'f' (2's complement method). If 'd' is 0, the result is stored in W. If 'd' is 1, the result is stored back in register 'f' (default). If 'a' is 0, the Access Bank will be selected, overriding the BSR value. If 'a' is 1, then the bank will be selected as per the BSR value (default).

Words: 1

Cycles: 1

Q Cycle Activity:

Q1	Q2	Q3	Q4
Decode	Read register 'f'	Process Data	Write to destination

Example 1:
```
SUBWFB  REG, 1, 0
```
Before Instruction
```
REG  =  0x19   (0001 1001)
W    =  0x0D   (0000 1101)
C    =  0x01
```
After Instruction
```
REG  =  0x0C   (0000 1011)
W    =  0x0D   (0000 1101)
C    =  0x01
Z    =  0x00
N    =  0x00   ; result is positive
```

Example 2:
```
SUBWFB  REG, 0, 0
```
Before Instruction
```
REG  =  0x1B   (0001 1011)
W    =  0x1A   (0001 1010)
C    =  0x00
```
After Instruction
```
REG  =  0x1B   (0001 1011)
W    =  0x00
C    =  0x01
Z    =  0x01   ; result is zero
N    =  0x00
```

Example 3:
```
SUBWFB  REG, 1, 0
```
Before Instruction
```
REG  =  0x03   (0000 0011)
W    =  0x0E   (0000 1101)
C    =  0x01
```
After Instruction
```
REG  =  0xF5   (1111 0100)
                ; [2's comp]
W    =  0x0E   (0000 1101)
C    =  0x00
Z    =  0x00
N    =  0x01   ; result is negative
```

SWAPF **Swap f**

Syntax: [*label*] SWAPF f [,d [,a]]

Operands: $0 \le f \le 255$
$d \in [0,1]$
$a \in [0,1]$

Operation: (f<3:0>) → dest<7:4>,
(f<7:4>) → dest<3:0>

Status Affected: None

Encoding:

0011	10da	ffff	ffff

Description: The upper and lower nibbles of register 'f' are exchanged. If 'd' is 0, the result is placed in W. If 'd' is 1, the result is placed in register 'f' (default). If 'a' is 0, the Access Bank will be selected, overriding the BSR value. If 'a' is 1, then the bank will be selected as per the BSR value (default).

Words: 1

Cycles: 1

Q Cycle Activity:

Q1	Q2	Q3	Q4
Decode	Read register 'f'	Process Data	Write to destination

Example:
```
SWAPF   REG
```
Before Instruction
```
REG  =  0x53
```
After Instruction
```
REG  =  0x35
```


© 2003 Microchip Technology Inc.

TBLRD **Table Read**

Syntax: [*label*] TBLRD (*; *+; *-; +*)

Operands: None

Operation: if TBLRD *,
(Prog Mem (TBLPTR)) → TABLAT;
TBLPTR - No Change;
if TBLRD *+,
(Prog Mem (TBLPTR)) → TABLAT;
(TBLPTR) +1 → TBLPTR;
if TBLRD *-,
(Prog Mem (TBLPTR)) → TABLAT;
(TBLPTR) -1 → TBLPTR;
if TBLRD +*,
(TBLPTR) +1 → TBLPTR;
(Prog Mem (TBLPTR)) → TABLAT;

Status Affected: None

Encoding:

0000	0000	0000	10nn nn=0 * =1 *+ =2 *- =3 +*

Description: This instruction is used to read the contents of Program Memory (P.M.). To address the program memory, a pointer called Table Pointer (TBLPTR) is used. The TBLPTR (a 21-bit pointer) points to each byte in the program memory. TBLPTR has a 2-Mbyte address range.

TBLPTR[0] = 0: Least Significant Byte of Program Memory Word

TBLPTR[0] = 1: Most Significant Byte of Program Memory Word

The TBLRD instruction can modify the value of TBLPTR as follows:

- no change
- post-increment
- post-decrement
- pre-increment

Words: 1

Cycles: 2

Q Cycle Activity:

Q1	Q2	Q3	Q4
Decode	No operation	No operation	No operation
No operation	No operation (Read Program Memory)	No operation	No operation (Write TABLAT)

TBLRD **Table Read (cont'd)**

Example1:

```
TBLRD  *+ ;
```

Before Instruction
TABLAT = 0x55
TBLPTR = 0x00A356
MEMORY(0x00A356) = 0x34

After Instruction
TABLAT = 0x34
TBLPTR = 0x00A357

Example2:

```
TBLRD  +* ;
```

Before Instruction
TABLAT = 0xAA
TBLPTR = 0x01A357
MEMORY(0x01A357) = 0x12
MEMORY(0x01A358) = 0x34

After Instruction
TABLAT = 0x34
TBLPTR = 0x01A358

TBLWT Table Write

Syntax: [*label*] TBLWT (*; *+; *-; +*)

Operands: None

Operation: if TBLWT*,
(TABLAT) → Holding Register;
TBLPTR - No Change;
if TBLWT*+,
(TABLAT) → Holding Register;
(TBLPTR) +1 → TBLPTR;
if TBLWT*-,
(TABLAT) → Holding Register;
(TBLPTR) -1 → TBLPTR;
if TBLWT+*,
(TBLPTR) +1 → TBLPTR;
(TABLAT) → Holding Register;

Status Affected: None

Encoding:

0000	0000	0000	11nn nn=0 * =1 *+ =2 *- =3 +*

Description: This instruction uses the 3 LSBs of TBLPTR to determine which of the 8 holding registers the TABLAT is written to. The holding registers are used to program the contents of Program Memory (P.M.). (Refer to Section 6.0 for additional details on programming FLASH memory.)
The TBLPTR (a 21-bit pointer) points to each byte in the program memory. TBLPTR has a 2-MByte address range. The LSb of the TBLPTR selects which byte of the program memory location to access.

TBLPTR[0] = 0: Least Significant Byte of Program Memory Word

TBLPTR[0] = 1: Most Significant Byte of Program Memory Word

The TBLWT instruction can modify the value of TBLPTR as follows:

- no change
- post-increment
- post-decrement
- pre-increment

TBLWT Table Write (Continued)

Words: 1

Cycles: 2

Q Cycle Activity:

Q1	Q2	Q3	Q4
Decode	No operation	No operation	No operation
No operation	No operation (Read TABLAT)	No operation	No operation (Write to Holding Register)

Example1: TBLWT *+;

Before Instruction
TABLAT = 0x55
TBLPTR = 0x00A356
HOLDING REGISTER (0x00A356) = 0xFF

After Instructions (table write completion)
TABLAT = 0x55
TBLPTR = 0x00A357
HOLDING REGISTER (0x00A356) = 0x55

Example 2: TBLWT +*;

Before Instruction
TABLAT = 0x34
TBLPTR = 0x01389A
HOLDING REGISTER (0x01389A) = 0xFF
HOLDING REGISTER (0x01389B) = 0xFF

After Instruction (table write completion)
TABLAT = 0x34
TBLPTR = 0x01389B
HOLDING REGISTER (0x01389A) = 0xFF
HOLDING REGISTER (0x01389B) = 0x34

© 2003 Microchip Technology Inc.

TSTFSZ **Test f, skip if 0**

Syntax: [*label*] TSTFSZ f [,a]

Operands: $0 \le f \le 255$
$a \in [0,1]$

Operation: skip if f = 0

Status Affected: None

Encoding:

0110	011a	ffff	ffff

Description: If 'f' = 0, the next instruction, fetched during the current instruction execution is discarded and a NOP is executed, making this a two-cycle instruction. If 'a' is 0, the Access Bank will be selected, overriding the BSR value. If 'a' is 1, then the bank will be selected as per the BSR value (default).

Words: 1

Cycles: 1(2)
Note: 3 cycles if skip and followed by a 2-word instruction.

Q Cycle Activity:

Q1	Q2	Q3	Q4
Decode	Read register 'f'	Process Data	No operation

If skip:

Q1	Q2	Q3	Q4
No operation	No operation	No operation	No operation

If skip and followed by 2-word instruction:

Q1	Q2	Q3	Q4
No operation	No operation	No operation	No operation
No operation	No operation	No operation	No operation

Example:
```
HERE    TSTFSZ  CNT
NZERO     :
ZERO    :
```

Before Instruction
PC = Address (HERE)
After Instruction
If CNT = 0x00,
PC = Address (ZERO)
If CNT ≠ 0x00,
PC = Address (NZERO)

XORLW **Exclusive OR literal with W**

Syntax: [*label*] XORLW k

Operands: $0 \le k \le 255$

Operation: (W) .XOR. k → W

Status Affected: N, Z

Encoding:

0000	1010	kkkk	kkkk

Description: The contents of W are XORed with the 8-bit literal 'k'. The result is placed in W.

Words: 1

Cycles: 1

Q Cycle Activity:

Q1	Q2	Q3	Q4
Decode	Read literal 'k'	Process Data	Write to W

Example:
```
XORLW   0xAF
```

Before Instruction
W = 0xB5
After Instruction
W = 0x1A

XORWF	Exclusive OR W with f
Syntax:	[*label*] XORWF f [,d [,a]]
Operands:	$0 \le f \le 255$ $d \in [0,1]$ $a \in [0,1]$
Operation:	(W) .XOR. (f) $\rightarrow$ dest
Status Affected:	N, Z

Encoding:

0001	10da	ffff	ffff

Description: Exclusive OR the contents of W with register 'f'. If 'd' is 0, the result is stored in W. If 'd' is 1, the result is stored back in the register 'f' (default). If ‘a’ is 0, the Access Bank will be selected, overriding the BSR value. If ‘a’ is 1, then the bank will be selected as per the BSR value (default).

Words: 1

Cycles: 1

Q Cycle Activity:

Q1	Q2	Q3	Q4
Decode	Read register 'f'	Process Data	Write to destination

Example: `XORWF REG`

Before Instruction
- REG = 0xAF
- W = 0xB5

After Instruction
- REG = 0x1A
- W = 0xB5

© 2003 Microchip Technology Inc.

26.0 DEVELOPMENT SUPPORT

The PICmicro® microcontrollers are supported with a full range of hardware and software development tools:

- Integrated Development Environment
  - MPLAB® IDE Software
- Assemblers/Compilers/Linkers
  - MPASM™ Assembler
  - MPLAB C17 and MPLAB C18 C Compilers
  - MPLINK™ Object Linker/ MPLIB™ Object Librarian
  - MPLAB C30 C Compiler
  - MPLAB ASM30 Assembler/Linker/Library
- Simulators
  - MPLAB SIM Software Simulator
  - MPLAB dsPIC30 Software Simulator
- Emulators
  - MPLAB ICE 2000 In-Circuit Emulator
  - MPLAB ICE 4000 In-Circuit Emulator
- In-Circuit Debugger
  - MPLAB ICD 2
- Device Programmers
  - PRO MATE® II Universal Device Programmer
  - PICSTART® Plus Development Programmer
- Low Cost Demonstration Boards
  - PICDEM™ 1 Demonstration Board
  - PICDEM.net™ Demonstration Board
  - PICDEM 2 Plus Demonstration Board
  - PICDEM 3 Demonstration Board
  - PICDEM 17 Demonstration Board
  - PICDEM 18R Demonstration Board
  - PICDEM LIN Demonstration Board
  - PICDEM USB Demonstration Board
- Evaluation Kits
  - KEELOQ®
  - PICDEM MSC
  - microID®
  - CAN
  - PowerSmart®
  - Analog

26.1 MPLAB Integrated Development Environment Software

The MPLAB IDE software brings an ease of software development previously unseen in the 8/16-bit microcontroller market. The MPLAB IDE is a Windows® based application that contains:

- An interface to debugging tools
  - simulator
  - programmer (sold separately)
  - emulator (sold separately)
  - in-circuit debugger (sold separately)
- A full-featured editor with color coded context
- A multiple project manager
- Customizable data windows with direct edit of contents
- High level source code debugging
- Mouse over variable inspection
- Extensive on-line help

The MPLAB IDE allows you to:

- Edit your source files (either assembly or C)
- One touch assemble (or compile) and download to PICmicro emulator and simulator tools (automatically updates all project information)
- Debug using:
  - source files (assembly or C)
  - absolute listing file (mixed assembly and C)
  - machine code

MPLAB IDE supports multiple debugging tools in a single development paradigm, from the cost effective simulators, through low cost in-circuit debuggers, to full-featured emulators. This eliminates the learning curve when upgrading to tools with increasing flexibility and power.

26.2 MPASM Assembler

The MPASM assembler is a full-featured, universal macro assembler for all PICmicro MCUs.

The MPASM assembler generates relocatable object files for the MPLINK object linker, Intel® standard HEX files, MAP files to detail memory usage and symbol reference, absolute LST files that contains source lines and generated machine code and COFF files for debugging.

The MPASM assembler features include:

- Integration into MPLAB IDE projects
- User defined macros to streamline assembly code
- Conditional assembly for multi-purpose source files
- Directives that allow complete control over the assembly process

26.3 MPLAB C17 and MPLAB C18 C Compilers

The MPLAB C17 and MPLAB C18 Code Development Systems are complete ANSI C compilers for Microchip's PIC17CXXX and PIC18CXXX family of microcontrollers. These compilers provide powerful integration capabilities, superior code optimization and ease of use not found with other compilers.

For easy source level debugging, the compilers provide symbol information that is optimized to the MPLAB IDE debugger.

26.4 MPLINK Object Linker/ MPLIB Object Librarian

The MPLINK object linker combines relocatable objects created by the MPASM assembler and the MPLAB C17 and MPLAB C18 C compilers. It can link relocatable objects from pre-compiled libraries, using directives from a linker script.

The MPLIB object librarian manages the creation and modification of library files of pre-compiled code. When a routine from a library is called from a source file, only the modules that contain that routine will be linked in with the application. This allows large libraries to be used efficiently in many different applications.

The object linker/library features include:

- Efficient linking of single libraries instead of many smaller files
- Enhanced code maintainability by grouping related modules together
- Flexible creation of libraries with easy module listing, replacement, deletion and extraction

26.5 MPLAB C30 C Compiler

The MPLAB C30 C compiler is a full-featured, ANSI compliant, optimizing compiler that translates standard ANSI C programs into dsPIC30F assembly language source. The compiler also supports many command-line options and language extensions to take full advantage of the dsPIC30F device hardware capabilities, and afford fine control of the compiler code generator.

MPLAB C30 is distributed with a complete ANSI C standard library. All library functions have been validated and conform to the ANSI C library standard. The library includes functions for string manipulation, dynamic memory allocation, data conversion, time-keeping, and math functions (trigonometric, exponential and hyperbolic). The compiler provides symbolic information for high level source debugging with the MPLAB IDE.

26.6 MPLAB ASM30 Assembler, Linker, and Librarian

MPLAB ASM30 assembler produces relocatable machine code from symbolic assembly language for dsPIC30F devices. MPLAB C30 compiler uses the assembler to produce it's object file. The assembler generates relocatable object files that can then be archived or linked with other relocatable object files and archives to create an executable file. Notable features of the assembler include:

- Support for the entire dsPIC30F instruction set
- Support for fixed-point and floating-point data
- Command line interface
- Rich directive set
- Flexible macro language
- MPLAB IDE compatibility

26.7 MPLAB SIM Software Simulator

The MPLAB SIM software simulator allows code development in a PC hosted environment by simulating the PICmicro series microcontrollers on an instruction level. On any given instruction, the data areas can be examined or modified and stimuli can be applied from a file, or user defined key press, to any pin. The execution can be performed in Single-Step, Execute Until Break, or Trace mode.

The MPLAB SIM simulator fully supports symbolic debugging using the MPLAB C17 and MPLAB C18 C Compilers, as well as the MPASM assembler. The software simulator offers the flexibility to develop and debug code outside of the laboratory environment, making it an excellent, economical software development tool.

26.8 MPLAB SIM30 Software Simulator

The MPLAB SIM30 software simulator allows code development in a PC hosted environment by simulating the dsPIC30F series microcontrollers on an instruction level. On any given instruction, the data areas can be examined or modified and stimuli can be applied from a file, or user defined key press, to any of the pins.

The MPLAB SIM30 simulator fully supports symbolic debugging using the MPLAB C30 C Compiler and MPLAB ASM30 assembler. The simulator runs in either a Command Line mode for automated tasks, or from MPLAB IDE. This high speed simulator is designed to debug, analyze and optimize time intensive DSP routines.

© 2003 Microchip Technology Inc.

26.9 MPLAB ICE 2000 High Performance Universal In-Circuit Emulator

The MPLAB ICE 2000 universal in-circuit emulator is intended to provide the product development engineer with a complete microcontroller design tool set for PICmicro microcontrollers. Software control of the MPLAB ICE 2000 in-circuit emulator is advanced by the MPLAB Integrated Development Environment, which allows editing, building, downloading and source debugging from a single environment.

The MPLAB ICE 2000 is a full-featured emulator system with enhanced trace, trigger and data monitoring features. Interchangeable processor modules allow the system to be easily reconfigured for emulation of different processors. The universal architecture of the MPLAB ICE in-circuit emulator allows expansion to support new PICmicro microcontrollers.

The MPLAB ICE 2000 in-circuit emulator system has been designed as a real-time emulation system with advanced features that are typically found on more expensive development tools. The PC platform and Microsoft® Windows 32-bit operating system were chosen to best make these features available in a simple, unified application.

26.10 MPLAB ICE 4000 High Performance Universal In-Circuit Emulator

The MPLAB ICE 4000 universal in-circuit emulator is intended to provide the product development engineer with a complete microcontroller design tool set for high-end PICmicro microcontrollers. Software control of the MPLAB ICE in-circuit emulator is provided by the MPLAB Integrated Development Environment, which allows editing, building, downloading and source debugging from a single environment.

The MPLAB ICD 4000 is a premium emulator system, providing the features of MPLAB ICE 2000, but with increased emulation memory and high speed performance for dsPIC30F and PIC18XXXX devices. Its advanced emulator features include complex triggering and timing, up to 2 Mb of emulation memory, and the ability to view variables in real-time.

The MPLAB ICE 4000 in-circuit emulator system has been designed as a real-time emulation system with advanced features that are typically found on more expensive development tools. The PC platform and Microsoft Windows 32-bit operating system were chosen to best make these features available in a simple, unified application.

26.11 MPLAB ICD 2 In-Circuit Debugger

Microchip's In-Circuit Debugger, MPLAB ICD 2, is a powerful, low cost, run-time development tool, connecting to the host PC via an RS-232 or high speed USB interface. This tool is based on the FLASH PICmicro MCUs and can be used to develop for these and other PICmicro microcontrollers. The MPLAB ICD 2 utilizes the in-circuit debugging capability built into the FLASH devices. This feature, along with Microchip's In-Circuit Serial Programming™ (ICSP™) protocol, offers cost effective in-circuit FLASH debugging from the graphical user interface of the MPLAB Integrated Development Environment. This enables a designer to develop and debug source code by setting breakpoints, single-stepping and watching variables, CPU status and peripheral registers. Running at full speed enables testing hardware and applications in real-time. MPLAB ICD 2 also serves as a development programmer for selected PICmicro devices.

26.12 PRO MATE II Universal Device Programmer

The PRO MATE II is a universal, CE compliant device programmer with programmable voltage verification at V_{DDMIN} and V_{DDMAX} for maximum reliability. It features an LCD display for instructions and error messages and a modular detachable socket assembly to support various package types. In Stand-Alone mode, the PRO MATE II device programmer can read, verify, and program PICmicro devices without a PC connection. It can also set code protection in this mode.

26.13 PICSTART Plus Development Programmer

The PICSTART Plus development programmer is an easy-to-use, low cost, prototype programmer. It connects to the PC via a COM (RS-232) port. MPLAB Integrated Development Environment software makes using the programmer simple and efficient. The PICSTART Plus development programmer supports most PICmicro devices up to 40 pins. Larger pin count devices, such as the PIC16C92X and PIC17C76X, may be supported with an adapter socket. The PICSTART Plus development programmer is CE compliant.

26.14 PICDEM 1 PICmicro Demonstration Board

The PICDEM 1 demonstration board demonstrates the capabilities of the PIC16C5X (PIC16C54 to PIC16C58A), PIC16C61, PIC16C62X, PIC16C71, PIC16C8X, PIC17C42, PIC17C43 and PIC17C44. All necessary hardware and software is included to run basic demo programs. The sample microcontrollers provided with the PICDEM 1 demonstration board can be programmed with a PRO MATE II device programmer, or a PICSTART Plus development programmer. The PICDEM 1 demonstration board can be connected to the MPLAB ICE in-circuit emulator for testing. A prototype area extends the circuitry for additional application components. Features include an RS-232 interface, a potentiometer for simulated analog input, push button switches and eight LEDs.

26.15 PICDEM.net Internet/Ethernet Demonstration Board

The PICDEM.net demonstration board is an Internet/ Ethernet demonstration board using the PIC18F452 microcontroller and TCP/IP firmware. The board supports any 40-pin DIP device that conforms to the standard pinout used by the PIC16F877 or PIC18C452. This kit features a user friendly TCP/IP stack, web server with HTML, a 24L256 Serial EEPROM for Xmodem download to web pages into Serial EEPROM, ICSP/MPLAB ICD 2 interface connector, an Ethernet interface, RS-232 interface, and a 16 x 2 LCD display. Also included is the book and CD-ROM *"TCP/IP Lean, Web Servers for Embedded Systems,"* by Jeremy Bentham

26.16 PICDEM 2 Plus Demonstration Board

The PICDEM 2 Plus demonstration board supports many 18-, 28-, and 40-pin microcontrollers, including PIC16F87X and PIC18FXX2 devices. All the necessary hardware and software is included to run the demonstration programs. The sample microcontrollers provided with the PICDEM 2 demonstration board can be programmed with a PRO MATE II device programmer, PICSTART Plus development programmer, or MPLAB ICD 2 with a Universal Programmer Adapter. The MPLAB ICD 2 and MPLAB ICE in-circuit emulators may also be used with the PICDEM 2 demonstration board to test firmware. A prototype area extends the circuitry for additional application components. Some of the features include an RS-232 interface, a 2 x 16 LCD display, a piezo speaker, an on-board temperature sensor, four LEDs, and sample PIC18F452 and PIC16F877 FLASH microcontrollers.

26.17 PICDEM 3 PIC16C92X Demonstration Board

The PICDEM 3 demonstration board supports the PIC16C923 and PIC16C924 in the PLCC package. All the necessary hardware and software is included to run the demonstration programs.

26.18 PICDEM 17 Demonstration Board

The PICDEM 17 demonstration board is an evaluation board that demonstrates the capabilities of several Microchip microcontrollers, including PIC17C752, PIC17C756A, PIC17C762 and PIC17C766. A programmed sample is included. The PRO MATE II device programmer, or the PICSTART Plus development programmer, can be used to reprogram the device for user tailored application development. The PICDEM 17 demonstration board supports program download and execution from external on-board FLASH memory. A generous prototype area is available for user hardware expansion.

© 2003 Microchip Technology Inc.

26.19 PICDEM 18R PIC18C601/801 Demonstration Board

The PICDEM 18R demonstration board serves to assist development of the PIC18C601/801 family of Microchip microcontrollers. It provides hardware implementation of both 8-bit Multiplexed/De-multiplexed and 16-bit Memory modes. The board includes 2 Mb external FLASH memory and 128 Kb SRAM memory, as well as serial EEPROM, allowing access to the wide range of memory types supported by the PIC18C601/801.

26.20 PICDEM LIN PIC16C43X Demonstration Board

The powerful LIN hardware and software kit includes a series of boards and three PICmicro microcontrollers. The small footprint PIC16C432 and PIC16C433 are used as slaves in the LIN communication and feature on-board LIN transceivers. A PIC16F874 FLASH microcontroller serves as the master. All three microcontrollers are programmed with firmware to provide LIN bus communication.

26.21 PICDEM USB PIC16C7X5 Demonstration Board

The PICDEM USB Demonstration Board shows off the capabilities of the PIC16C745 and PIC16C765 USB microcontrollers. This board provides the basis for future USB products.

26.22 Evaluation and Programming Tools

In addition to the PICDEM series of circuits, Microchip has a line of evaluation kits and demonstration software for these products.

- KEELOQ evaluation and programming tools for Microchip's HCS Secure Data Products
- CAN developers kit for automotive network applications
- Analog design boards and filter design software
- PowerSmart battery charging evaluation/ calibration kits
- IrDA® development kit
- microID development and RFLab™ development software
- SEEVAL® designer kit for memory evaluation and endurance calculations
- PICDEM MSC demo boards for Switching mode power supply, high power IR driver, delta sigma ADC, and flow rate sensor

Check the Microchip web page and the latest Product Line Card for the complete list of demonstration and evaluation kits.

TABLE 26-1: DEVELOPMENT TOOLS FROM MICROCHIP

		PIC12CXXX	PIC12FXXX	PIC14000	PIC16C5X	PIC16C6X	PIC16CXXX	PIC16C43X	PIC16F62X	PIC16C7X	PIC16C7XX	PIC16C7X5	PIC16C8X	PIC16F8XX	PIC16C9XX	PIC17C4X	PIC17C7XX	PIC18CXX2	PIC18CX01	PIC18FXXX	dsPIC30F
Software Tools	MPLAB Integrated Development Environment	✓	✓	✓	✓	✓	✓	✓	✓	✓	✓	✓	✓	✓	✓	✓	✓	✓		✓	
	MPLAB C17 C Compiler															✓	✓				
	MPLAB C18 C Compiler																	✓		✓	
	MPASM Assembler/ MPLINK Object Linker	✓	✓	✓	✓	✓	✓	✓	✓	✓	✓	✓	✓	✓	✓	✓	✓	✓		✓	
	MPLAB C30 C Compiler																				✓
	MPLAB ASM30 Assembler/Linker/Librarian																				✓
Emulators	MPLAB ICE 2000 In-Circuit Emulator	✓	✓	✓	✓	✓	✓	✓	✓**	✓	✓		✓	✓	✓	✓	✓	✓		✓	
	MPLAB ICE 4000 In-Circuit Emulator	✓			✓	✓	✓			✓	✓		✓		✓	✓	✓	✓	✓		✓
Debugger	MPLAB ICD 2 In-Circuit Debugger		✓			✓*				✓*				✓							✓
Programmers	PICSTART Plus Entry Level Development Programmer	✓	✓	✓	✓	✓	✓	✓	✓**	✓	✓	✓	✓	✓	✓	✓	✓	✓		✓	
	PRO MATE II Universal Device Programmer	✓	✓	✓	✓	✓	✓	✓	✓**	✓	✓	✓	✓	✓	✓	✓	✓	✓		✓	
Demo Boards and Eval Kits	PICDEM 1 Demonstration Board				✓		✓			✓†			✓			✓					
	PICDEM.net Demonstration Board																	✓			
	PICDEM 2 Plus Demonstration Board					✓†				✓†								✓		✓	
	PICDEM 3 Demonstration Board														✓						
	PICDEM 14A Demonstration Board			✓																	
	PICDEM 17 Demonstration Board																✓				
	PICDEM 18R Demonstration Board																		✓		
	PICDEM LIN Demonstration Board							✓						✓							
	PICDEM USB Demonstration Board											✓		✓							

* Contact the Microchip web site at www.microchip.com for information on how to use the MPLAB ICD In-Circuit Debugger (DV164001) with PIC16C62, 63, 64, 65, 72, 73, 74, 76, 77.
** Contact Microchip Technology Inc. for availability date.
† Development tool is available on select devices.

© 2003 Microchip Technology Inc.

27.0 ELECTRICAL CHARACTERISTICS

Absolute Maximum Ratings(†)

Ambient temperature under bias ..... -55°C to +125°C
Storage temperature ..... -65°C to +150°C
Voltage on any pin with respect to V_{SS} (except V_{DD}, $\overline{MCLR}$, and RA4) ..... -0.3V to (V_{DD} + 0.3V)
Voltage on V_{DD} with respect to V_{SS} ..... -0.3V to +7.5V
Voltage on $\overline{MCLR}$ with respect to V_{SS} **(Note 2)** ..... 0V to +13.25V
Voltage on RA4 with respect to Vss ..... 0V to +8.5V
Total power dissipation **(Note 1)** 1.0W
Maximum current out of V_{SS} pin ..... 300 mA
Maximum current into V_{DD} pin ..... 250 mA
Input clamp current, I_{IK} (V_I < 0 or V_I > V_{DD}) ..... ±20 mA
Output clamp current, I_{OK} (V_O < 0 or V_O > V_{DD}) ..... ±20 mA
Maximum output current sunk by any I/O pin ..... 25 mA
Maximum output current sourced by any I/O pin ..... 25 mA
Maximum current sunk by all ports (combined) ..... 200 mA
Maximum current sourced by all ports (combined) ..... 200 mA

Note 1: Power dissipation is calculated as follows:
$P_{dis} = V_{DD} \times \{I_{DD} - \sum I_{OH}\} + \sum \{(V_{DD}-V_{OH}) \times I_{OH}\} + \sum(V_{OI} \times I_{OL})$

2: Voltage spikes below V_{SS} at the $\overline{MCLR}/V_{PP}$ pin, inducing currents greater than 80 mA, may cause latchup. Thus, a series resistor of 50-100Ω should be used when applying a "low" level to the $\overline{MCLR}/V_{PP}$ pin, rather than pulling this pin directly to V_{SS}.

Note:	Stresses above those listed under "Absolute Maximum Ratings" may cause permanent damage to the device. This is a stress rating only and functional operation of the device at those or any other conditions above those indicated in the operation listings of this specification is not implied. Exposure to maximum rating conditions for extended periods may affect device reliability.

FIGURE 27-1: PIC18FXX8 VOLTAGE-FREQUENCY GRAPH (INDUSTRIAL)

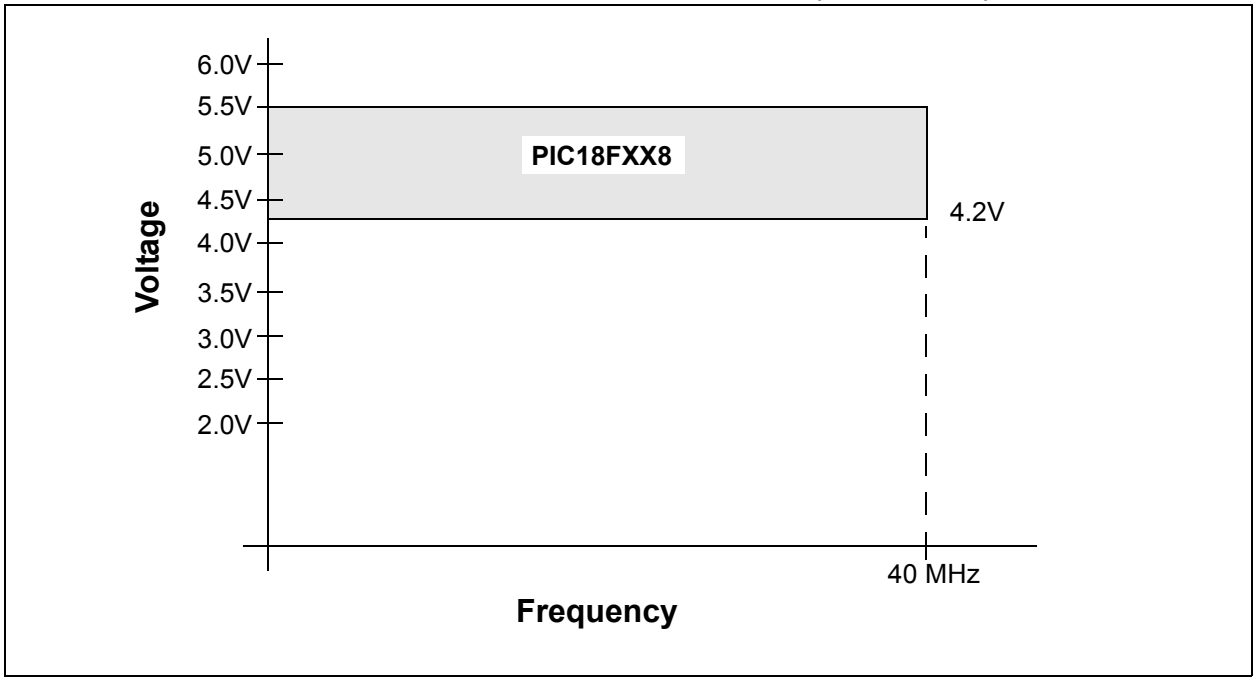

FIGURE 27-2: PIC18FXX8 VOLTAGE-FREQUENCY GRAPH (EXTENDED)

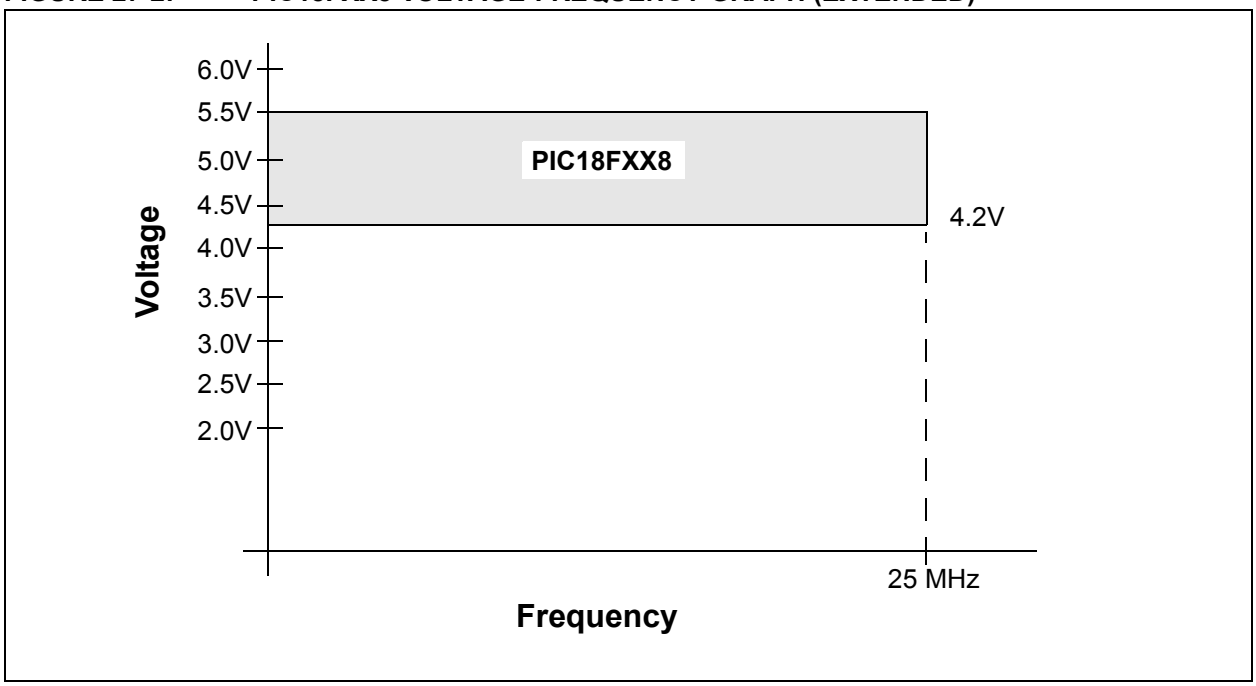

© 2003 Microchip Technology Inc.

FIGURE 27-3: PIC18LFXX8 VOLTAGE-FREQUENCY GRAPH (INDUSTRIAL)

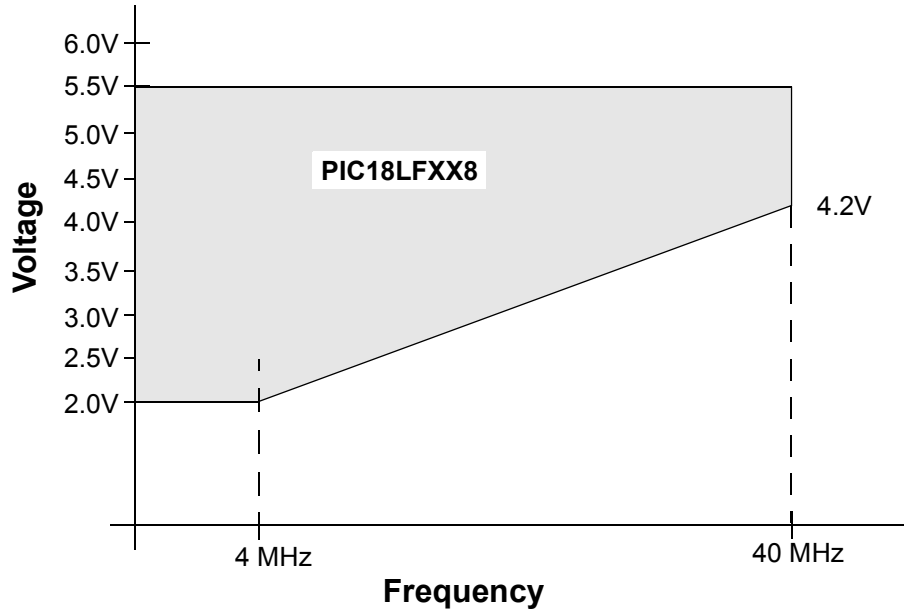

FMAX = (16.36 MHz/V) (VDDAPPMIN – 2.0V) + 4 MHz, if VDDAPPMIN ≤ 4.2V = 40 MHz, if VDDAPPMIN > 4.2V

Note: VDDAPPMIN is the minimum voltage of the PICmicro® device in the application.

27.1 DC Characteristics

PIC18LFXX8 (Industrial)			Standard Operating Conditions (unless otherwise stated) Operating temperature -40°C ≤ TA ≤ +85°C for industrial				
PIC18FXX8 (Industrial, Extended)			**Standard Operating Conditions (unless otherwise stated)** Operating temperature -40°C ≤ TA ≤ +85°C for industrial -40°C ≤ TA ≤ +125°C for extended				
Param No.	**Symbol**	**Characteristic/ Device**	**Min**	**Typ**	**Max**	**Units**	**Conditions**
	VDD	**Supply Voltage**					
D001		PIC18LFXX8	2.0	—	5.5	V	HS, XT, RC and LP Osc mode
D001		PIC18FXX8	4.2	—	5.5	V	
D002	VDR	**RAM Data Retention Voltage(1)**	1.5	—	—	V	
D003	VPOR	**VDD Start Voltage** to ensure internal Power-on Reset signal	—	—	0.7	V	See section on Power-on Reset for details
D004	SVDD	**VDD Rise Rate** to ensure internal Power-on Reset signal	0.05	—	—	V/ms	See section on Power-on Reset for details
	VBOR	**Brown-out Reset Voltage**					
D005		PIC18LFXX8					
		BORV1:BORV0 = 11	1.98	—	2.14	V	
		BORV1:BORV0 = 10	2.67	—	2.89	V	
		BORV1:BORV0 = 01	4.16	—	4.5	V	
		BORV1:BORV0 = 00	4.45	—	4.83	V	
D005		PIC18FXX8					
		BORV1:BORV0 = 1x	N.A.	—	N.A.	V	Not in operating voltage range of device
		BORV1:BORV0 = 01	4.16	—	4.5	V	
		BORV1:BORV0 = 00	4.45	—	4.83	V	

Legend: Rows are shaded for improved readability.

Note 1: This is the limit to which VDD can be lowered in SLEEP mode or during a device RESET, without losing RAM data.

2: The supply current is mainly a function of the operating voltage and frequency. Other factors, such as I/O pin loading and switching rate, oscillator type, internal code execution pattern, and temperature, also have an impact on the current consumption.
The test conditions for all IDD measurements in active Operation mode are:
OSC1 = external square wave, from rail-to-rail; all I/O pins tri-stated, pulled to VDD
$\overline{MCLR}$ = VDD; WDT enabled/disabled as specified.

3: The power-down current in SLEEP mode does not depend on the oscillator type. Power-down current is measured with the part in SLEEP mode, with all I/O pins in hi-impedance state and tied to VDD and VSS, and all features that add delta current disabled (such as WDT, Timer1 Oscillator, BOR, ...).

4: For RC osc configuration, current through REXT is not included. The current through the resistor can be estimated by the formula Ir = VDD/2 REXT (mA) with REXT in kOhm.

5: The LVD and BOR modules share a large portion of circuitry. The ΔIBOR and ΔILVD currents are not additive. Once one of these modules is enabled, the other may also be enabled without further penalty.

© 2003 Microchip Technology Inc.

27.1 DC Characteristics (Continued)

PIC18LFXX8 (Industrial)			Standard Operating Conditions (unless otherwise stated) Operating temperature -40°C ≤ TA ≤ +85°C for industrial				
PIC18FXX8 (Industrial, Extended)			**Standard Operating Conditions (unless otherwise stated)** Operating temperature -40°C ≤ TA ≤ +85°C for industrial -40°C ≤ TA ≤ +125°C for extended				
Param No.	**Symbol**	**Characteristic/ Device**	**Min**	**Typ**	**Max**	**Units**	**Conditions**
	IDD	**Supply Current(2,3,4)**					
D010		PIC18LFXX8					XT osc configuration
			—	.4	1.5	mA	VDD = 2.0V, +25°C, FOSC = 4 MHz
			—	.4	1.5	mA	VDD = 2.0V, -40°C to +85°C, FOSC = 4 MHz
			—	1.5	3	mA	VDD = 4.2V, -40°C to +85°C, FOSC = 4 MHz
							RC osc configuration
			—	.4	1.5	mA	VDD = 2.0V, +25°C, FOSC = 4 MHz
			—	.4	2.5	mA	VDD = 2.0V, -40°C to +85°C, FOSC = 4 MHz
			—	2.5	5	mA	VDD = 4.2V, -40°C to +85°C, FOSC = 4 MHz
							RCIO osc configuration
			—	.4	1.5	mA	VDD = 2.0V, +25°C, FOSC = 4 MHz
			—	.4	1.2	mA	VDD = 2.0V, -40°C to +85°C, FOSC = 4 MHz
			—	.4	4	mA	VDD = 4.2V, -40°C to +85°C, FOSC = 4 MHz
D010		PIC18FXX8					XT osc configuration
			—	1.5	2	mA	VDD = 4.2V, +25°C, FOSC = 4 MHz
			—	1.5	3	mA	VDD = 4.2V, -40°C to +85°C, FOSC = 4 MHz
			—	1.5	4	mA	VDD = 4.2V, -40°C to +125°C, FOSC = 4 MHz
							RC osc configuration
			—	2.5	3	mA	VDD = 4.2V, +25°C, FOSC = 4 MHz
			—	2.5	5	mA	VDD = 4.2V, -40°C to +85°C, FOSC = 4 MHz
			—	2.5	6	mA	VDD = 4.2V, -40°C to +125°C, FOSC = 4 MHz
							RCIO osc configuration
			—	1.5	3	mA	VDD = 4.2V, +25°C, FOSC = 4 MHz
			—	1.5	4	mA	VDD = 4.2V, -40°C to +85°C, FOSC = 4 MHz
			—	1.5	4	mA	VDD = 4.2V, -40°C to +125°C, FOSC = 4 MHz
D010A		PIC18LFXX8					LP osc, FOSC = 32 kHz, WDT disabled
			—	18	40	µA	VDD = 2.0V, -40°C to +85°C
D010A		PIC18FXX8					LP osc, FOSC = 32 kHz, WDT disabled
			—	60	150	µA	VDD = 4.2V, -40°C to +85°C
			—	60	180	µA	VDD = 4.2V, -40°C to +125°C

Legend: Rows are shaded for improved readability.

Note 1: This is the limit to which VDD can be lowered in SLEEP mode or during a device RESET, without losing RAM data.

2: The supply current is mainly a function of the operating voltage and frequency. Other factors, such as I/O pin loading and switching rate, oscillator type, internal code execution pattern, and temperature, also have an impact on the current consumption.
The test conditions for all IDD measurements in active Operation mode are:
OSC1 = external square wave, from rail-to-rail; all I/O pins tri-stated, pulled to VDD
$\overline{MCLR}$ = VDD; WDT enabled/disabled as specified.

3: The power-down current in SLEEP mode does not depend on the oscillator type. Power-down current is measured with the part in SLEEP mode, with all I/O pins in hi-impedance state and tied to VDD and VSS, and all features that add delta current disabled (such as WDT, Timer1 Oscillator, BOR, ...).

4: For RC osc configuration, current through REXT is not included. The current through the resistor can be estimated by the formula Ir = VDD/2 REXT (mA) with REXT in kOhm.

5: The LVD and BOR modules share a large portion of circuitry. The ΔIBOR and ΔILVD currents are not additive. Once one of these modules is enabled, the other may also be enabled without further penalty.

27.1 DC Characteristics (Continued)

PIC18LFXX8 (Industrial)			**Standard Operating Conditions (unless otherwise stated)** Operating temperature -40°C ≤ TA ≤ +85°C for industrial				
PIC18FXX8 (Industrial, Extended)			**Standard Operating Conditions (unless otherwise stated)** Operating temperature -40°C ≤ TA ≤ +85°C for industrial -40°C ≤ TA ≤ +125°C for extended				
Param No.	**Symbol**	**Characteristic/ Device**	**Min**	**Typ**	**Max**	**Units**	**Conditions**
	IDD	**Supply Current(2,3,4)**					
D010C		PIC18LFXX8	—	17	28	mA	EC, ECIO osc configurations VDD = 4.2V, -40°C to +85°C
D010C		PIC18FXX8	—	17	30	mA	EC, ECIO osc configurations VDD = 4.2V, -40°C to +125°C, FOSC = 25 MHz
D013		PIC18LFXX8	— — —	1.2 14 22	3 28 40	mA mA mA	HS osc configurations FOSC = 6 MHz, VDD = 2.0V FOSC = 25 MHz, VDD = 5.5V HS + PLL osc configuration FOSC = 10 MHz, VDD = 5.5V
D013		PIC18FXX8	— —	14 22	28 34	mA mA	HS osc configurations FOSC = 25 MHz, VDD = 5.5V HS + PLL osc configuration FOSC = 10 MHz, VDD = 5.5V
D014		PIC18LFXX8	—	32	55	µA	Timer1 osc configuration FOSC = 32 kHz, VDD = 2.0V
D014		PIC18FXX8	— —	62 62	250 310	µA µA	Timer1 osc configuration FOSC = 32 kHz, VDD = 4.2V, -40°C to +85°C FOSC = 32 kHz, VDD = 4.2V, -40°C to +125°C
	IPD	**Power-down Current(3)**					
D020		PIC18LFXX8	— —	0.1 2	4 10	µA µA	VDD = 2.0V, -40°C to +85°C VDD = 4.2V, -40°C to +85°C
D020		PIC18FXX8	—	2	10	µA	VDD = 4.2V, -40°C to +85°C
D021B			—	2	40	µA	VDD = 4.2V, -40°C to +125°C

Legend: Rows are shaded for improved readability.

Note 1: This is the limit to which VDD can be lowered in SLEEP mode or during a device RESET, without losing RAM data.

2: The supply current is mainly a function of the operating voltage and frequency. Other factors, such as I/O pin loading and switching rate, oscillator type, internal code execution pattern, and temperature, also have an impact on the current consumption.
The test conditions for all IDD measurements in active Operation mode are:
OSC1 = external square wave, from rail-to-rail; all I/O pins tri-stated, pulled to VDD
MCLR = VDD; WDT enabled/disabled as specified.

3: The power-down current in SLEEP mode does not depend on the oscillator type. Power-down current is measured with the part in SLEEP mode, with all I/O pins in hi-impedance state and tied to VDD and VSS, and all features that add delta current disabled (such as WDT, Timer1 Oscillator, BOR, ...).

4: For RC osc configuration, current through REXT is not included. The current through the resistor can be estimated by the formula Ir = VDD/2 REXT (mA) with REXT in kOhm.

5: The LVD and BOR modules share a large portion of circuitry. The ΔIBOR and ΔILVD currents are not additive. Once one of these modules is enabled, the other may also be enabled without further penalty.

© 2003 Microchip Technology Inc.

27.1 DC Characteristics (Continued)

PIC18LFXX8 (Industrial)			Standard Operating Conditions (unless otherwise stated) Operating temperature -40°C ≤ TA ≤ +85°C for industrial				
PIC18FXX8 (Industrial, Extended)			**Standard Operating Conditions (unless otherwise stated)** Operating temperature -40°C ≤ TA ≤ +85°C for industrial -40°C ≤ TA ≤ +125°C for extended				
Param No.	**Symbol**	**Characteristic/ Device**	**Min**	**Typ**	**Max**	**Units**	**Conditions**
	ΔIWDT	**Module Differential Current**					
D022		**Watchdog Timer**	—	0.75	1.5	μA	VDD = 2.5V, +25°C
		PIC18LFXX8	—	0.75	8	μA	VDD = 2.0V, -40°C to +85°C
			—	7	25	μA	VDD = 4.2V, -40°C to +85°C
D022		**Watchdog Timer**	—	7	15	μA	VDD = 4.2V, +25°C
		PIC18FXX8	—	7	25	μA	VDD = 4.2V, -40°C to +85°C
			—	7	45	μA	VDD = 4.2V, -40°C to +125°C
D022A	ΔIBOR	**Brown-out Reset(5)**	—	29	35	μA	VDD = 2.0V, +25°C
		PIC18LFXX8	—	29	45	μA	VDD = 2.0V, -40°C to +85°C
			—	36	55	μA	VDD = 4.2V, -40°C to +85°C
D022A		**Brown-out Reset(5)**	—	36	40	μA	VDD = 4.2V, +25°C
		PIC18FXX8	—	36	55	μA	VDD = 4.2V, -40°C to +85°C
			—	36	65	μA	VDD = 4.2V, -40°C to +125°C
D022B	ΔILVD	**Low Voltage Detect(5)**	—	29	35	μA	VDD = 2.0V, +25°C
		PIC18LFXX8	—	29	45	μA	VDD = 2.0V, -40°C to +85°C
			—	33	55	μA	VDD = 4.2V, -40°C to +85°C
D022B		**Low Voltage Detect(5)**	—	33	40	μA	VDD = 4.2V, +25°C
		PIC18FXX8	—	33	50	μA	VDD = 4.2V, -40°C to +85°C
			—	33	65	μA	VDD = 4.2V, -40°C to +125°C
D025	ΔI_{TMR1}	**Timer1 Oscillator**	—	6.2	30	μA	VDD = 2.0V, +25°C
		PIC18LFXX8	—	6.2	45	μA	VDD = 2.0V, -40°C to +85°C
			—	7.5	55	μA	VDD = 4.2V, -40°C to +85°C
D025		**Timer1 Oscillator**	—	7.5	45	μA	VDD = 4.2V, +25°C
		PIC18FXX8	—	7.5	55	μA	VDD = 4.2V, -40°C to +85°C
			—	7.5	65	μA	VDD = 4.2V, -40°C to +125°C

Legend: Rows are shaded for improved readability.

Note 1: This is the limit to which VDD can be lowered in SLEEP mode or during a device RESET, without losing RAM data.

2: The supply current is mainly a function of the operating voltage and frequency. Other factors, such as I/O pin loading and switching rate, oscillator type, internal code execution pattern, and temperature, also have an impact on the current consumption.
The test conditions for all IDD measurements in active Operation mode are:
OSC1 = external square wave, from rail-to-rail; all I/O pins tri-stated, pulled to VDD
$\overline{\text{MCLR}}$ = VDD; WDT enabled/disabled as specified.

3: The power-down current in SLEEP mode does not depend on the oscillator type. Power-down current is measured with the part in SLEEP mode, with all I/O pins in hi-impedance state and tied to VDD and VSS, and all features that add delta current disabled (such as WDT, Timer1 Oscillator, BOR, ...).

4: For RC osc configuration, current through REXT is not included. The current through the resistor can be estimated by the formula Ir = VDD/2 REXT (mA) with REXT in kOhm.

5: The LVD and BOR modules share a large portion of circuitry. The ΔIBOR and ΔILVD currents are not additive. Once one of these modules is enabled, the other may also be enabled without further penalty.

27.2 DC Characteristics: PIC18FXX8 (Industrial, Extended) PIC18LFXX8 (Industrial)

DC CHARACTERISTICS			Standard Operating Conditions (unless otherwise stated) Operating temperature -40°C ≤ TA ≤ +85°C for industrial -40°C ≤ TA ≤ +125°C for extended			
Param No.	**Symbol**	**Characteristic/ Device**	**Min**	**Max**	**Units**	**Conditions**
	VIL	**Input Low Voltage**				
		I/O ports:				
D030		with TTL buffer	VSS	0.15 VDD	V	VDD < 4.5V
D030A			—	0.8	V	4.5V ≤ VDD ≤ 5.5V
D031		with Schmitt Trigger buffer	VSS	0.2 VDD	V	
		RC3 and RC4	VSS	0.3 VDD	V	
D032		$\overline{MCLR}$	VSS	0.2 VDD	V	
D032A		OSC1 (in XT, HS and LP modes) and T1OSI	VSS	0.3 VDD	V	
D033		OSC1 (in RC mode)(1)	VSS	0.2 VDD	V	
	VIH	**Input High Voltage**				
		I/O ports:				
D040		with TTL buffer	0.25 VDD + 0.8V	VDD	V	VDD < 4.5V
D040A			2.0	VDD	V	4.5V ≤ VDD ≤ 5.5V
D041		with Schmitt Trigger buffer	0.8 VDD	VDD	V	
		RC3 and RC4	0.7 VDD	VDD	V	
D042		$\overline{MCLR}$	0.8 VDD	VDD	V	
D042A		OSC1 (in XT, HS and LP modes) and T1OSI	0.7 VDD	VDD	V	
D043		OSC1 (RC mode)(1)	0.9 VDD	VDD	V	
	IIL	**Input Leakage Current(2,3)**				
D060		I/O ports	—	±1	μA	VSS ≤ VPIN ≤ VDD, Pin at hi-impedance
D061		$\overline{MCLR}$	—	±5	μA	Vss ≤ VPIN ≤ VDD
D063		OSC1	—	±5	μA	Vss ≤ VPIN ≤ VDD
	IPU	**Weak Pull-up Current**				
D070	IPURB	PORTB weak pull-up current	50	450	μA	VDD = 5V, VPIN = VSS

Note 1: In RC oscillator configuration, the OSC1/CLKI pin is a Schmitt Trigger input. It is not recommended that the PICmicro device be driven with an external clock while in RC mode.

2: The leakage current on the $\overline{MCLR}$ pin is strongly dependent on the applied voltage level. The specified levels represent normal operating conditions. Higher leakage current may be measured at different input voltages.

3: Negative current is defined as current sourced by the pin.

© 2003 Microchip Technology Inc.

27.2 DC Characteristics: PIC18FXX8 (Industrial, Extended) PIC18LFXX8 (Industrial) (Continued)

DC CHARACTERISTICS			Standard Operating Conditions (unless otherwise stated) Operating temperature -40°C ≤ TA ≤ +85°C for industrial -40°C ≤ TA ≤ +125°C for extended			
Param No.	**Symbol**	**Characteristic/ Device**	**Min**	**Max**	**Units**	**Conditions**
	VOL	**Output Low Voltage**				
D080		I/O ports	—	0.6	V	IOL = 8.5 mA, VDD = 4.2V, -40°C to +85°C
D080A			—	0.6	V	IOL = 7.0 mA, VDD = 4.2V, -40°C to +125°C
D083		OSC2/CLKO (RC mode)	—	0.6	V	IOL = 1.6 mA, VDD = 4.2V, -40°C to +85°C
D083A			—	0.6	V	IOL = 1.2 mA, VDD = 4.2V, -40°C to +125°C
	VOH	**Output High Voltage(3)**				
D090		I/O ports	VDD – 0.7	—	V	IOH = -3.0 mA, VDD = 4.2V, -40°C to +85°C
D090A			VDD – 0.7	—	V	IOH = -2.5 mA, VDD = 4.2V, -40°C to +125°C
D092		OSC2/CLKO (RC mode)	VDD – 0.7	—	V	IOH = -1.3 mA, VDD = 4.2V, -40°C to +85°C
D092A			VDD – 0.7	—	V	IOH = -1.0 mA, VDD = 4.2V, -40°C to +125°C
D150	VOD	**Open Drain High Voltage**	—	7.5	V	RA4 pin
		Capacitive Loading Specs on Output Pins				
D101	CIO	All I/O pins and OSC2 (in RC mode)	—	50	pF	To meet the AC Timing Specifications
D102	CB	SCL, SDA	—	400	pF	In I^2C mode

Note 1: In RC oscillator configuration, the OSC1/CLKI pin is a Schmitt Trigger input. It is not recommended that the PICmicro device be driven with an external clock while in RC mode.

2: The leakage current on the $\overline{MCLR}$ pin is strongly dependent on the applied voltage level. The specified levels represent normal operating conditions. Higher leakage current may be measured at different input voltages.

3: Negative current is defined as current sourced by the pin.

FIGURE 27-4: LOW VOLTAGE DETECT CHARACTERISTICS

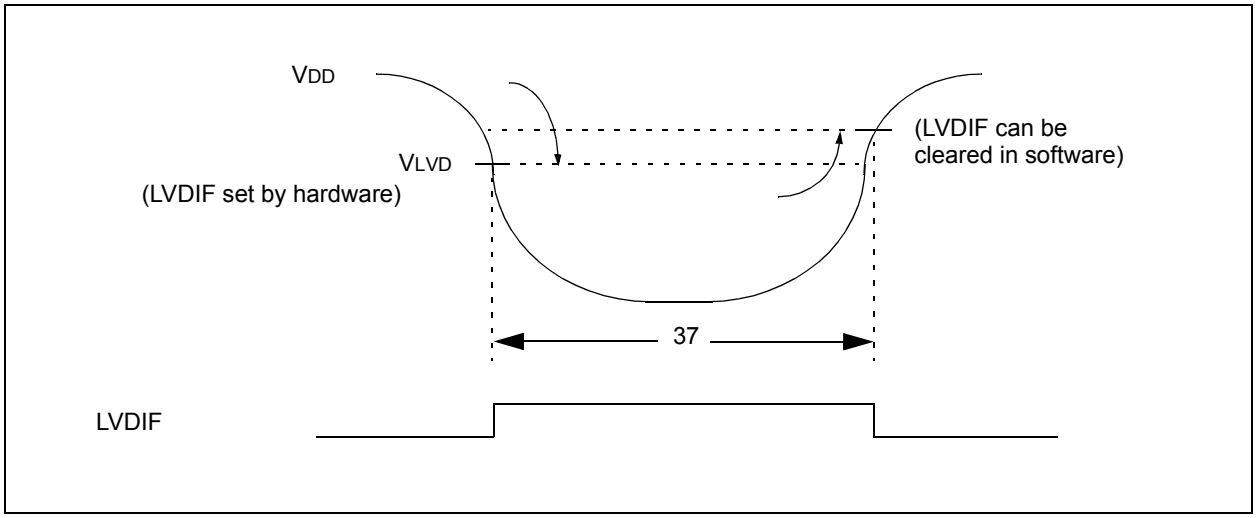

TABLE 27-1: LOW VOLTAGE DETECT CHARACTERISTICS

			Standard Operating Conditions (unless otherwise stated) Operating temperature -40°C ≤ TA ≤ +85°C for industrial -40°C ≤ TA ≤ +125°C for extended					
Param No.	**Symbol**	**Characteristic**		**Min**	**Typ**	**Max**	**Units**	**Conditions**
D420	VLVD	LVD Voltage	LVV = 0001	1.98	2.06	2.14	V	T ≥ 25°C
			LVV = 0010	2.18	2.27	2.36	V	T ≥ 25°C
			LVV = 0011	2.37	2.47	2.57	V	T ≥ 25°C
			LVV = 0100	2.48	2.58	2.68	V	
			LVV = 0101	2.67	2.78	2.89	V	
			LVV = 0110	2.77	2.89	3.01	V	
			LVV = 0111	2.98	3.1	3.22	V	
			LVV = 1000	3.27	3.41	3.55	V	
			LVV = 1001	3.47	3.61	3.75	V	
			LVV = 1010	3.57	3.72	3.87	V	
			LVV = 1011	3.76	3.92	4.08	V	
			LVV = 1100	3.96	4.13	4.3	V	
			LVV = 1101	4.16	4.33	4.5	V	
			LVV = 1110	4.45	4.64	4.83	V	

© 2003 Microchip Technology Inc.

TABLE 27-2: DC CHARACTERISTICS: EEPROM AND ENHANCED FLASH

DC Characteristics			Standard Operating Conditions				
Param No.	**Sym**	**Characteristic**	**Min**	**Typ†**	**Max**	**Units**	**Conditions**
		Internal Program Memory Programming Specifications					
D110	VPP	Voltage on $\overline{MCLR}$/VPP pin	9.00	—	13.25	V	
D113	IDDP	Supply Current during Programming	—	—	10	mA	
		Data EEPROM Memory					
D120	ED	Cell Endurance	100K	1M	—	E/W	-40°C to +85°C
D120A	ED	Byte Endurance	10K	100K	—	E/W	+85°C to +125°C
D121	VDRW	VDD for Read/Write	VMIN	—	5.5	V	Using EECON to read/write VMIN = Minimum operating voltage
D122	TDEW	Erase/Write Cycle Time	—	4	—	ms	
D123	TRETD	Characteristic Retention	40	—	—	Year	Provided no other specifications are violated
D124	TREF	Number of Total Erase/Write Cycles to Data EEPROM before Refresh*	1M	10M	—	Cycles	-40°C to +85°C
D124A	TREF	Number of Total Erase/Write Cycles before Refresh*	100K	1M	—	Cycles	+85°C to +125°C
		Program Flash Memory					
D130	EP	Cell Endurance	10K	100K	—	E/W	-40°C to +85°C
D130A	EP	Cell endurance	1000	10K	—	E/W	+85°C to +125°C
D131	VPR	VDD for Read	VMIN	—	5.5	V	VMIN = Minimum operating voltage
D132	VIE	VDD for Block Erase	4.5	—	5.5	V	Using ICSP port
D132A	VIW	VDD for Externally Timed Erase or Write	4.5	—	5.5	V	Using ICSP port
D132B	VPEW	VDD for Self-timed Write	VMIN	—	5.5	V	VMIN = Minimum operating voltage
D133	TIE	ICSP Erase Cycle Time	—	4	—	ms	VDD $\geq$ 4.5V
D133A	TIW	ICSP Erase or Write Cycle Time (externally timed)	1	—	—	ms	VDD $\geq$ 4.5V
D133A	TIW	Self-timed Write Cycle Time	—	2	—	ms	
D134	TRETD	Characteristic Retention	40	—	—	Year	Provided no other specifications are violated

† Data in “Typ” column is at 5.0V, 25°C unless otherwise stated. These parameters are for design guidance only and are not tested.

* See Section 5.8 for more information.

TABLE 27-3: COMPARATOR SPECIFICATIONS

Operating Conditions: V_{DD} range as described in Section 27.1, -40°C < T_A < +125°C.

Param No.	Sym	Characteristics	Min	Typ	Max	Units	Comments
D300	V_{IOFF}	Input Offset Voltage	—	± 5.0	± 10	mV	
D301	V_{ICM}	Input Common Mode Voltage	0	—	V_{DD} – 1.5	V	
D302	CMRR	CMRR	+55*	—	—	db	
D300	T_{RESP}	Response Time(1)	—	300* 350*	400* 600*	ns ns	PIC18FXX8 PIC18LFXX8
D301	T_{MC2OV}	Comparator Mode Change to Output Valid	—	—	10*	µs	

* These parameters are characterized but not tested.

Note 1: Response time measured with one comparator input at (V_{DD} – 1.5)/2 while the other input transitions from V_{SS} to V_{DD}.

TABLE 27-4: VOLTAGE REFERENCE SPECIFICATIONS

Operating Conditions: V_{DD} range as described in Section 27.1, -40°C < T_A < +125°C.

Param No.	Sym	Characteristics	Min	Typ	Max	Units	Comments
D310	V_{RES}	Resolution	V_{DD}/24	—	V_{DD}/32	LSB	
D311	V_{RAA}	Absolute Accuracy	—	—	0.5	LSB	
D312	V_{RUR}	Unit Resistor Value (R)	—	2K*	—	Ω	
D310	T_{SET}	Settling Time(1)	—	—	10*	µs	

* These parameters are characterized but not tested.

Note 1: Settling time measured while VRR = `1` and VR<3:0> transitions from `0000` to `1111`.

© 2003 Microchip Technology Inc.

27.3 AC (Timing) Characteristics

27.3.1 TIMING PARAMETER SYMBOLOGY

The timing parameter symbols have been created following one of the following formats:

1. TppS2ppS
2. TppS
3. TCC:ST (I^2C specifications only)
4. Ts (I^2C specifications only)

T			
F	Frequency	T	Time

Lowercase letters (pp) and their meanings:

pp			
cc	CCP1	osc	OSC1
ck	CLKO	rd	$\overline{RD}$
cs	$\overline{CS}$	rw	$\overline{RD}$ or $\overline{WR}$
di	SDI	sc	SCK
do	SDO	ss	$\overline{SS}$
dt	Data in	t0	T0CKI
io	I/O port	t1	T1CKI
mc	$\overline{MCLR}$	wr	$\overline{WR}$

Uppercase letters and their meanings:

S			
F	Fall	P	Period
H	High	R	Rise
I	Invalid (Hi-impedance)	V	Valid
L	Low	Z	Hi-impedance
I^2C only			
AA	output access	High	High
BUF	Bus free	Low	Low

TCC:ST (I^2C specifications only)

CC			
HD	Hold	SU	Setup
ST			
DAT	DATA input hold	STO	STOP condition
STA	START condition		

27.3.2 TIMING CONDITIONS

The temperature and voltages specified in Table 27-5 apply to all timing specifications, unless otherwise noted. Figure 27-5 specifies the load conditions for the timing specifications.

TABLE 27-5: TEMPERATURE AND VOLTAGE SPECIFICATIONS - AC

AC CHARACTERISTICS	**Standard Operating Conditions (unless otherwise stated)** Operating temperature -40°C ≤ TA ≤ +85°C for industrial -40°C ≤ TA ≤ +125°C for extended Operating voltage VDD range as described in DC spec Section 27.1. LC parts operate for industrial temperatures only.

FIGURE 27-5: LOAD CONDITIONS FOR DEVICE TIMING SPECIFICATIONS

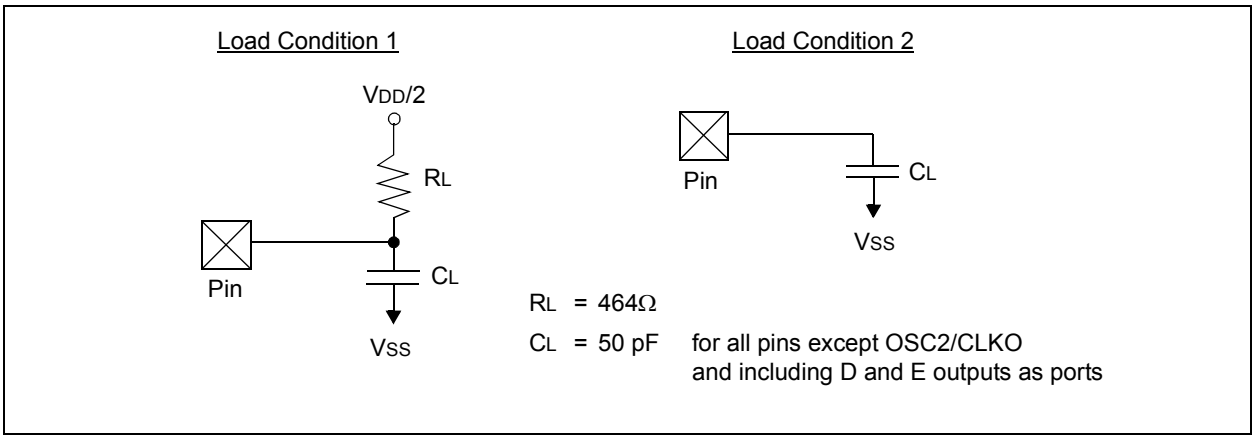

© 2003 Microchip Technology Inc.

27.3.3 TIMING DIAGRAMS AND SPECIFICATIONS

FIGURE 27-6: EXTERNAL CLOCK TIMING

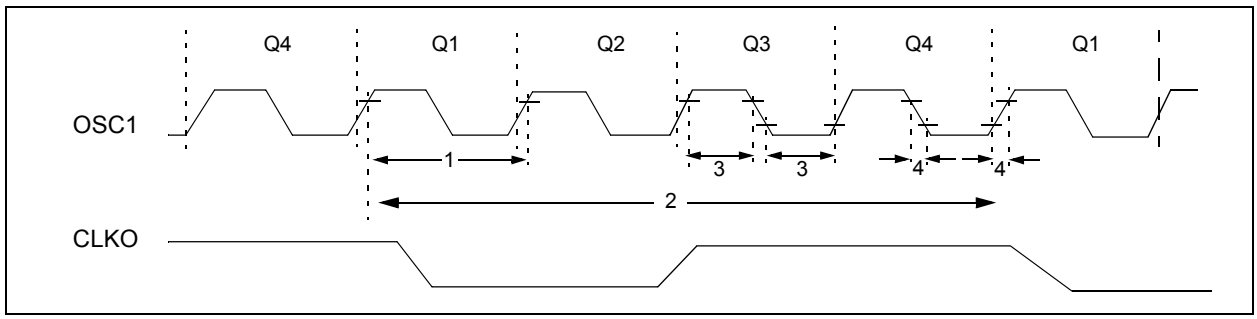

TABLE 27-6: EXTERNAL CLOCK TIMING REQUIREMENTS

Param No.	Symbol	Characteristic	Min	Max	Units	Conditions
1A	FOSC	External CLKI Frequency(1)	DC	40	MHz	EC, ECIO, -40°C to +85°C
		Oscillator Frequency(1)	DC	25	MHz	EC, ECIO, +85°C to +125°C
			DC	4	MHz	RC osc
			0.1	4	MHz	XT osc
			4	40	MHz	HS osc, -40°C to +85°C
			4	25	MHz	HS osc, +85°C to +125°C
			4	10	MHz	HS + PLL osc, -40°C to +85°C
			4	6.25	MHz	HS + PLL osc, +85°C to +125°C
			DC	200	kHz	LP osc
1	TOSC	External CLKI Period(1)	25	—	ns	EC, ECIO, -40°C to +85°C
		Oscillator Period(1)	40	—	ns	EC, ECIO, +85°C to +125°C
			250	—	ns	RC osc
			250	10,000	ns	XT osc
			25	—	ns	HS osc, -40°C to +85°C
			40	—	ns	HS osc, +85°C to +125°C
			100	250	ns	HS + PLL osc, -40°C to +85°C
			160	250	ns	HS + PLL osc, +85°C to +125°C
			5	200	µs	LP osc
2	TCY	Instruction Cycle Time(1)	100	—	ns	TCY = 4/FOSC, -40°C to +85°C
			160	—	ns	TCY = 4/FOSC, +85°C to +125°C
3	TosL, TosH	External Clock in (OSC1) High or Low Time	30	—	ns	XT osc
			2.5	—	ns	LP osc
			10	—	µs	HS osc
4	TosR, TosF	External Clock in (OSC1) Rise or Fall Time	—	20	ns	XT osc
			—	50	ns	LP osc
			—	7.5	ns	HS osc

Note 1: Instruction cycle period (TCY) equals four times the input oscillator time-base period. All specified values are based on characterization data for that particular oscillator type under standard operating conditions with the device executing code. Exceeding these specified limits may result in an unstable oscillator operation and/or higher than expected current consumption. All devices are tested to operate at "Min." values with an external clock applied to the OSC1/CLKI pin. When an external clock input is used, the "Max." cycle time limit is "DC" (no clock) for all devices.

TABLE 27-7: PLL CLOCK TIMING SPECIFICATIONS (V_{DD} = 4.2 TO 5.5V)

Param No.	Sym	Characteristic	Min	Typ†	Max	Units	Conditions
—	FOSC	Oscillator Frequency Range	4	—	10	MHz	HS mode only
—	FSYS	On-chip VCO System Frequency	16	—	40	MHz	HS mode only
—	t_{rc}	PLL Start-up Time (Lock Time)	—	—	2	ms	
—	ΔCLK	CLKO Stability (Jitter)	-2	—	+2	%	

† Data in "Typ" column is at 5V, 25°C unless otherwise stated. These parameters are for design guidance only and are not tested.

FIGURE 27-7: CLKO AND I/O TIMING

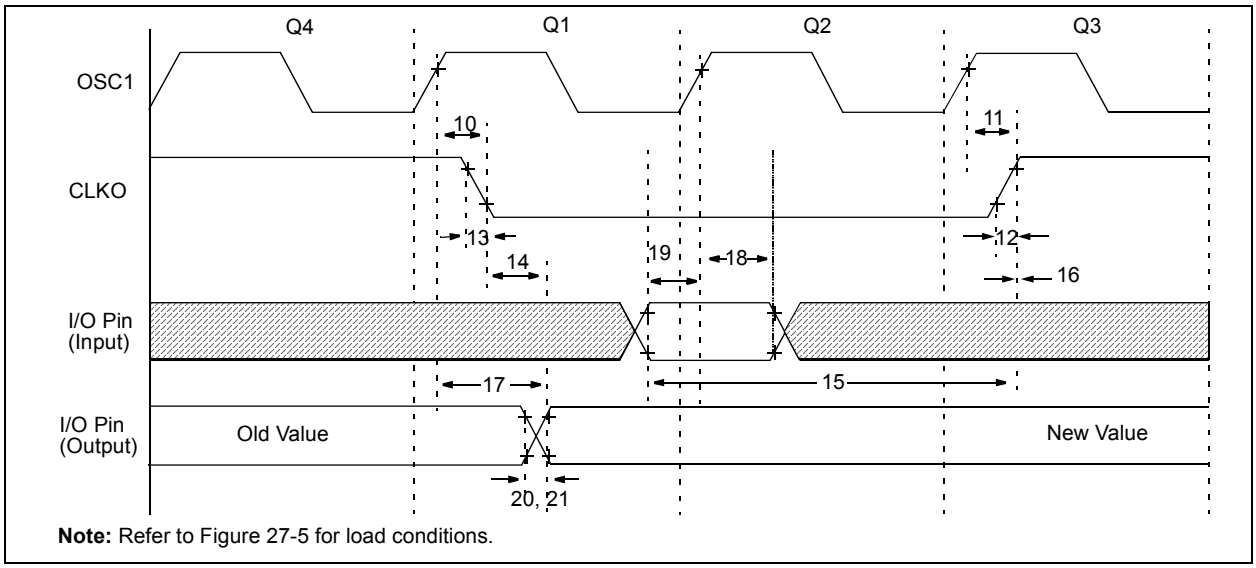

Note: Refer to Figure 27-5 for load conditions.

TABLE 27-8: CLKO AND I/O TIMING REQUIREMENTS

Param No.	Symbol	Characteristic		Min	Typ	Max	Units	Conditions
10	TosH2ckL	OSC1↑ to CLKO↓		—	75	200	ns	**(1)**
11	TosH2ckH	OSC1↑ to CLKO↑		—	75	200	ns	**(1)**
12	TckR	CLKO rise time		—	35	100	ns	**(1)**
13	TckF	CLKO fall time		—	35	100	ns	**(1)**
14	TckL2ioV	CLKO ↓ to Port out valid		—	—	0.5 TCY + 20	ns	**(1)**
15	TioV2ckH	Port in valid before CLKO↑		0.25 TCY + 25	—	—	ns	**(1)**
16	TckH2ioI	Port in hold after CLKO↑		0	—	—	ns	**(1)**
17	TosH2ioV	OSC1↑ (Q1 cycle) to Port out valid		—	50	150	ns	
18	TosH2ioI	OSC1↑ (Q2 cycle) to Port input invalid (I/O in hold time)	PIC18**F**XX8	100	—	—	ns	
18A			PIC18**LF**XX8	200	—	—	ns	
19	TioV2osH	Port input valid to OSC1↑ (I/O in setup time)		0	—	—	ns	
20	TIOR	Port output rise time	PIC18**F**XX8	—	10	25	ns	
20A			PIC18**LF**XX8	—	—	60	ns	
21	TIOF	Port output fall time	PIC18**F**XX8	—	10	25	ns	
21A			PIC18**LF**XX8	—	—	60	ns	
22††	TINP	INT pin high or low time		TCY	—	—	ns	
23††	TRBP	RB7:RB4 change INT high or low time		TCY	—	—	ns	
24††	TRCP	RC7:RC4 change INT high or low time		20	—	—	ns	

†† These parameters are asynchronous events, not related to any internal clock edges.

Note 1: Measurements are taken in RC mode where CLKO pin output is 4 x TOSC.

© 2003 Microchip Technology Inc.

FIGURE 27-8: RESET, WATCHDOG TIMER, OSCILLATOR START-UP TIMER AND POWER-UP TIMER TIMING

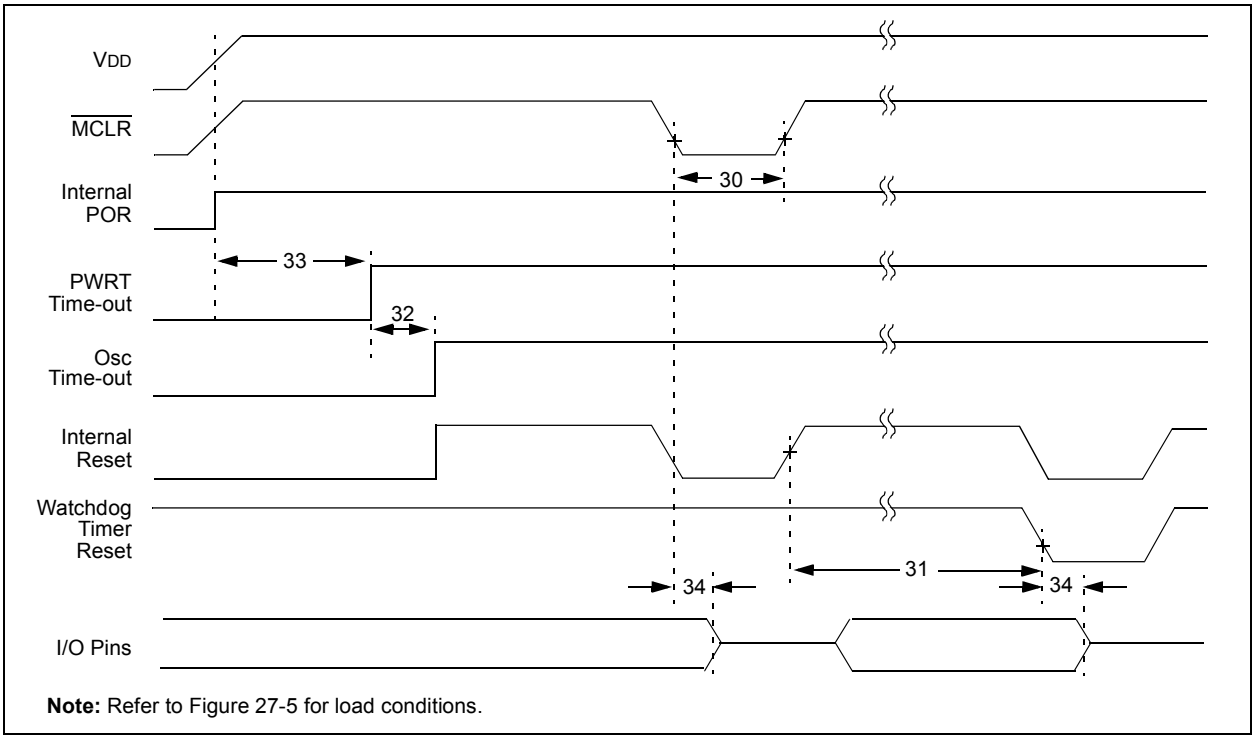

Note: Refer to Figure 27-5 for load conditions.

FIGURE 27-9: BROWN-OUT RESET AND LOW VOLTAGE DETECT TIMING

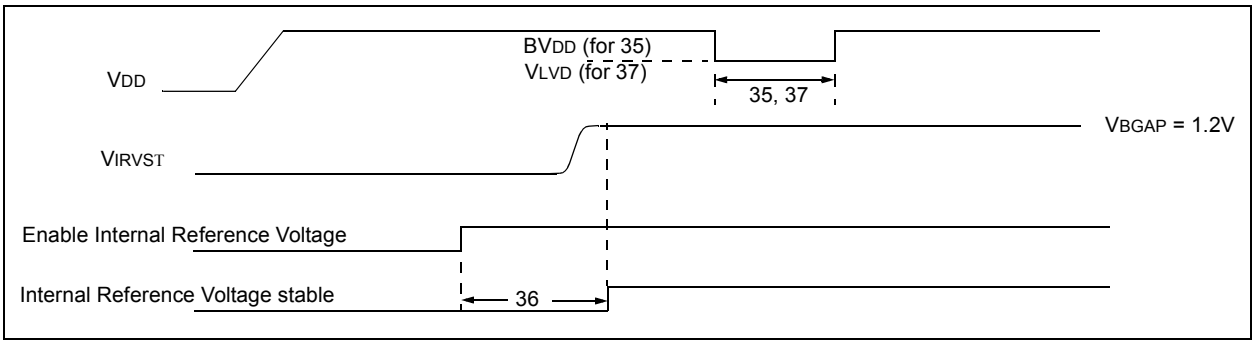

TABLE 27-9: RESET, WATCHDOG TIMER, OSCILLATOR START-UP TIMER, POWER-UP TIMER, BROWN-OUT RESET AND LOW VOLTAGE DETECT REQUIREMENTS

Param No.	Symbol	Characteristic	Min	Typ	Max	Units	Conditions
30	TmcL	$\overline{MCLR}$ Pulse Width (low)	2	—	—	μs	
31	TWDT	Watchdog Timer Time-out Period (No Prescaler)	7	18	33	ms	
32	TOST	Oscillation Start-up Timer Period	1024 TOSC	—	1024 TOSC	—	TOSC = OSC1 period
33	TPWRT	Power-up Timer Period	28	72	132	ms	
34	TIOZ	I/O Hi-impedance from $\overline{MCLR}$ Low or Watchdog Timer Reset	—	2	—	μs	
35	TBOR	Brown-out Reset Pulse Width	200	—	—	μs	For VDD ≤ BVDD (see D005)
36	TIVRST	Time for Internal Reference Voltage to become stable	—	20	50	μs	
37	TLVD	Low Voltage Detect Pulse Width	200	—	—	μs	For VDD ≤ VLVD (see D420)

FIGURE 27-10: TIMER0 AND TIMER1 EXTERNAL CLOCK TIMINGS

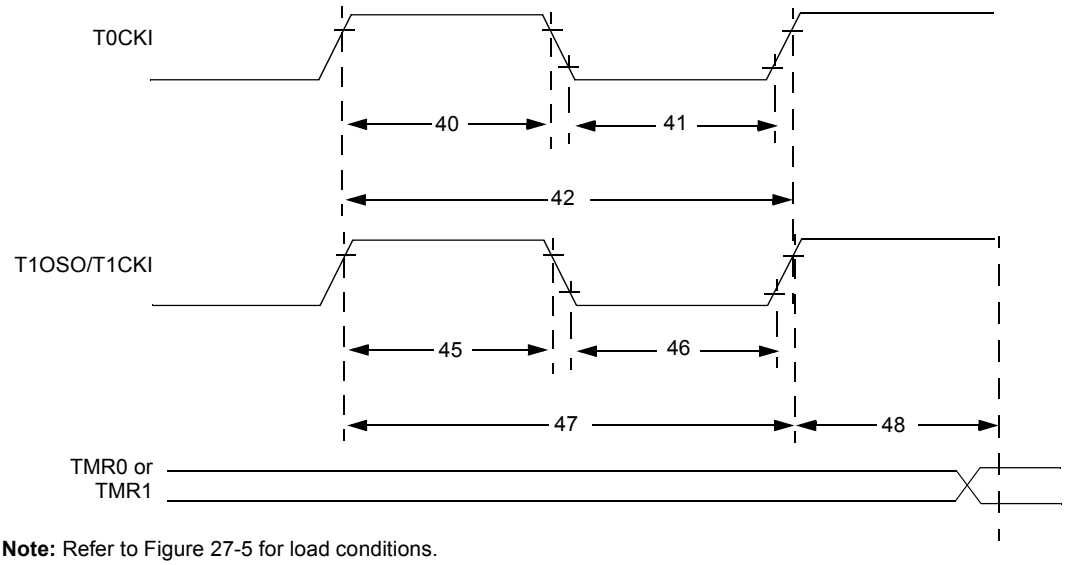

Note: Refer to Figure 27-5 for load conditions.

TABLE 27-10: TIMER0 AND TIMER1 EXTERNAL CLOCK REQUIREMENTS

Param No.	Symbol	Characteristic			Min	Max	Units	Conditions
40	Tt0H	T0CKI High Pulse Width		No prescaler	0.5 TCY + 20	—	ns	
				With prescaler	10	—	ns	
41	Tt0L	T0CKI Low Pulse Width		No prescaler	0.5 TCY + 20	—	ns	
				With prescaler	10	—	ns	
42	Tt0P	T0CKI Period		No prescaler	TCY + 10	—	ns	
				With prescaler	Greater of: 20 ns or TCY + 40 / N	—	ns	N = prescale value (1, 2, 4,..., 256)
45	Tt1H	T1CKI High Time	Synchronous, no prescaler		0.5 TCY + 20	—	ns	
			Synchronous, with prescaler	PIC18**F**XX8	10	—	ns	
				PIC18**LF**XX8	25	—	ns	
			Asynchronous	PIC18**F**XX8	30	—	ns	
				PIC18**LF**XX8	50	—	ns	
46	Tt1L	T1CKI Low Time	Synchronous, no prescaler		0.5 TCY + 5	—	ns	
			Synchronous, with prescaler	PIC18**F**XX8	10	—	ns	
				PIC18**LF**XX8	25	—	ns	
			Asynchronous	PIC18**F**XX8	30	—	ns	
				PIC18**LF**XX8	TBD	TBD	ns	
47	Tt1P	T1CKI Input Period	Synchronous		Greater of: 20 ns or TCY + 40 / N	—	ns	N = prescale value (1, 2, 4, 8)
			Asynchronous		60	—	ns	
	Ft1	T1CKI Oscillator Input Frequency Range			DC	50	kHz	
48	Tcke2tmrl	Delay from External T1CKI Clock Edge to Timer Increment			2 TOSC	7 TOSC	—	

© 2003 Microchip Technology Inc.

FIGURE 27-11: CAPTURE/COMPARE/PWM TIMINGS (CCP1 AND ECCP1)

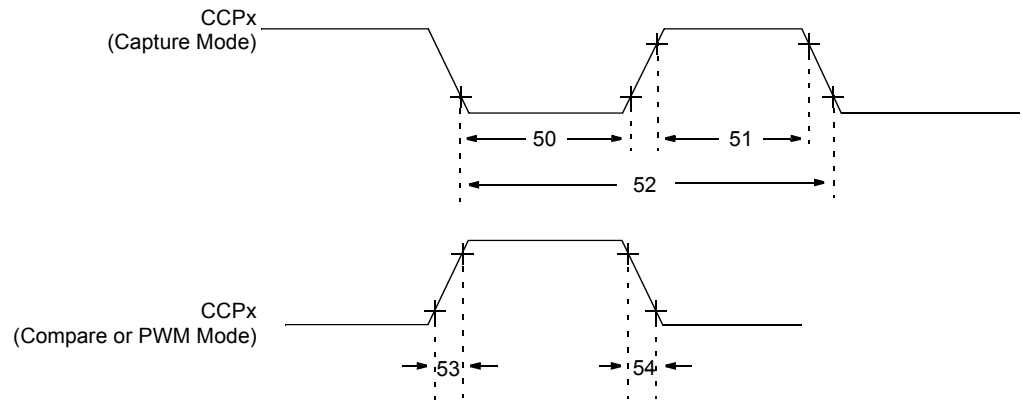

Note: Refer to Figure 27-5 for load conditions.

TABLE 27-11: CAPTURE/COMPARE/PWM REQUIREMENTS (CCP1 AND ECCP1)

Param No.	Symbol	Characteristic			Min	Max	Units	Conditions
50	TccL	CCPx input low time	No Prescaler		0.5 TCY + 20	—	ns	
			With Prescaler	PIC18**F**XX8	10	—	ns	
				PIC18**LF**XX8	20	—	ns	
51	TccH	CCPx input high time	No Prescaler		0.5 TCY + 20	—	ns	
			With Prescaler	PIC18**F**XX8	10	—	ns	
				PIC18**LF**XX8	20	—	ns	
52	TccP	CCPx input period			$\frac{3\ T_{CY} + 40}{N}$	—	ns	N = prescale value (1,4 or 16)
53	TccR	CCPx output fall time		PIC18**F**XX8	—	25	ns	
				PIC18**LF**XX8	—	45	ns	
54	TccF	CCPx output fall time		PIC18**F**XX8	—	25	ns	
				PIC18**LF**XX8	—	45	ns	

FIGURE 27-12: PARALLEL SLAVE PORT TIMING (PIC18F248 AND PIC18F458)

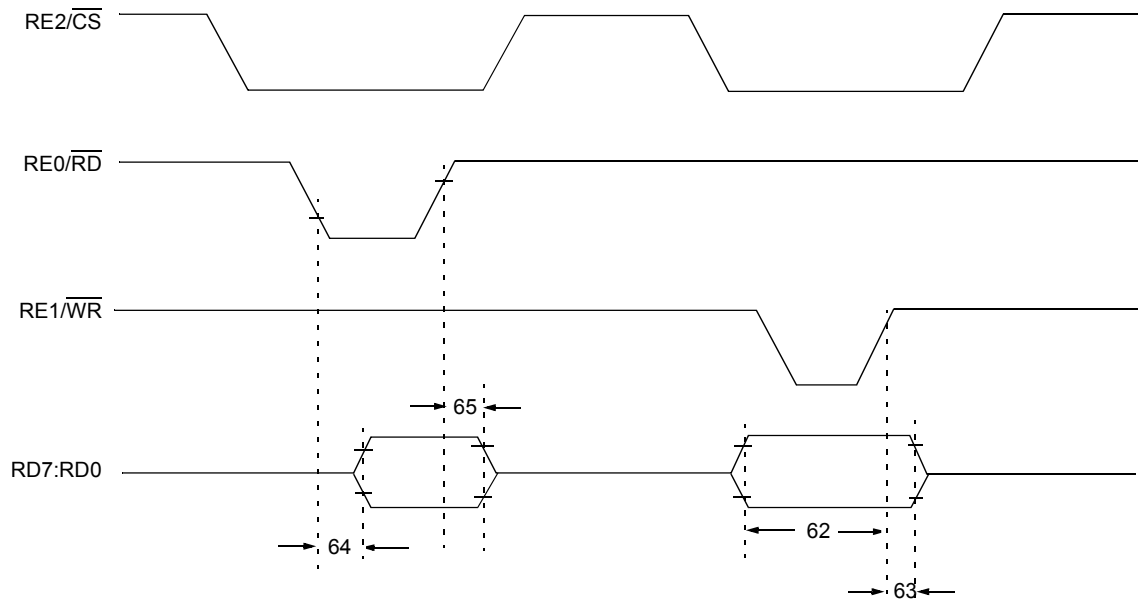

Note: Refer to Figure 27-5 for load conditions.

TABLE 27-12: PARALLEL SLAVE PORT REQUIREMENTS (PIC18F248 AND PIC18F458)

Param No.	Symbol	Characteristic		Min	Max	Units	Conditions
62	TdtV2wrH	Data-in valid before $\overline{WR}\uparrow$ or $\overline{CS}\uparrow$ (setup time)		20 25	— —	ns ns	 Extended Temp. range
63	TwrH2dtI	$\overline{WR}\uparrow$ or $\overline{CS}\uparrow$ to data-in invalid (hold time)	PIC18**F**XX8	20	—	ns	
			PIC18**LF**XX8	35	—	ns	
64	TrdL2dtV	$\overline{RD}\downarrow$ and $\overline{CS}\downarrow$ to data-out valid		— —	80 90	ns ns	 Extended Temp. range
65	TrdH2dtI	$\overline{RD}\uparrow$ or $\overline{CS}\downarrow$ to data-out invalid		10	30	ns	
66	TibfINH	Inhibit the IBF flag bit being cleared from $\overline{WR}\uparrow$ or $\overline{CS}\uparrow$		—	3 TCY	ns	

© 2003 Microchip Technology Inc.

FIGURE 27-13: EXAMPLE SPI MASTER MODE TIMING (CKE = 0)

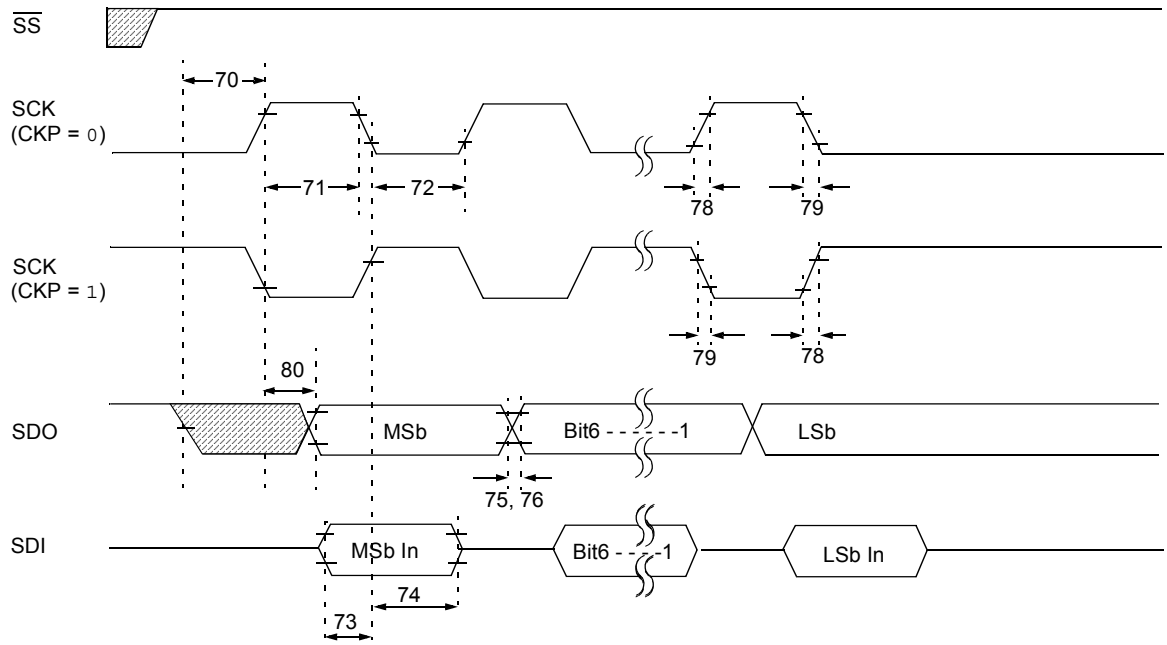

Note: Refer to Figure 27-5 for load conditions.

TABLE 27-13: EXAMPLE SPI MODE REQUIREMENTS (MASTER MODE, CKE = 0)

Param No.	Symbol	Characteristic		Min	Max	Units	Conditions
70	TssL2scH, TssL2scL	$\overline{SS}\downarrow$ to SCK↓ or SCK↑ input		TCY	—	ns	
71	TscH	SCK input high time (Slave mode)	Continuous	1.25 TCY + 30	—	ns	
71A			Single Byte	40	—	ns	**(Note 1)**
72	TscL	SCK input low time (Slave mode)	Continuous	1.25 TCY + 30	—	ns	
72A			Single Byte	40	—	ns	**(Note 1)**
73	TdiV2scH, TdiV2scL	Setup time of SDI data input to SCK edge		100	—	ns	
73A	TB2B	Last clock edge of Byte1 to the 1st clock edge of Byte2		1.5 TCY + 40	—	ns	**(Note 2)**
74	TscH2diL, TscL2diL	Hold time of SDI data input to SCK edge		100	—	ns	
75	TdoR	SDO data output rise time	PIC18**F**XX8	—	25	ns	
			PIC18**LF**XX8	—	45	ns	
76	TdoF	SDO data output fall time		—	25	ns	
78	TscR	SCK output rise time (Master mode)	PIC18**F**XX8	—	25	ns	
			PIC18**LF**XX8	—	45	ns	
79	TscF	SCK output fall time (Master mode)		—	25	ns	
80	TscH2doV, TscL2doV	SDO data output valid after SCK edge	PIC18**F**XX8	—	50	ns	
			PIC18**LF**XX8	—	100	ns	

Note 1: Requires the use of parameter # 73A.
2: Only if parameter #'s 71A and 72A are used.

FIGURE 27-14: EXAMPLE SPI MASTER MODE TIMING (CKE = 1)

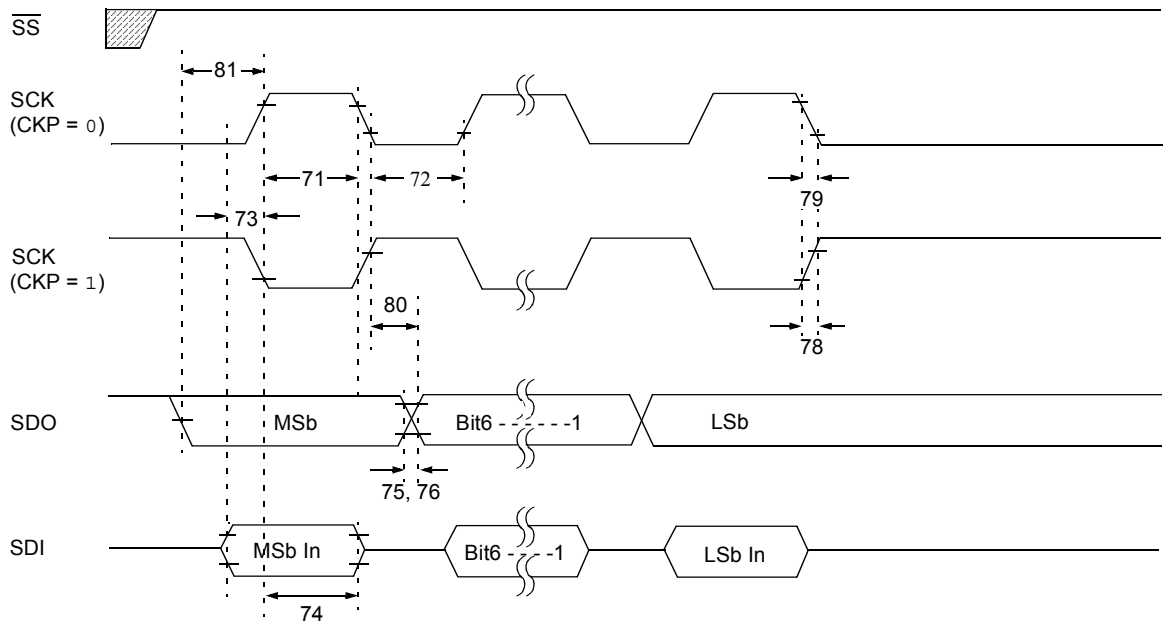

Note: Refer to Figure 27-5 for load conditions.

TABLE 27-14: EXAMPLE SPI MODE REQUIREMENTS (MASTER MODE, CKE = 1)

Param No.	Symbol	Characteristic		Min	Max	Units	Conditions
71	TscH	SCK input high time (Slave mode)	Continuous	1.25 TCY + 30	—	ns	
71A			Single Byte	40	—	ns	**(Note 1)**
72	TscL	SCK input low time (Slave mode)	Continuous	1.25 TCY + 30	—	ns	
72A			Single Byte	40	—	ns	**(Note 1)**
73	TdiV2scH, TdiV2scL	Setup time of SDI data input to SCK edge		100	—	ns	
73A	TB2B	Last clock edge of Byte1 to the 1st clock edge of Byte2		1.5 TCY + 40	—	ns	**(Note 2)**
74	TscH2diL, TscL2diL	Hold time of SDI data input to SCK edge		100	—	ns	
75	TdoR	SDO data output rise time	PIC18**F**XX8	—	25	ns	
			PIC18**LF**XX8	—	45	ns	
76	TdoF	SDO data output fall time		—	25	ns	
78	TscR	SCK output rise time (Master mode)	PIC18**F**XX8	—	25	ns	
			PIC18**LF**XX8	—	45	ns	
79	TscF	SCK output fall time (Master mode)		—	25	ns	
80	TscH2doV, TscL2doV	SDO data output valid after SCK edge	PIC18**F**XX8	—	50	ns	
			PIC18**LF**XX8	—	100	ns	
81	TdoV2scH, TdoV2scL	SDO data output setup to SCK edge		TCY	—	ns	

Note 1: Requires the use of parameter # 73A.
2: Only if parameter #'s 71A and 72A are used.

© 2003 Microchip Technology Inc.

FIGURE 27-15: EXAMPLE SPI SLAVE MODE TIMING (CKE = 0)

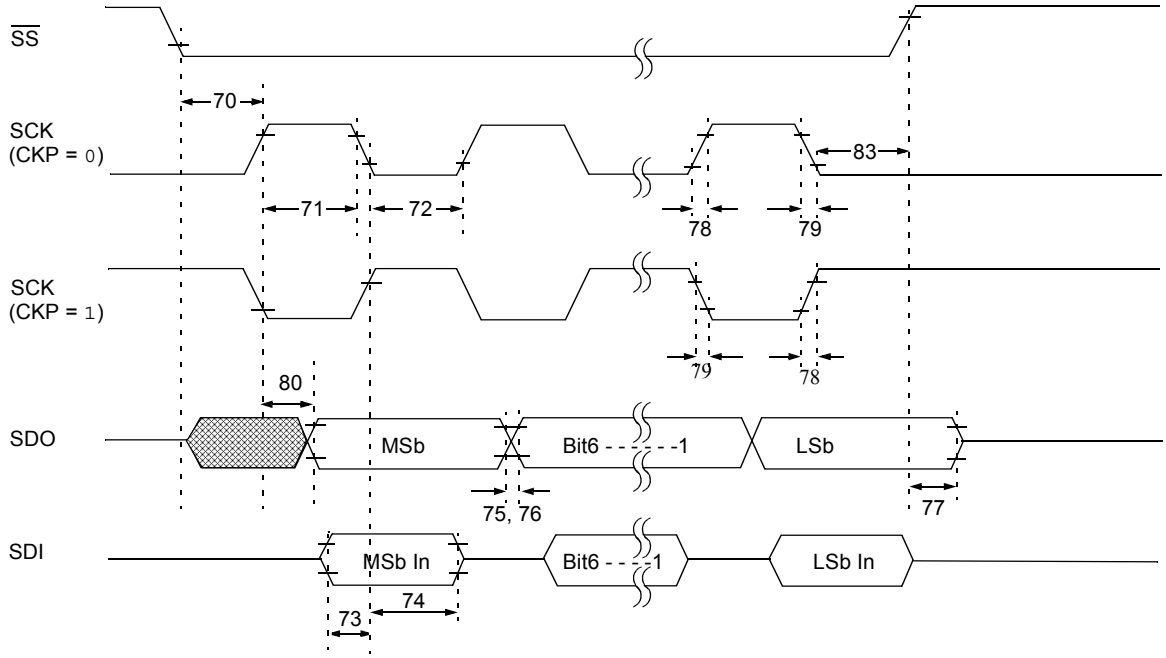

Note: Refer to Figure 27-5 for load conditions.

TABLE 27-15: EXAMPLE SPI MODE REQUIREMENTS, SLAVE MODE TIMING (CKE = 0)

Param No.	Symbol	Characteristic		Min	Max	Units	Conditions
70	TssL2scH, TssL2scL	$\overline{SS}\downarrow$ to SCK↓ or SCK↑ input		TCY	—	ns	
71	TscH	SCK input high time (Slave mode)	Continuous	1.25 TCY + 30	—	ns	
71A			Single Byte	40	—	ns	**(Note 1)**
72	TscL	SCK input low time (Slave mode)	Continuous	1.25 TCY + 30	—	ns	
72A			Single Byte	40	—	ns	**(Note 1)**
73	TdiV2scH, TdiV2scL	Setup time of SDI data input to SCK edge		100	—	ns	
73A	TB2B	Last clock edge of Byte1 to the 1st clock edge of Byte2		1.5 TCY + 40	—	ns	**(Note 2)**
74	TscH2diL, TscL2diL	Hold time of SDI data input to SCK edge		100	—	ns	
75	TdoR	SDO data output rise time	PIC18**F**XX8	—	25	ns	
			PIC18**LF**XX8		45	ns	
76	TdoF	SDO data output fall time		—	25	ns	
77	TssH2doZ	$\overline{SS}\uparrow$ to SDO output hi-impedance		10	50	ns	
78	TscR	SCK output rise time (Master mode)	PIC18**F**XX8	—	25	ns	
			PIC18**LF**XX8		45	ns	
79	TscF	SCK output fall time (Master mode)		—	25	ns	
80	TscH2doV, TscL2doV	SDO data output valid after SCK edge	PIC18**F**XX8	—	50	ns	
			PIC18**LF**XX8		100	ns	
83	TscH2ssH, TscL2ssH	$\overline{SS}\uparrow$ after SCK edge		1.5 TCY + 40	—	ns	

Note 1: Requires the use of parameter # 73A.
2: Only if parameter #'s 71A and 72A are used.

FIGURE 27-16: EXAMPLE SPI SLAVE MODE TIMING (CKE = 1)

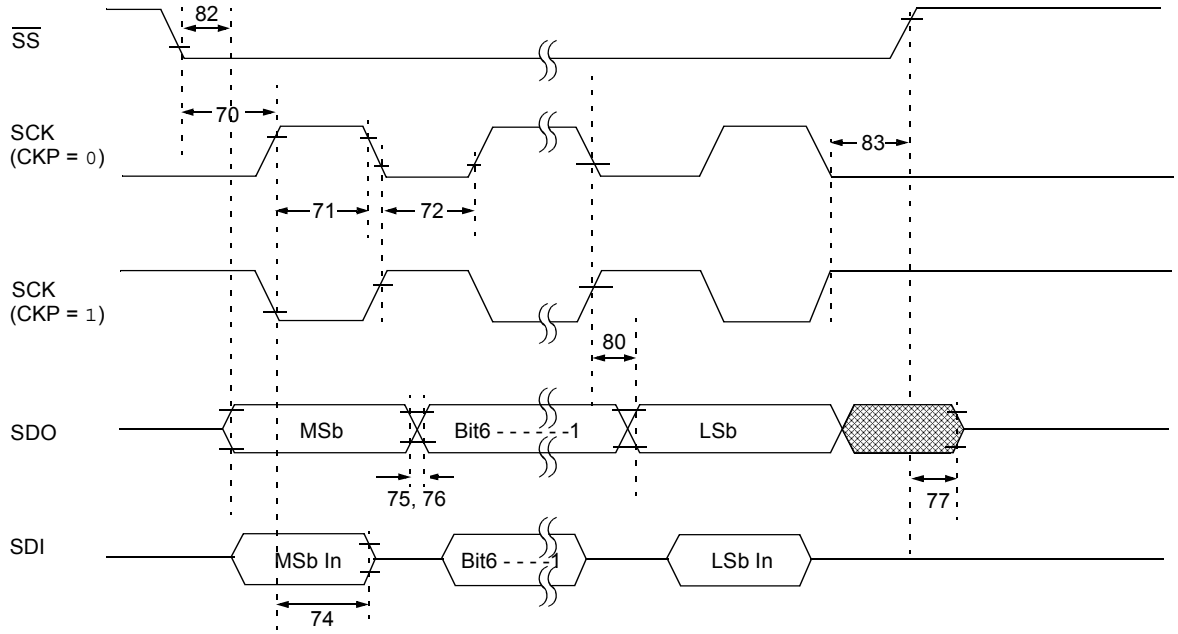

Note: Refer to Figure 27-5 for load conditions.

TABLE 27-16: EXAMPLE SPI SLAVE MODE REQUIREMENTS (CKE = 1)

Param No.	Symbol	Characteristic		Min	Max	Units	Conditions
70	TssL2scH, TssL2scL	$\overline{SS}\downarrow$ to SCK↓ or SCK↑ input		TCY	—	ns	
71	TscH	SCK input high time (Slave mode)	Continuous	1.25 TCY + 30	—	ns	
71A			Single Byte	40	—	ns	**(Note 1)**
72	TscL	SCK input low time (Slave mode)	Continuous	1.25 TCY + 30	—	ns	
72A			Single Byte	40	—	ns	**(Note 1)**
73A	TB2B	Last clock edge of Byte1 to the 1st clock edge of Byte2		1.5 TCY + 40	—	ns	**(Note 2)**
74	TscH2diL, TscL2diL	Hold time of SDI data input to SCK edge		100	—	ns	
75	TdoR	SDO data output rise time	PIC18**F**XX8	—	25	ns	
			PIC18**LF**XX8	—	45	ns	
76	TdoF	SDO data output fall time		—	25	ns	
77	TssH2doZ	$\overline{SS}\uparrow$ to SDO output hi-impedance		10	50	ns	
78	TscR	SCK output rise time (Master mode)	PIC18**F**XX8	—	25	ns	
			PIC18**LF**XX8	—	45	ns	
79	TscF	SCK output fall time (Master mode)		—	25	ns	
80	TscH2doV, TscL2doV	SDO data output valid after SCK edge	PIC18**F**XX8	—	50	ns	
			PIC18**LF**XX8	—	100	ns	
82	TssL2doV	SDO data output valid after $\overline{SS}\downarrow$ edge	PIC18**F**XX8	—	50	ns	
			PIC18**LF**XX8	—	100	ns	
83	TscH2ssH, TscL2ssH	$\overline{SS}\uparrow$ after SCK edge		1.5 TCY + 40	—	ns	

Note 1: Requires the use of parameter # 73A.
2: Only if parameter #'s 71A and 72A are used.

© 2003 Microchip Technology Inc.

FIGURE 27-17: I²C BUS START/STOP BITS TIMING

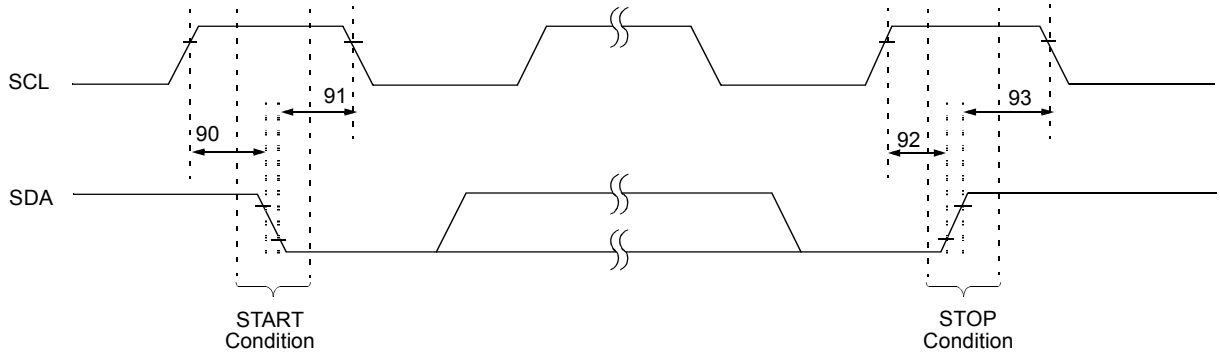

Note: Refer to Figure 27-5 for load conditions.

TABLE 27-17: I²C BUS START/STOP BITS REQUIREMENTS (SLAVE MODE)

Param No.	Symbol	Characteristic		Min	Max	Units	Conditions
90	TSU:STA	START condition	100 kHz mode	4700	—	ns	Only relevant for Repeated START condition
		Setup time	400 kHz mode	600	—		
91	THD:STA	START condition	100 kHz mode	4000	—	ns	After this period, the first clock pulse is generated
		Hold time	400 kHz mode	600	—		
92	TSU:STO	STOP condition	100 kHz mode	4700	—	ns	
		Setup time	400 kHz mode	600	—		
93	THD:STO	STOP condition	100 kHz mode	4000	—	ns	
		Hold time	400 kHz mode	600	—		

FIGURE 27-18: I²C BUS DATA TIMING

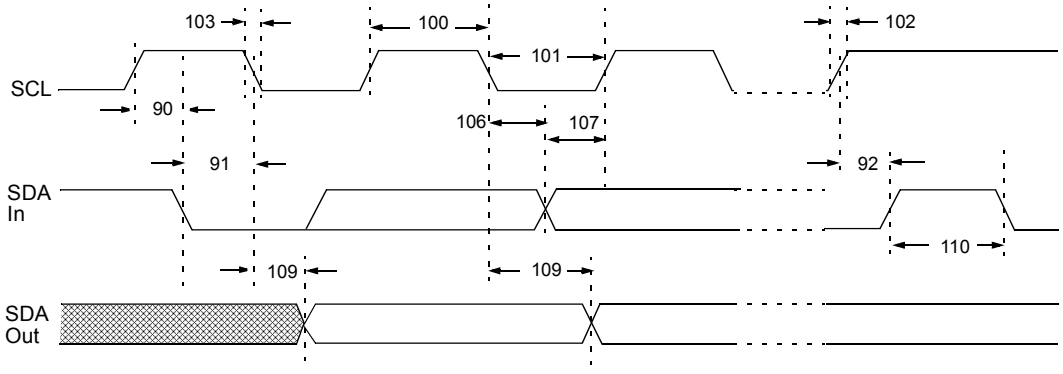

Note: Refer to Figure 27-5 for load conditions.

TABLE 27-18: I^2C BUS DATA REQUIREMENTS (SLAVE MODE)

Param No.	Symbol	Characteristic		Min	Max	Units	Conditions
100	THIGH	Clock high time	100 kHz mode	4.0	—	μs	PIC18FXX8 must operate at a minimum of 1.5 MHz
			400 kHz mode	0.6	—	μs	PIC18FXX8 must operate at a minimum of 10 MHz
			SSP Module	1.5 TCY	—		
101	TLOW	Clock low time	100 kHz mode	4.7	—	μs	PIC18FXX8 must operate at a minimum of 1.5 MHz
			400 kHz mode	1.3	—	μs	PIC18FXX8 must operate at a minimum of 10 MHz
			SSP module	1.5 TCY	—	ns	
102	TR	SDA and SCL rise time	100 kHz mode	—	1000	ns	
			400 kHz mode	20 + 0.1 CB	300	ns	CB is specified to be from 10 to 400 pF
103	TF	SDA and SCL fall time	100 kHz mode	—	300	ns	
			400 kHz mode	20 + 0.1 CB	300	ns	CB is specified to be from 10 to 400 pF
90	TSU:STA	START condition setup time	100 kHz mode	4.7	—	μs	Only relevant for Repeated START condition
			400 kHz mode	0.6	—	μs	
91	THD:STA	START condition hold time	100 kHz mode	4.0	—	μs	After this period the first clock pulse is generated
			400 kHz mode	0.6	—	μs	
106	THD:DAT	Data input hold time	100 kHz mode	0	—	ns	
			400 kHz mode	0	0.9	μs	
107	TSU:DAT	Data input setup time	100 kHz mode	250	—	ns	**(Note 2)**
			400 kHz mode	100	—	ns	
92	TSU:STO	STOP condition setup time	100 kHz mode	4.7	—	μs	
			400 kHz mode	0.6	—	μs	
109	TAA	Output valid from clock	100 kHz mode	—	3500	ns	**(Note 1)**
			400 kHz mode	—	—	ns	
110	TBUF	Bus free time	100 kHz mode	4.7	—	μs	Time the bus must be free before a new transmission can start
			400 kHz mode	1.3	—	μs	
D102	CB	Bus capacitive loading		—	400	pF	

Note 1: As a transmitter, the device must provide this internal minimum delay time to bridge the undefined region (min. 300 ns) of the falling edge of SCL to avoid unintended generation of START or STOP conditions.

2: A Fast mode I^2C bus device can be used in a Standard mode I^2C bus system, but the requirement $T_{SU;DAT} \geq 250$ ns must then be met. This will automatically be the case if the device does not stretch the LOW period of the SCL signal. If such a device does stretch the LOW period of the SCL signal, it must output the next data bit to the SDA line.
Before the SCL line is released, TR max. + TSU:DAT = 1000 + 250 = 1250 ns (according to the Standard mode I^2C bus specification).

© 2003 Microchip Technology Inc.

FIGURE 27-19: MASTER SSP I²C BUS START/STOP BITS TIMING WAVEFORMS

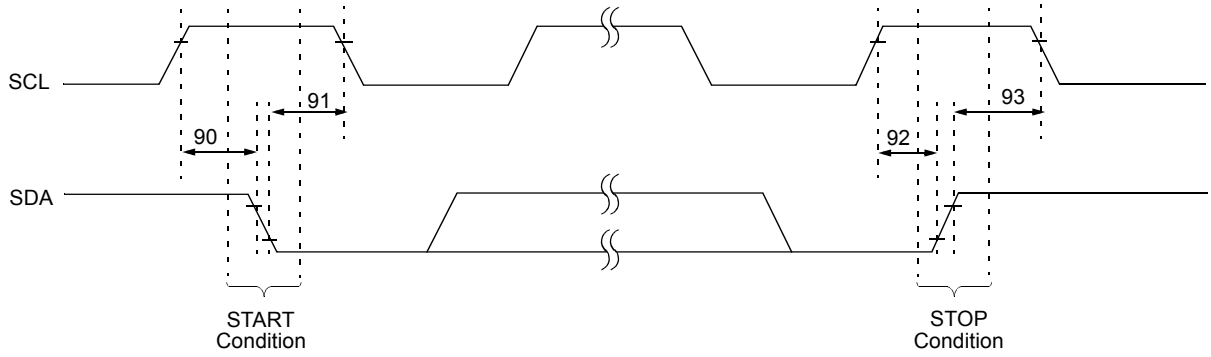

Note: Refer to Figure 27-5 for load conditions.

TABLE 27-19: MASTER SSP I²C BUS START/STOP BITS REQUIREMENTS

Param No.	Symbol	Characteristic		Min	Max	Units	Conditions
90	TSU:STA	START condition Setup time	100 kHz mode	2(TOSC)(BRG + 1)	—	ns	Only relevant for Repeated START condition
			400 kHz mode	2(TOSC)(BRG + 1)	—		
			1 MHz mode(1)	2(TOSC)(BRG + 1)	—		
91	THD:STA	START condition Hold time	100 kHz mode	2(TOSC)(BRG + 1)	—	ns	After this period, the first clock pulse is generated
			400 kHz mode	2(TOSC)(BRG + 1)	—		
			1 MHz mode(1)	2(TOSC)(BRG + 1)	—		
92	TSU:STO	STOP condition Setup time	100 kHz mode	2(TOSC)(BRG + 1)	—	ns	
			400 kHz mode	2(TOSC)(BRG + 1)	—		
			1 MHz mode(1)	2(TOSC)(BRG + 1)	—		
93	THD:STO	STOP condition Hold time	100 kHz mode	2(TOSC)(BRG + 1)	—	ns	
			400 kHz mode	2(TOSC)(BRG + 1)	—		
			1 MHz mode(1)	2(TOSC)(BRG + 1)	—		

Note 1: Maximum pin capacitance = 10 pF for all I²C pins.

FIGURE 27-20: MASTER SSP I²C BUS DATA TIMING

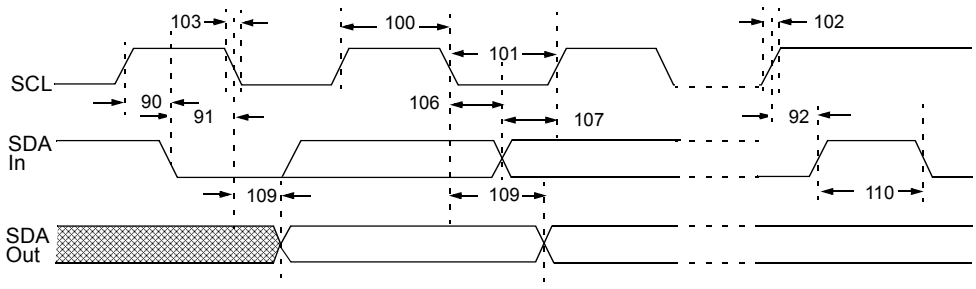

Note: Refer to Figure 27-5 for load conditions.

TABLE 27-20: MASTER SSP I^2C BUS DATA REQUIREMENTS

Param. No.	Symbol	Characteristic		Min	Max	Units	Conditions
100	THIGH	Clock high time	100 kHz mode	2(TOSC)(BRG + 1)	—	ms	
			400 kHz mode	2(TOSC)(BRG + 1)	—	ms	
			1 MHz mode(1)	2(TOSC)(BRG + 1)	—	ms	
101	TLOW	Clock low time	100 kHz mode	2(TOSC)(BRG + 1)	—	ms	
			400 kHz mode	2(TOSC)(BRG + 1)	—	ms	
			1 MHz mode(1)	2(TOSC)(BRG + 1)	—	ms	
102	TR	SDA and SCL rise time	100 kHz mode	—	1000	ns	CB is specified to be from 10 to 400 pF
			400 kHz mode	20 + 0.1 CB	300	ns	
			1 MHz mode(1)	—	300	ns	
103	TF	SDA and SCL fall time	100 kHz mode	—	300	ns	CB is specified to be from 10 to 400 pF
			400 kHz mode	20 + 0.1 CB	300	ns	
			1 MHz mode(1)	—	100	ns	
90	TSU:STA	START condition setup time	100 kHz mode	2(TOSC)(BRG + 1)	—	ms	Only relevant for Repeated START condition
			400 kHz mode	2(TOSC)(BRG + 1)	—	ms	
			1 MHz mode(1)	2(TOSC)(BRG + 1)	—	ms	
91	THD:STA	START condition hold time	100 kHz mode	2(TOSC)(BRG + 1)	—	ms	After this period, the first clock pulse is generated
			400 kHz mode	2(TOSC)(BRG + 1)	—	ms	
			1 MHz mode(1)	2(TOSC)(BRG + 1)	—	ms	
106	THD:DAT	Data input hold time	100 kHz mode	0	—	ns	
			400 kHz mode	0	0.9	ms	
107	TSU:DAT	Data input setup time	100 kHz mode	250	—	ns	**(Note 2)**
			400 kHz mode	100	—	ns	
92	TSU:STO	STOP condition setup time	100 kHz mode	2(TOSC)(BRG + 1)	—	ms	
			400 kHz mode	2(TOSC)(BRG + 1)	—	ms	
			1 MHz mode(1)	2(TOSC)(BRG + 1)	—	ms	
109	TAA	Output valid from clock	100 kHz mode	—	3500	ns	
			400 kHz mode	—	1000	ns	
			1 MHz mode(1)	—	—	ns	
110	TBUF	Bus free time	100 kHz mode	4.7	—	ms	Time the bus must be free before a new transmission can start
			400 kHz mode	1.3	—	ms	
D102	CB	Bus capacitive loading		—	400	pF	

Note 1: Maximum pin capacitance = 10 pF for all I^2C pins.

2: A Fast mode I^2C bus device can be used in a Standard mode I^2C bus system, but parameter #107 $\geq$ 250 ns must then be met. This will automatically be the case if the device does not stretch the LOW period of the SCL signal. If such a device does stretch the LOW period of the SCL signal, it must output the next data bit to the SDA line. Before the SCL line is released, parameter #102 + parameter #107 = 1000 + 250 = 1250 ns (for 100 kHz mode).

© 2003 Microchip Technology Inc.

FIGURE 27-21: USART SYNCHRONOUS TRANSMISSION (MASTER/SLAVE) TIMING

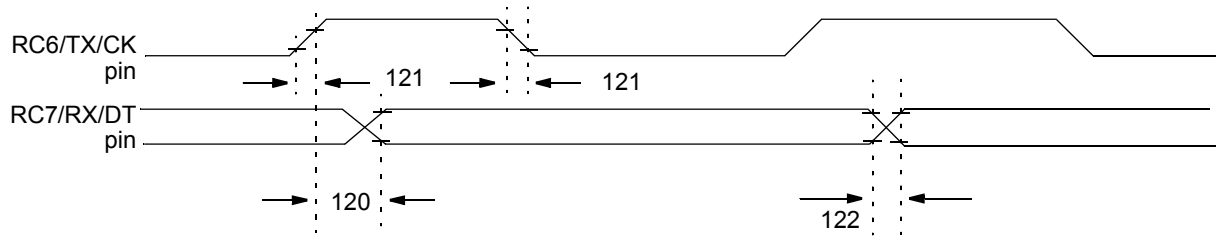

Note: Refer to Figure 27-5 for load conditions.

TABLE 27-21: USART SYNCHRONOUS TRANSMISSION REQUIREMENTS

Param No.	Symbol	Characteristic		Min	Max	Units	Conditions
120	TckH2dtV	SYNC XMIT (Master & Slave) Clock high to data-out valid	PIC18**F**XX8	—	50	ns	
			PIC18**LF**XX8	—	150	ns	
121	Tckrf	Clock out rise time and fall time (Master mode)	PIC18**F**XX8	—	25	ns	
			PIC18**LF**XX8	—	60	ns	
122	Tdtrf	Data-out rise time and fall time	PIC18**F**XX8	—	25	ns	
			PIC18**LF**XX8	—	60	ns	

FIGURE 27-22: USART SYNCHRONOUS RECEIVE (MASTER/SLAVE) TIMING

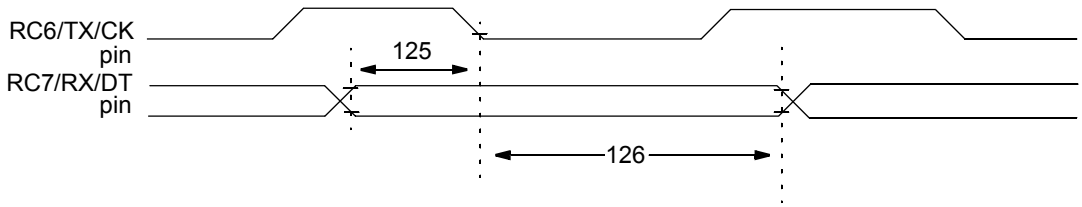

Note: Refer to Figure 27-5 for load conditions.

TABLE 27-22: USART SYNCHRONOUS RECEIVE REQUIREMENTS

Param No.	Symbol	Characteristic	Min	Max	Units	Conditions
125	TdtV2ckl	SYNC RCV (Master & Slave) Data-hold before CK ↓ (DT hold time)	10	—	ns	
126	TckL2dtl	Data-hold after CK ↓ (DT hold time)	15	—	ns	

TABLE 27-23: A/D CONVERTER CHARACTERISTICS: PIC18FXX8 (INDUSTRIAL, EXTENDED) PIC18LFXX8 (INDUSTRIAL)

Param No.	Symbol	Characteristic		Min	Typ	Max	Units	Conditions
A01	NR	Resolution		—	—	10	bit	VREF = VDD ≥ 3.0V
A03	EIL	Integral linearity error		—	—	<±1	LSb	VREF = VDD ≥ 3.0V
A04	EDL	Differential linearity error		—	—	<±1	LSb	VREF = VDD ≥ 3.0V
A05	EFS	Full scale error		—	—	<±1	LSb	VREF = VDD ≥ 3.0V
A06	EOFF	Offset error		—	—	<±1.5	LSb	VREF = VDD ≥ 3.0V
A10	—	Monotonicity(3)		guaranteed			—	VSS ≤ VAIN ≤ VREF
A20	VREF	Reference voltage (VREFH – VREFL)		0V	—	—	V	
A20A				3V	—	—	V	For 10-bit resolution
A21	VREFH	Reference voltage High		VSS	—	VDD + 0.3V	V	
A22	VREFL	Reference voltage Low		VSS – 0.3V	—	VDD	V	
A25	VAIN	Analog input voltage		VSS – 0.3V	—	VREF + 0.3V	V	
A30	ZAIN	Recommended impedance of analog voltage source		—	—	10.0	kΩ	
A40	IAD	A/D conversion current (VDD)	PIC18**F**XX8	—	180	—	μA	Average current consumption when A/D is on **(Note 1)**
			PIC18**LF**XX8	—	90	—	μA	
A50	IREF	VREF input current **(Note 2)**		10	—	1000	μA	During VAIN acquisition. Based on differential of VHOLD to VAIN. To charge CHOLD.
				—	—	10	μA	During A/D conversion cycle.

Note 1: When A/D is off, it will not consume any current other than minor leakage current. The power-down current spec includes any such leakage from the A/D module.
VREF current is from RA2/AN2/VREF- and RA3/AN3/VREF+ pins or VDD and VSS pins, whichever is selected as reference input.

2: VSS ≤ VAIN ≤ VREF

3: The A/D conversion result never decreases with an increase in the input voltage, and has no missing codes.

© 2003 Microchip Technology Inc.

FIGURE 27-23: A/D CONVERSION TIMING

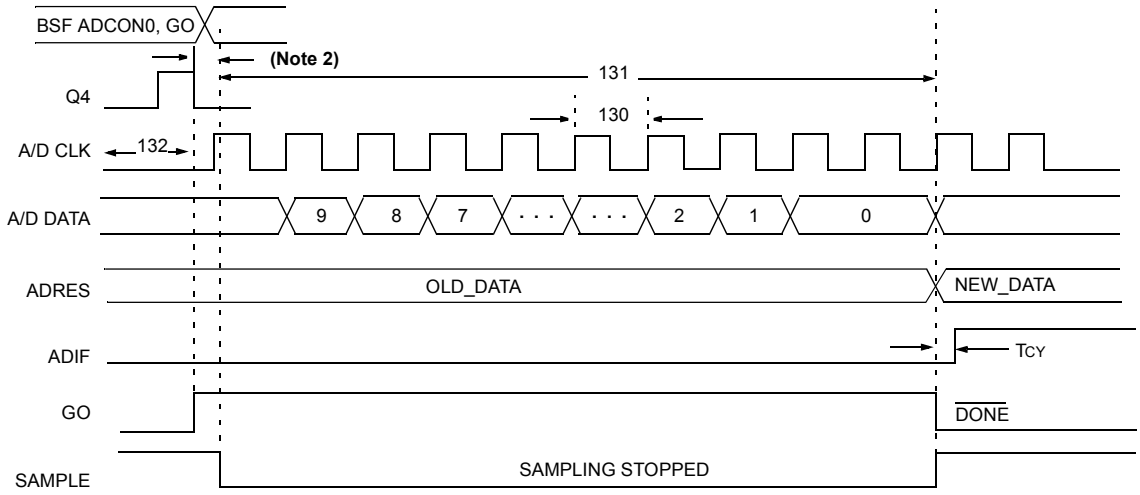

Note 1: If the A/D clock source is selected as RC, a time of TCY is added before the A/D clock starts. This allows the SLEEP instruction to be executed.
2: This is a minimal RC delay (typically 100 ns), which also disconnects the holding capacitor from the analog input.

TABLE 27-24: A/D CONVERSION REQUIREMENTS

Param No.	Symbol	Characteristic		Min	Max	Units	Conditions
130	TAD	A/D clock period	PIC18**F**XX8	1.6	20**(5)**	µs	TOSC based, VREF ≥ 3.0V
			PIC18**LF**XX8	3.0	20**(5)**	µs	TOSC based, VREF full range
			PIC18**F**XX8	2.0	6.0	µs	A/D RC mode
			PIC18**LF**XX8	3.0	9.0	µs	A/D RC mode
131	TCNV	Conversion time (not including acquisition time) **(Note 1)**		11	12	TAD	
132	TACQ	Acquisition time **(Note 3)**		15 10	— —	µs µs	-40°C ≤ Temp ≤ +125°C 0°C ≤ Temp ≤ +125°C
135	TSWC	Switching time from convert → sample		—	**(Note 4)**		
136	TAMP	Amplifier settling time **(Note 2)**		1	—	µs	This may be used if the "new" input voltage has not changed by more than 1 LSb (i.e., 5 mV @ 5.12V) from the last sampled voltage (as stated on CHOLD).

Note 1: ADRES register may be read on the following TCY cycle.
2: See Section 20.0 for minimum conditions when input voltage has changed more than 1 LSb.
3: The time for the holding capacitor to acquire the "New" input voltage when the voltage changes full scale after the conversion (AVDD to AVSS, or AVSS to AVDD). The source impedance (*RS*) on the input channels is 50Ω.
4: On the next Q4 cycle of the device clock.
5: The time of the A/D clock period is dependent on the device frequency and the TAD clock divider.

NOTES:

© 2003 Microchip Technology Inc.

28.0 DC AND AC CHARACTERISTICS GRAPHS AND TABLES

Note: The graphs and tables provided following this note are a statistical summary based on a limited number of samples and are provided for informational purposes only. The performance characteristics listed herein are not tested or guaranteed. In some graphs or tables, the data presented may be outside the specified operating range (e.g., outside specified power supply range) and therefore, outside the warranted range.

"Typical" represents the mean of the distribution at 25°C. "Maximum" or "minimum" represents (mean + 3σ) or (mean - 3σ) respectively, where σ is a standard deviation, over the whole temperature range.

FIGURE 28-1: TYPICAL IDD vs. FOSC OVER VDD (HS MODE)

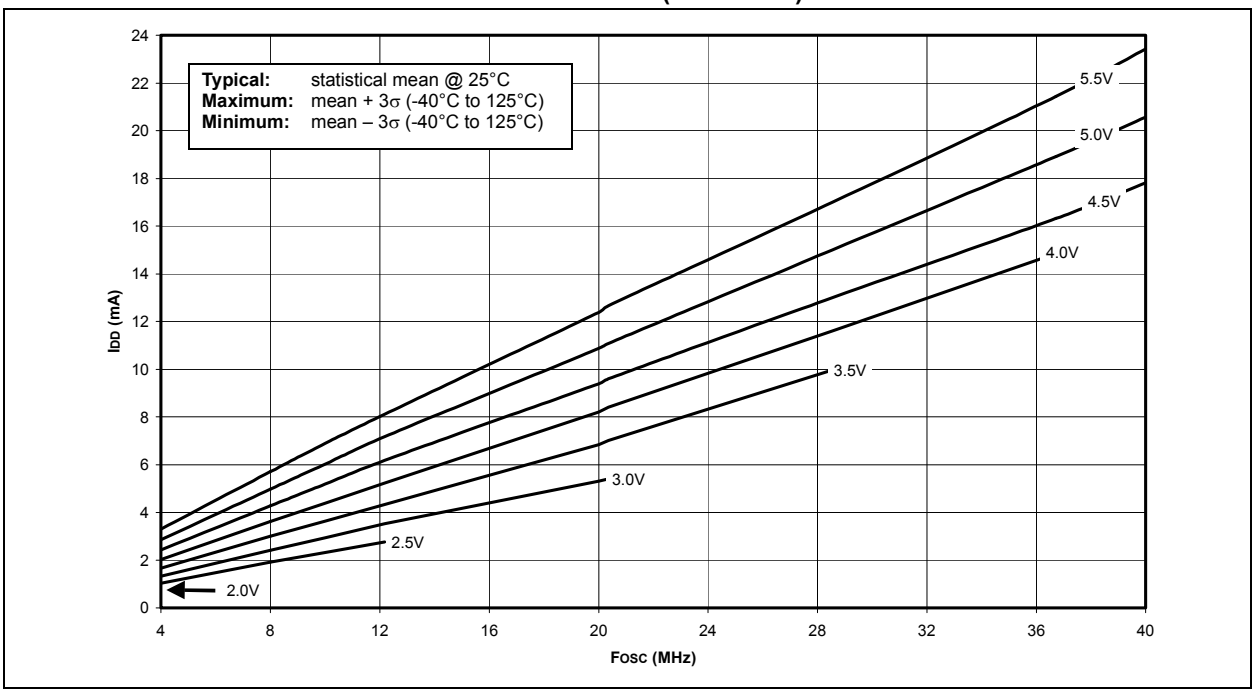

FIGURE 28-2: MAXIMUM IDD vs. FOSC OVER VDD (HS MODE)

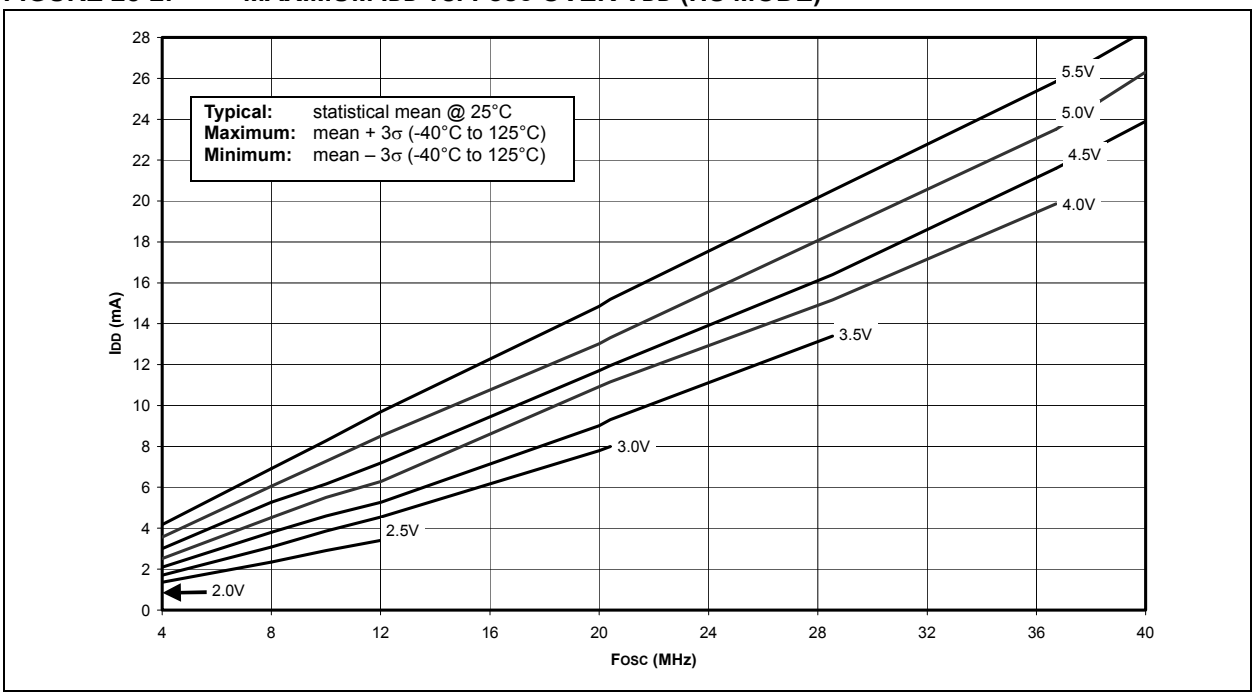

FIGURE 28-3: TYPICAL IDD vs. FOSC OVER VDD (HS/PLL MODE)

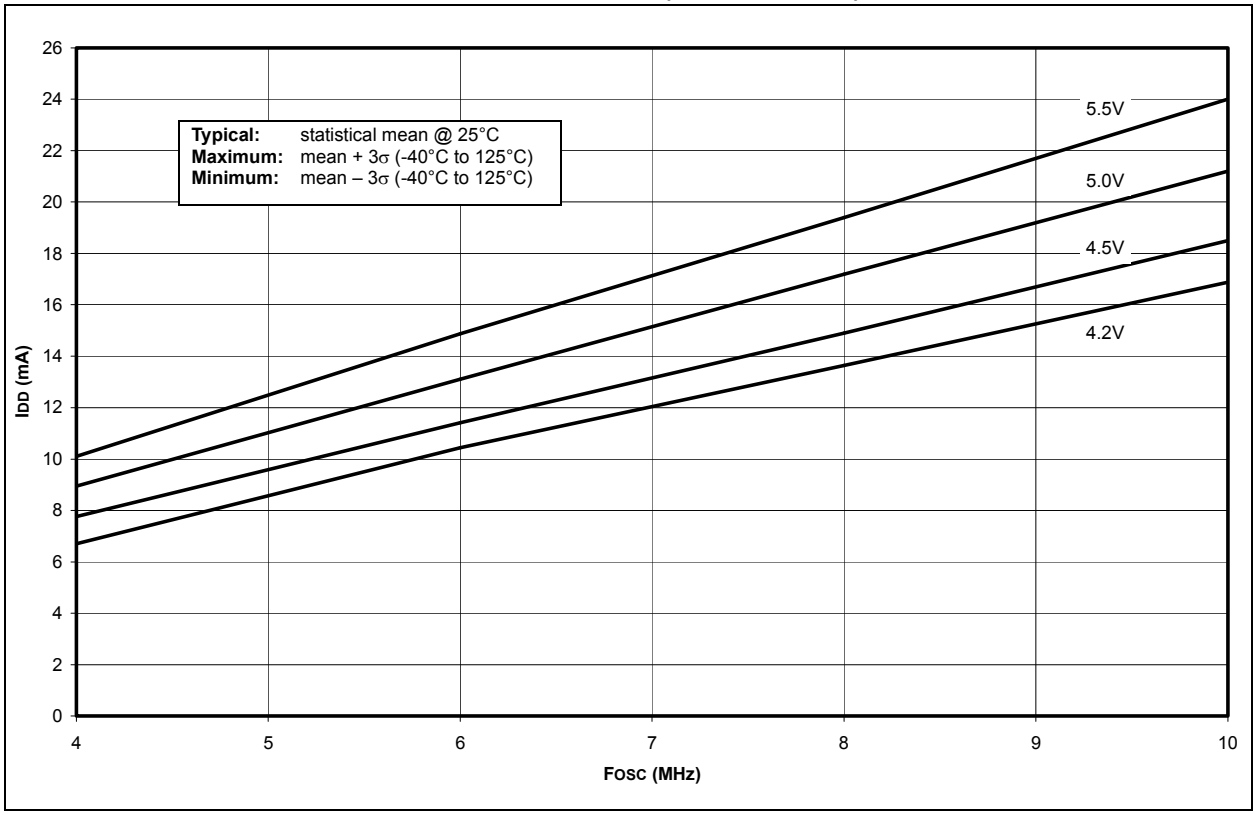

FIGURE 28-4: MAXIMUM IDD vs. FOSC OVER VDD (HS/PLL MODE)

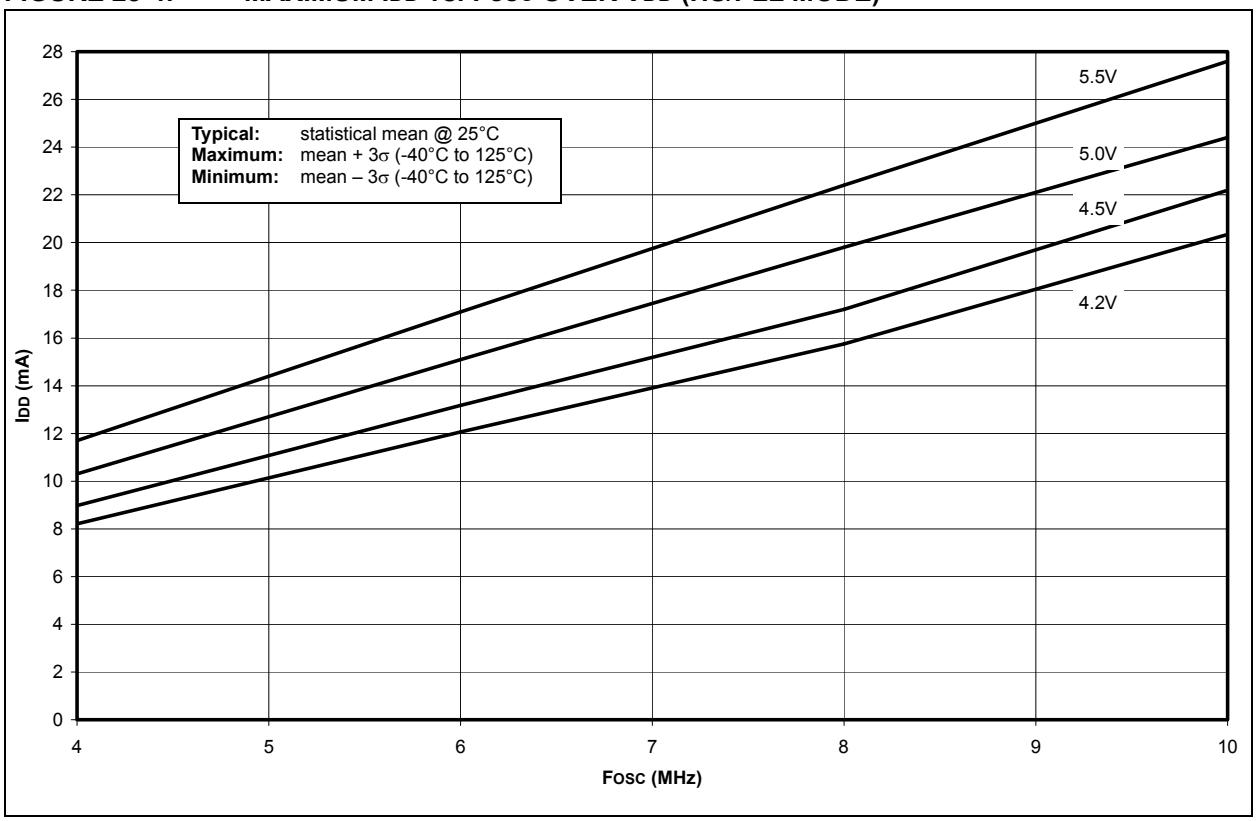

© 2003 Microchip Technology Inc.

FIGURE 28-5: TYPICAL IDD vs. FOSC OVER VDD (XT MODE)

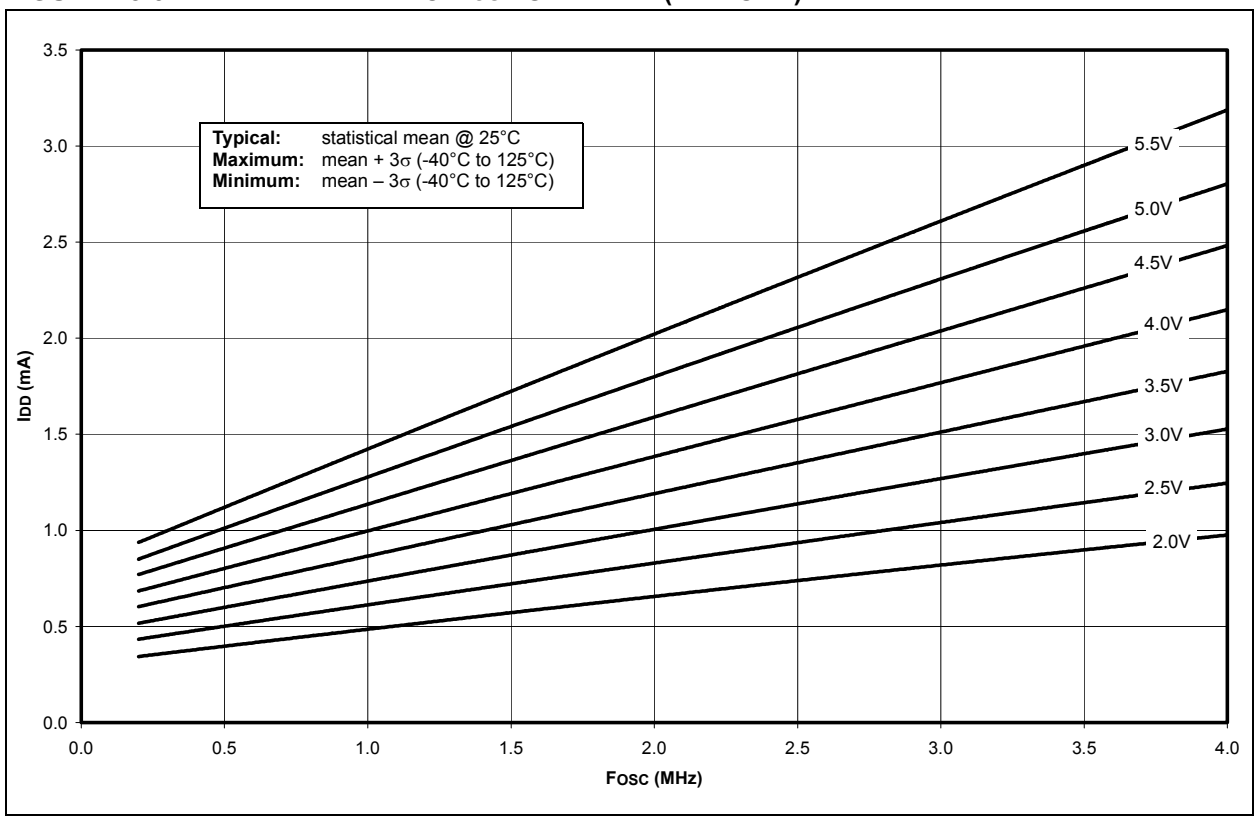

FIGURE 28-6: MAXIMUM IDD vs. FOSC OVER VDD (XT MODE)

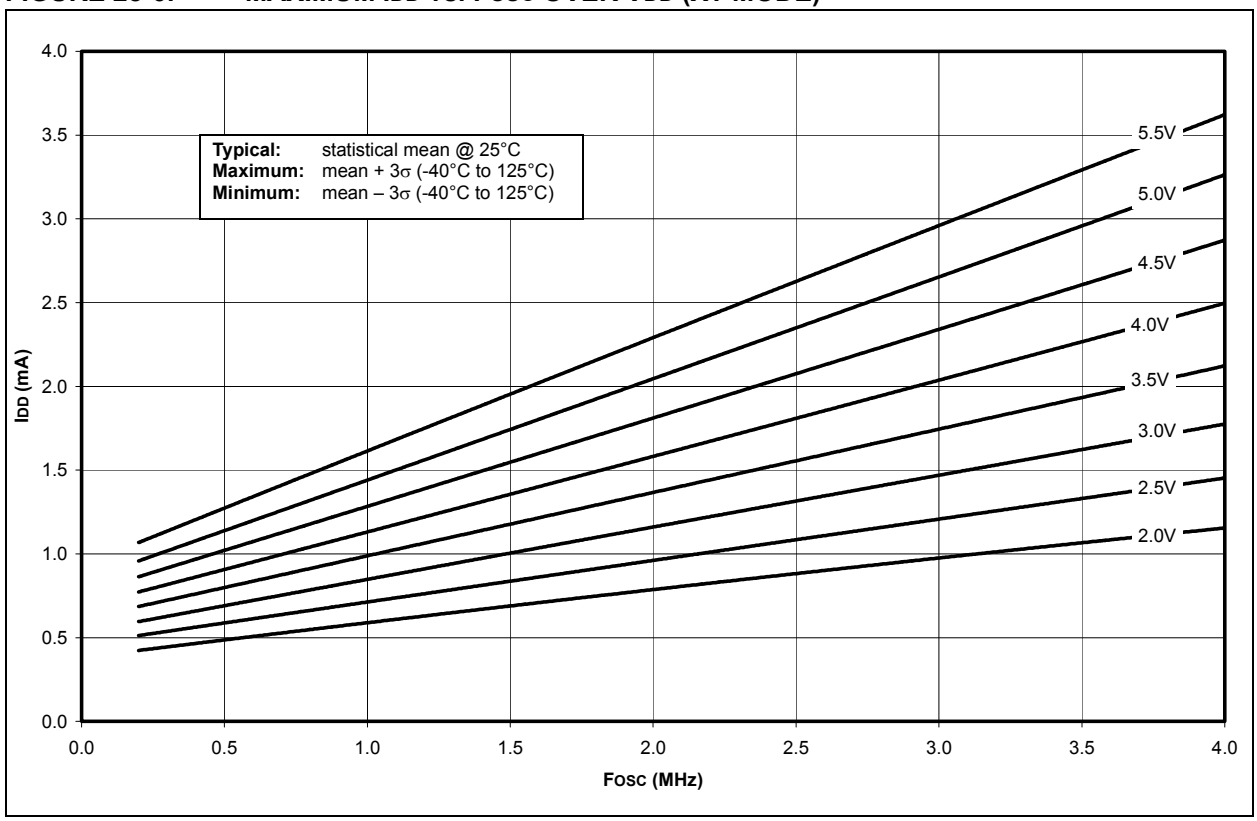

FIGURE 28-7: TYPICAL IDD vs. FOSC OVER VDD (LP MODE)

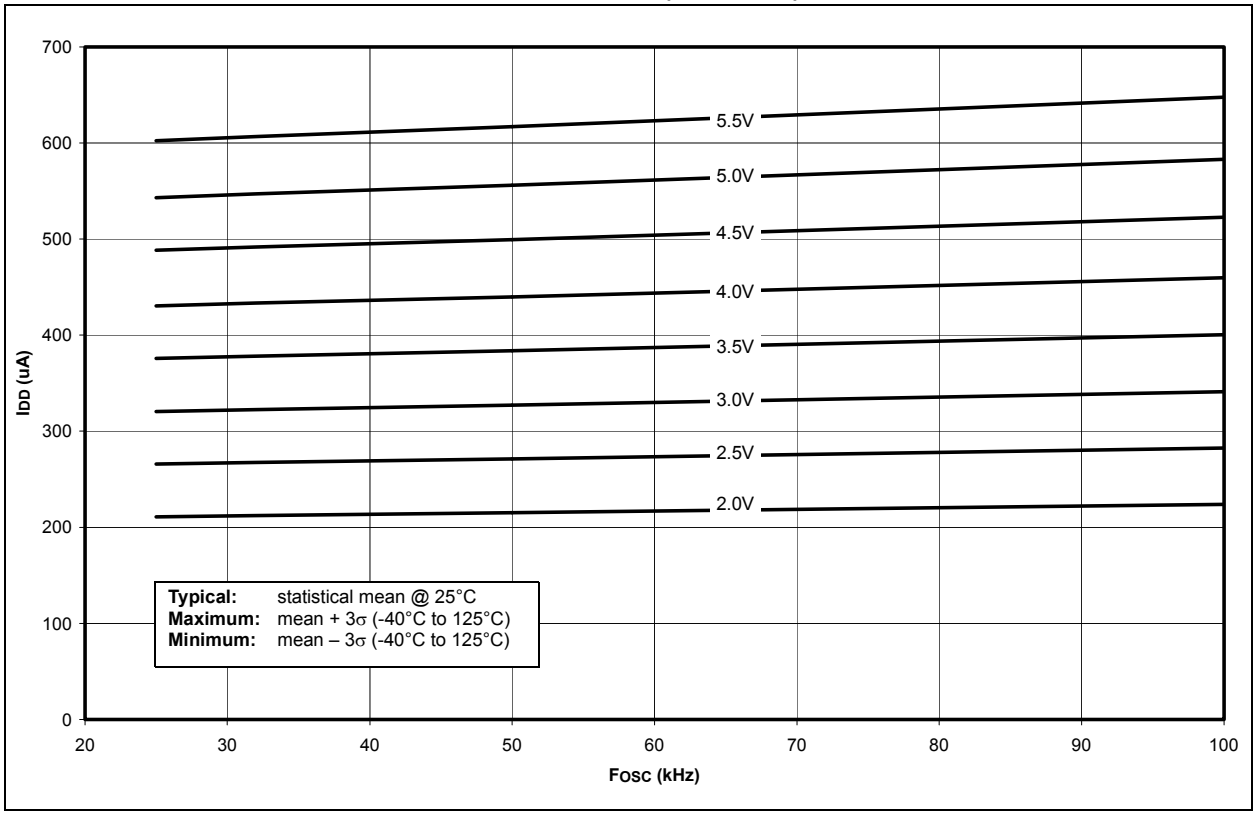

FIGURE 28-8: MAXIMUM IDD vs. FOSC OVER VDD (LP MODE)

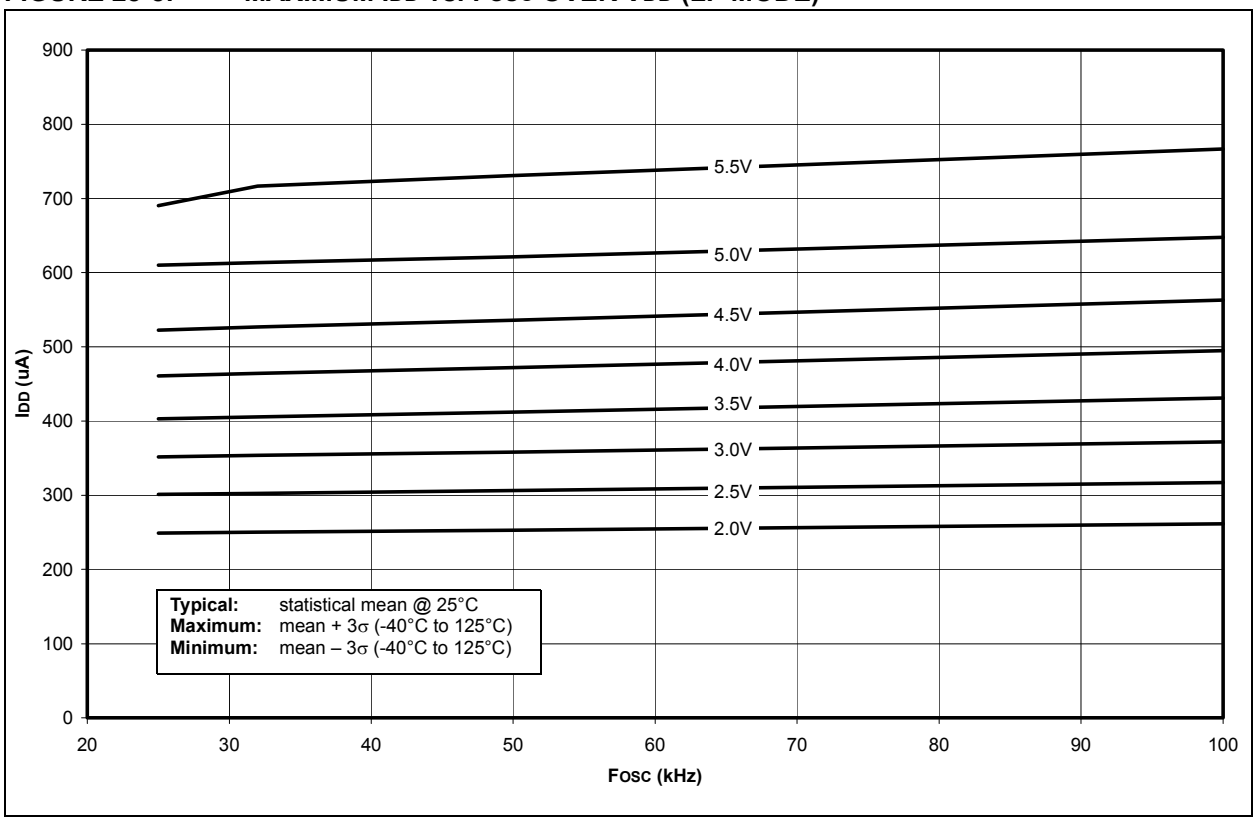

© 2003 Microchip Technology Inc.

FIGURE 28-9: TYPICAL IDD vs. FOSC OVER VDD (EC MODE)

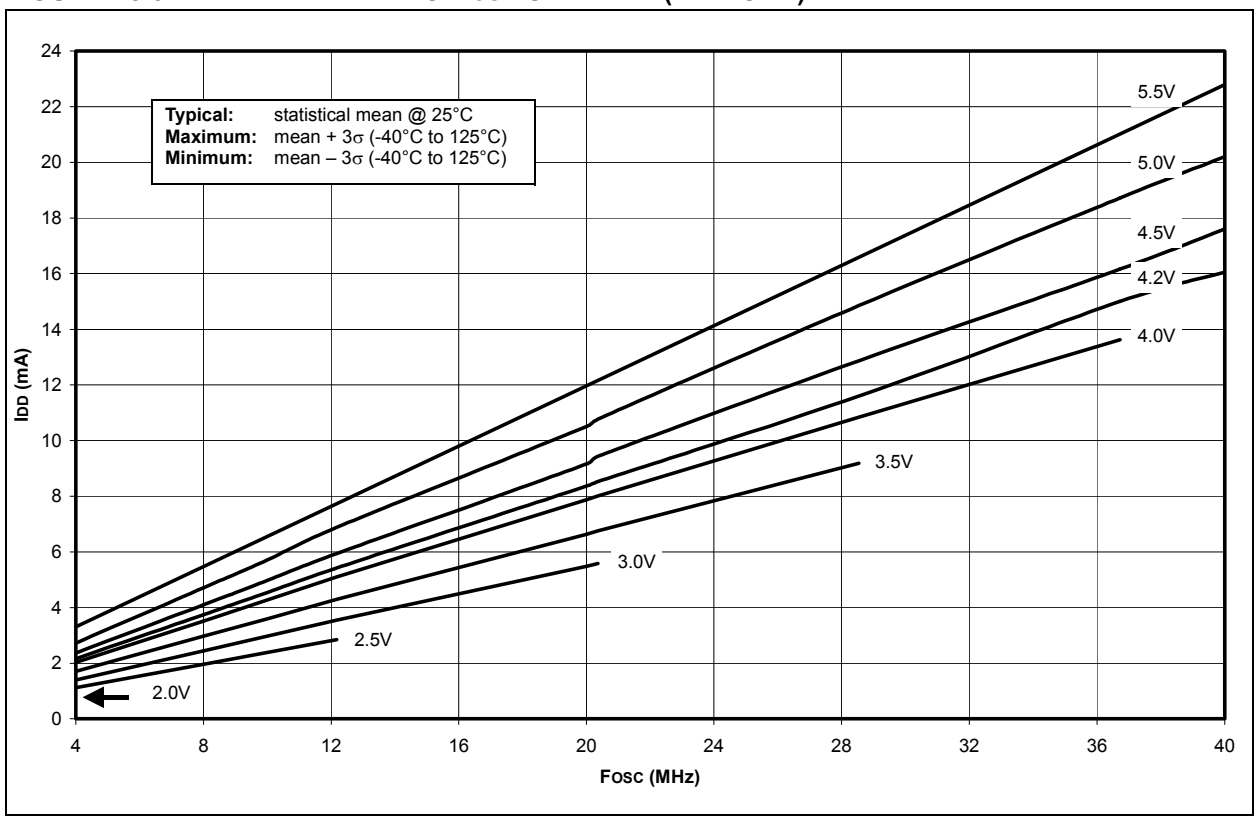

FIGURE 28-10: MAXIMUM IDD vs. FOSC OVER VDD (EC MODE)

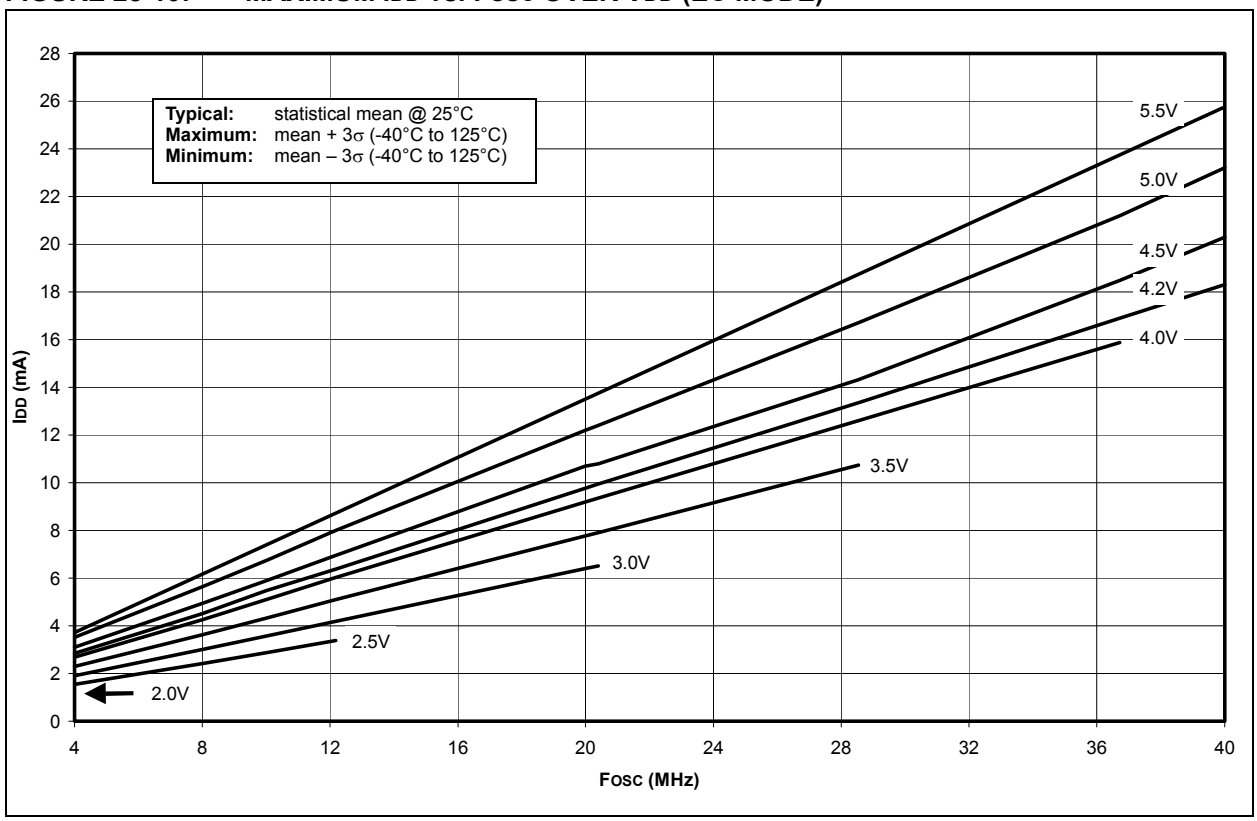

FIGURE 28-11: TYPICAL AND MAXIMUM IDD vs. VDD (TIMER1 AS MAIN OSCILLATOR 32.768 kHz, C1 AND C2 = 47 pF)

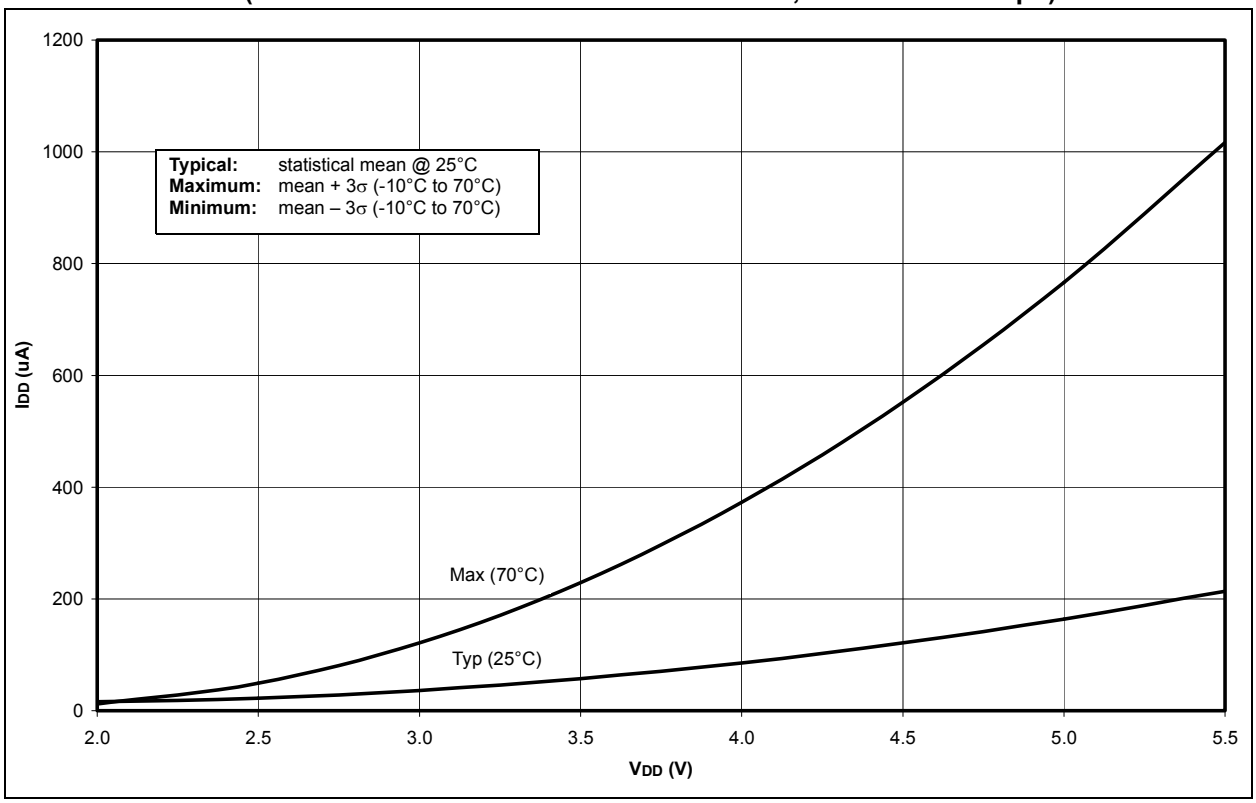

FIGURE 28-12: AVERAGE FOSC vs. VDD FOR VARIOUS VALUES OF R (RC MODE, C = 20 pF, +25°C)

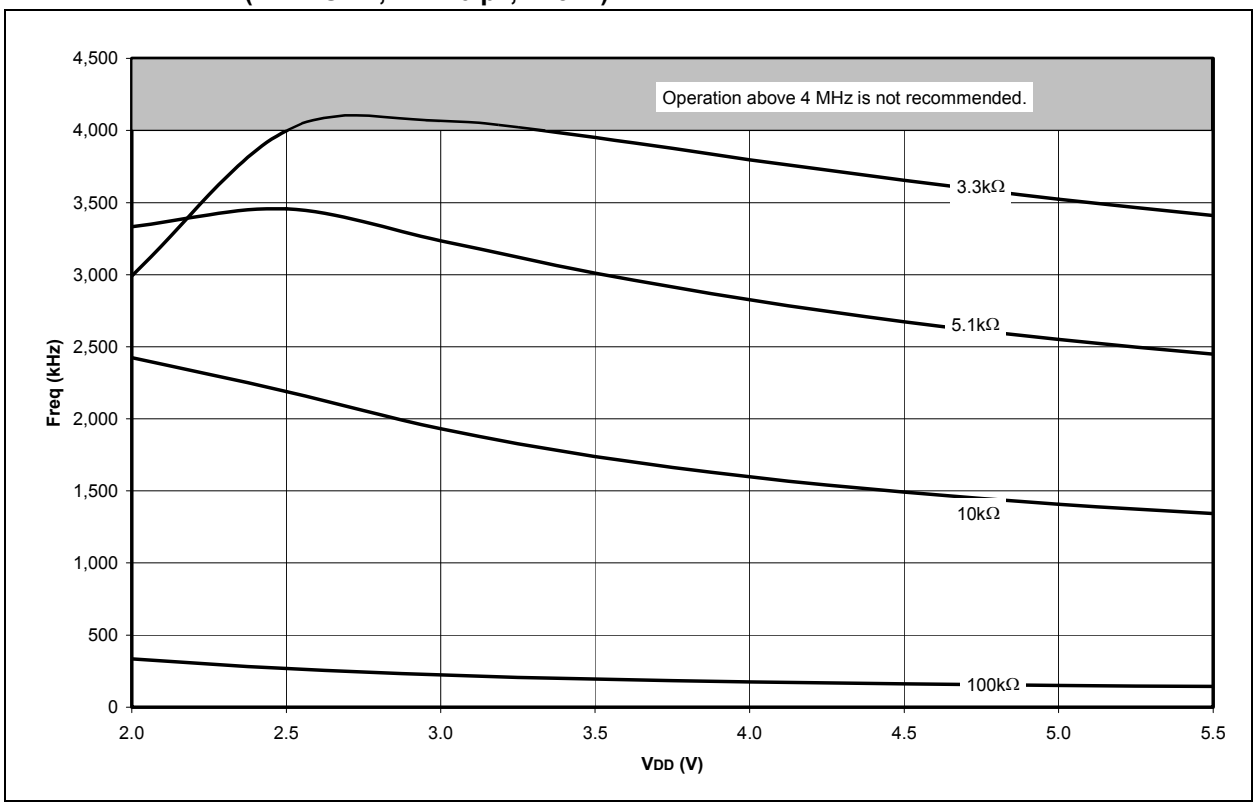

© 2003 Microchip Technology Inc.

FIGURE 28-13: AVERAGE FOSC vs. VDD FOR VARIOUS VALUES OF R (RC MODE, C = 100 pF, +25°C)

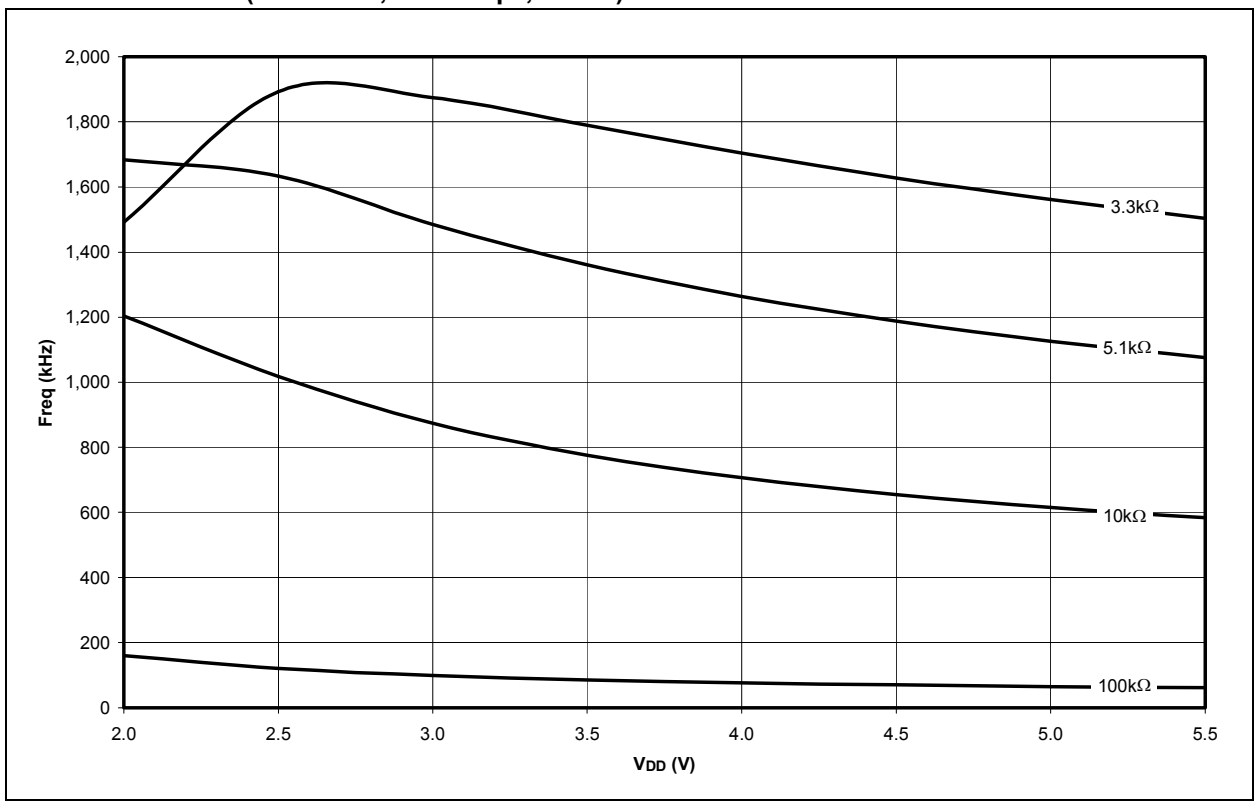

FIGURE 28-14: AVERAGE FOSC vs. VDD FOR VARIOUS VALUES OF R (RC MODE, C = 300 pF, +25°C)

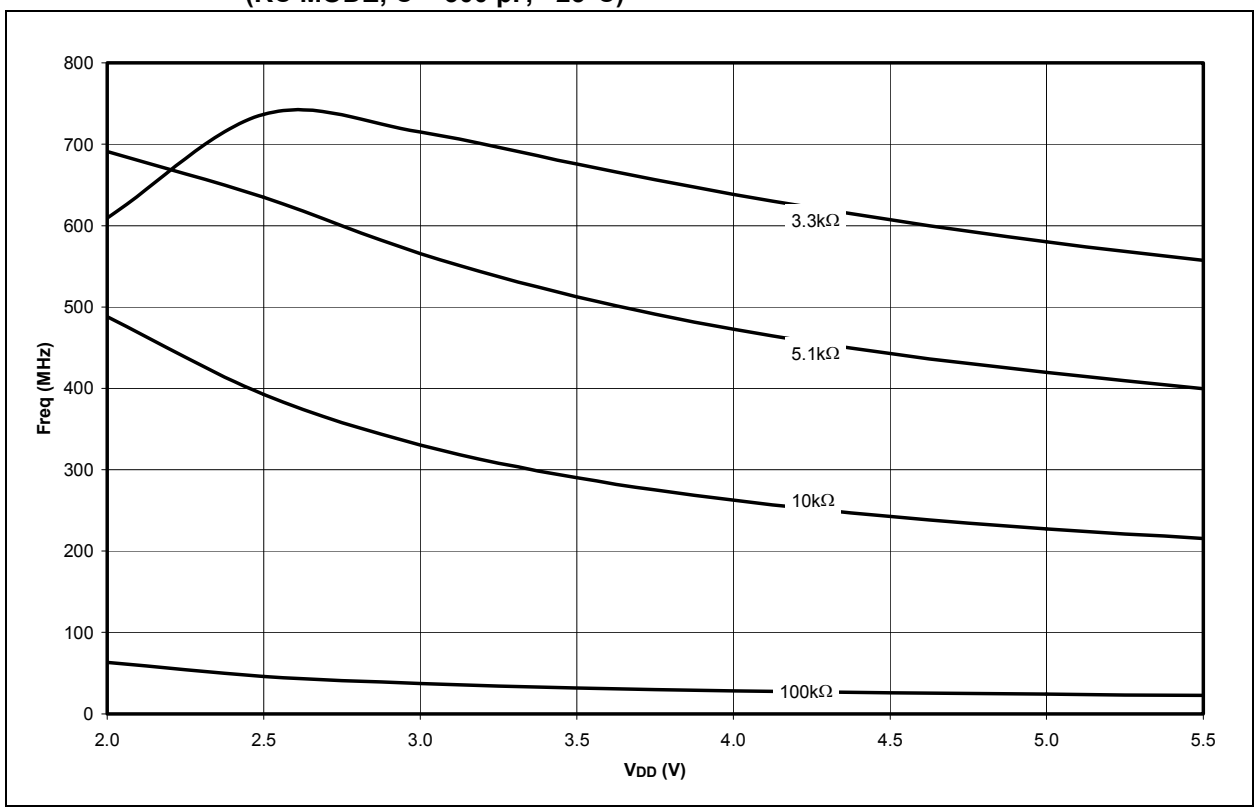

FIGURE 28-15: I_{PD} vs. V_{DD}, -40°C TO +125°C (SLEEP MODE, ALL PERIPHERALS DISABLED)

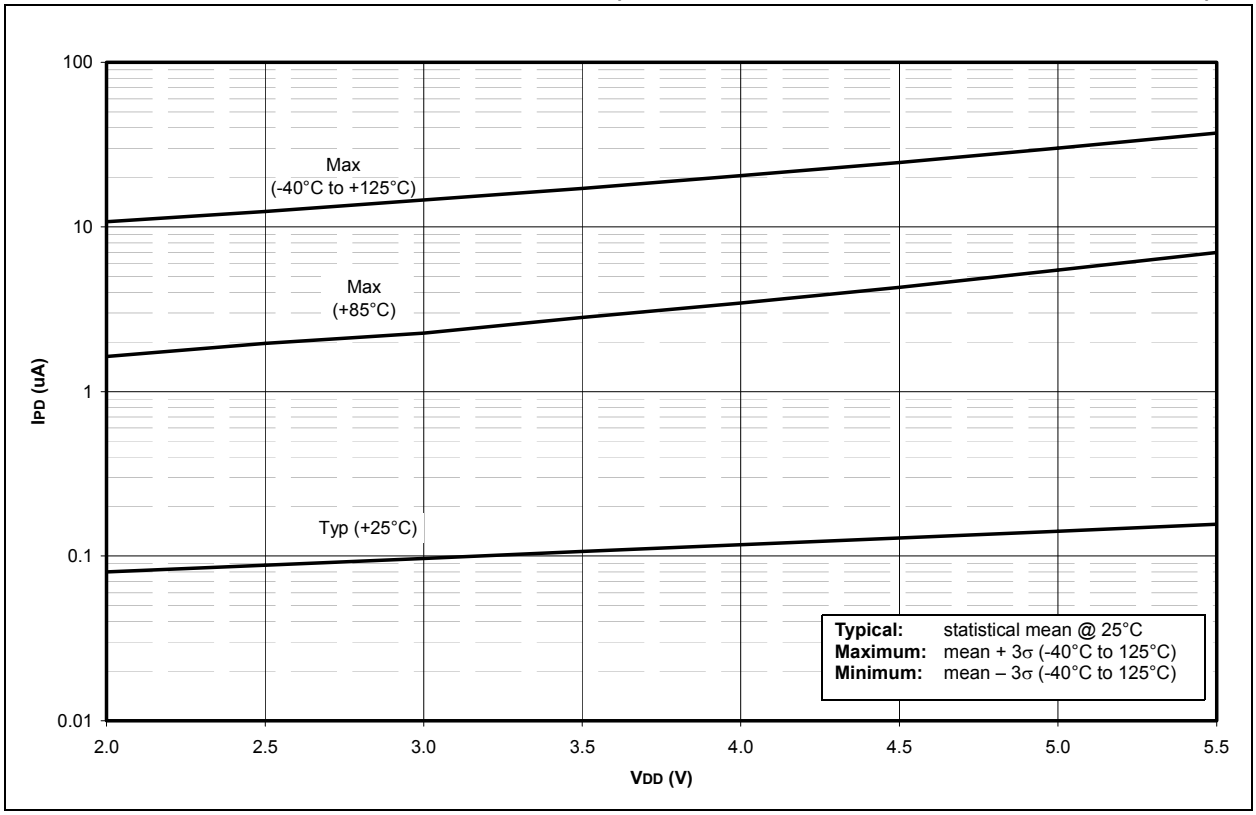

FIGURE 28-16: ΔI_{BOR} vs. V_{DD} OVER TEMPERATURE (BOR ENABLED, V_{BOR} = 2.00 - 2.16V)

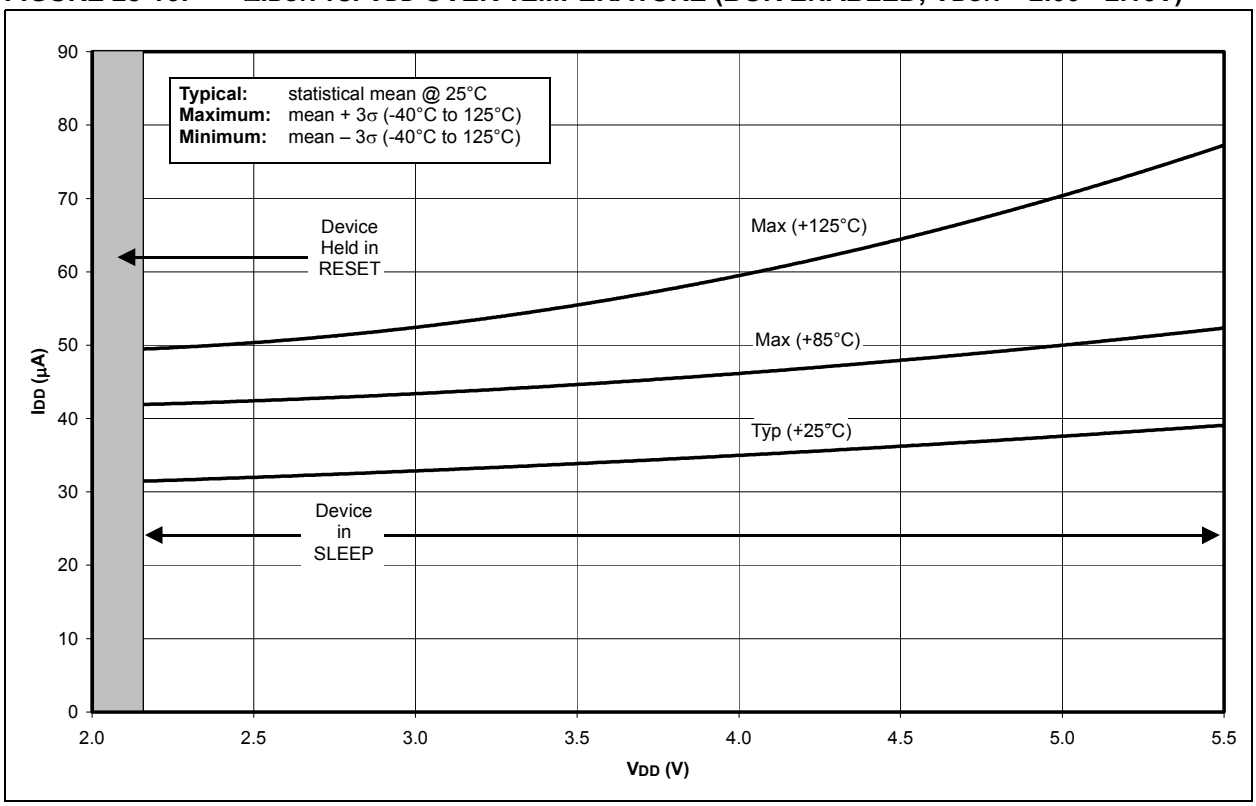

© 2003 Microchip Technology Inc.

FIGURE 28-17: TYPICAL AND MAXIMUM ΔITMR1 vs. VDD OVER TEMPERATURE (-10°C TO +70°C, TIMER1 WITH OSCILLATOR, XTAL = 32 kHz, C1 AND C2 = 47 pF)

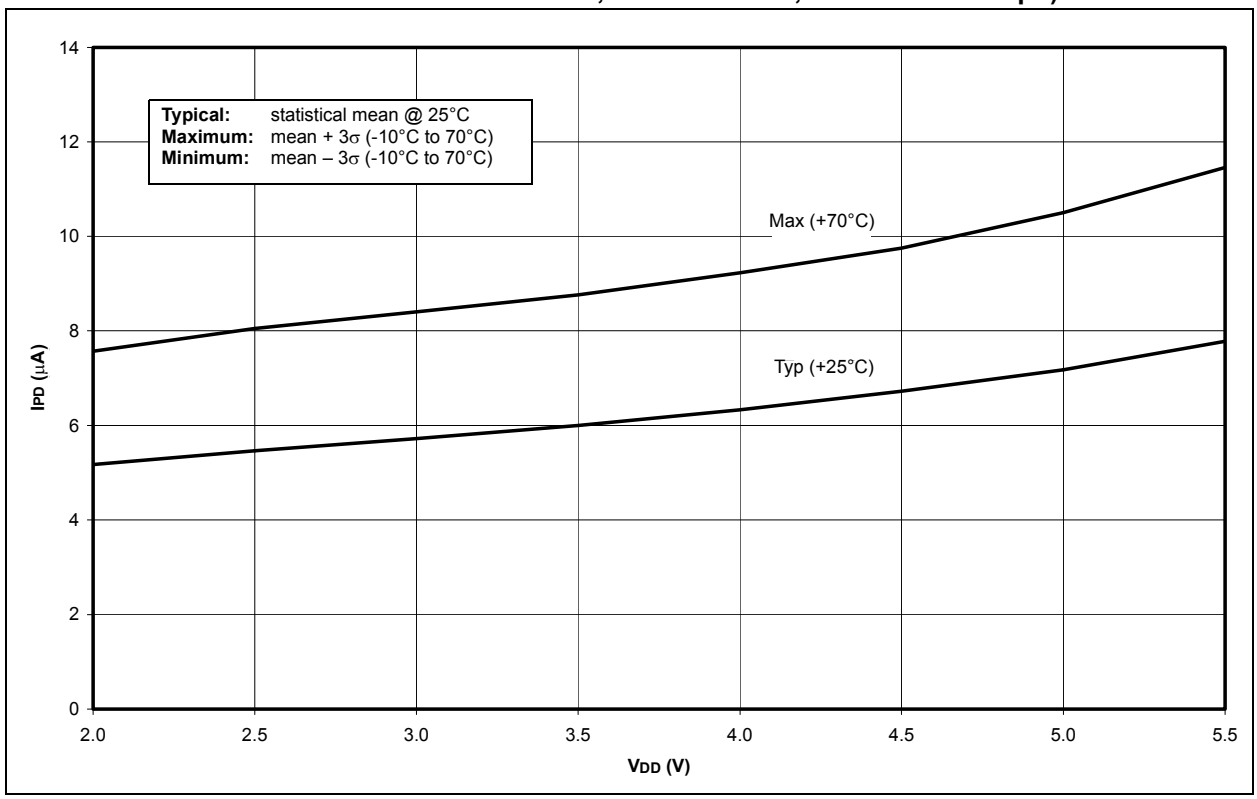

FIGURE 28-18: TYPICAL AND MAXIMUM ΔIWDT vs. VDD OVER TEMPERATURE (WDT ENABLED)

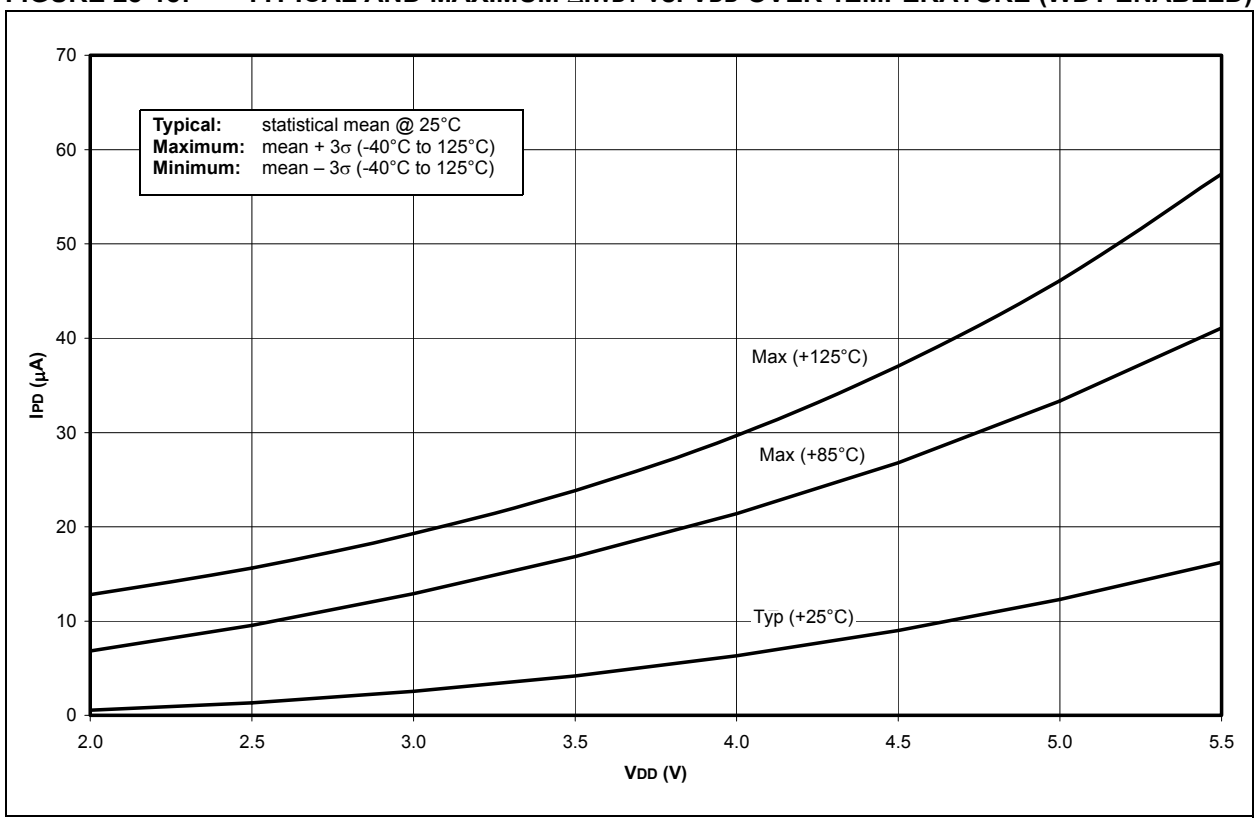

FIGURE 28-19: TYPICAL, MINIMUM AND MAXIMUM WDT PERIOD vs. VDD (-40°C TO +125°C)

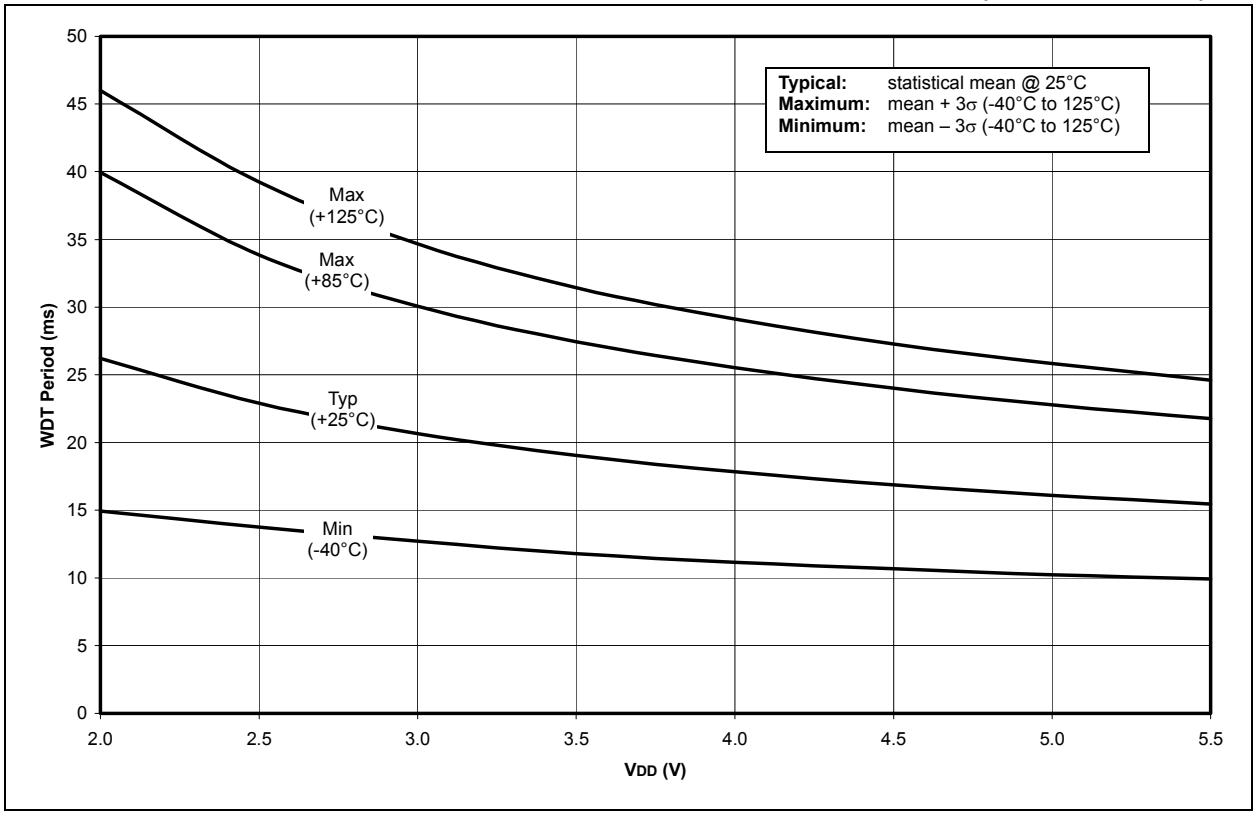

FIGURE 28-20: ΔILVD vs. VDD OVER TEMPERATURE (LVD ENABLED, VLVD = 4.5 - 4.78V)

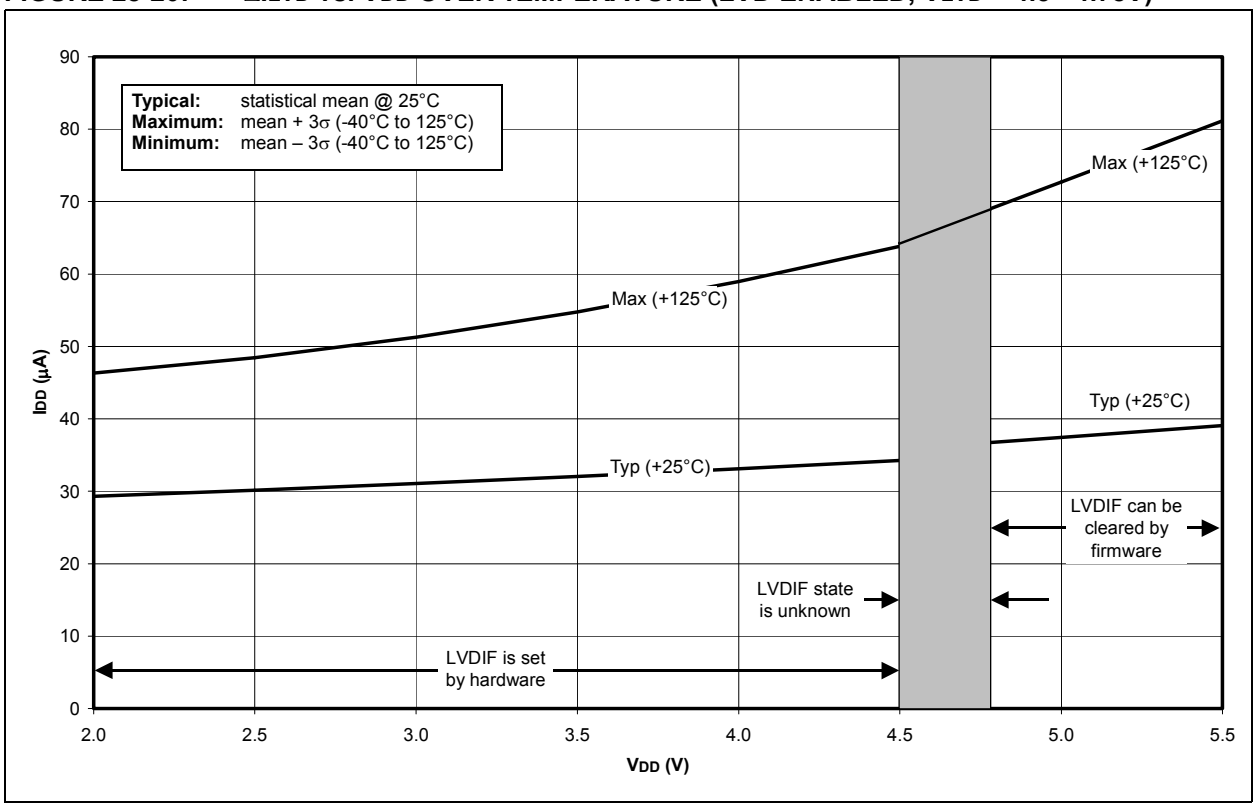

© 2003 Microchip Technology Inc.

FIGURE 28-21: TYPICAL, MINIMUM AND MAXIMUM V_{OH} vs. I_{OH} (V_{DD} = 5V, -40°C TO +125°C)

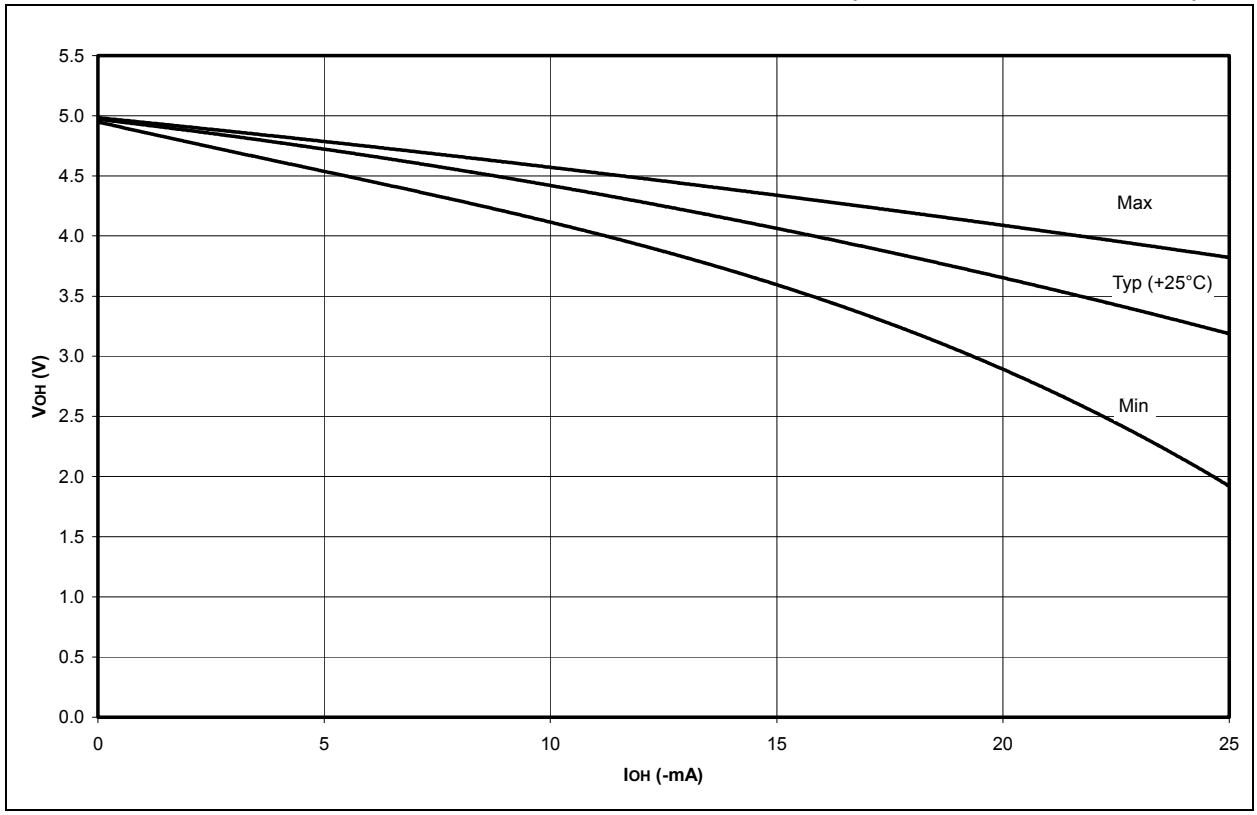

FIGURE 28-22: TYPICAL, MINIMUM AND MAXIMUM V_{OH} vs. I_{OH} (V_{DD} = 3V, -40°C TO +125°C)

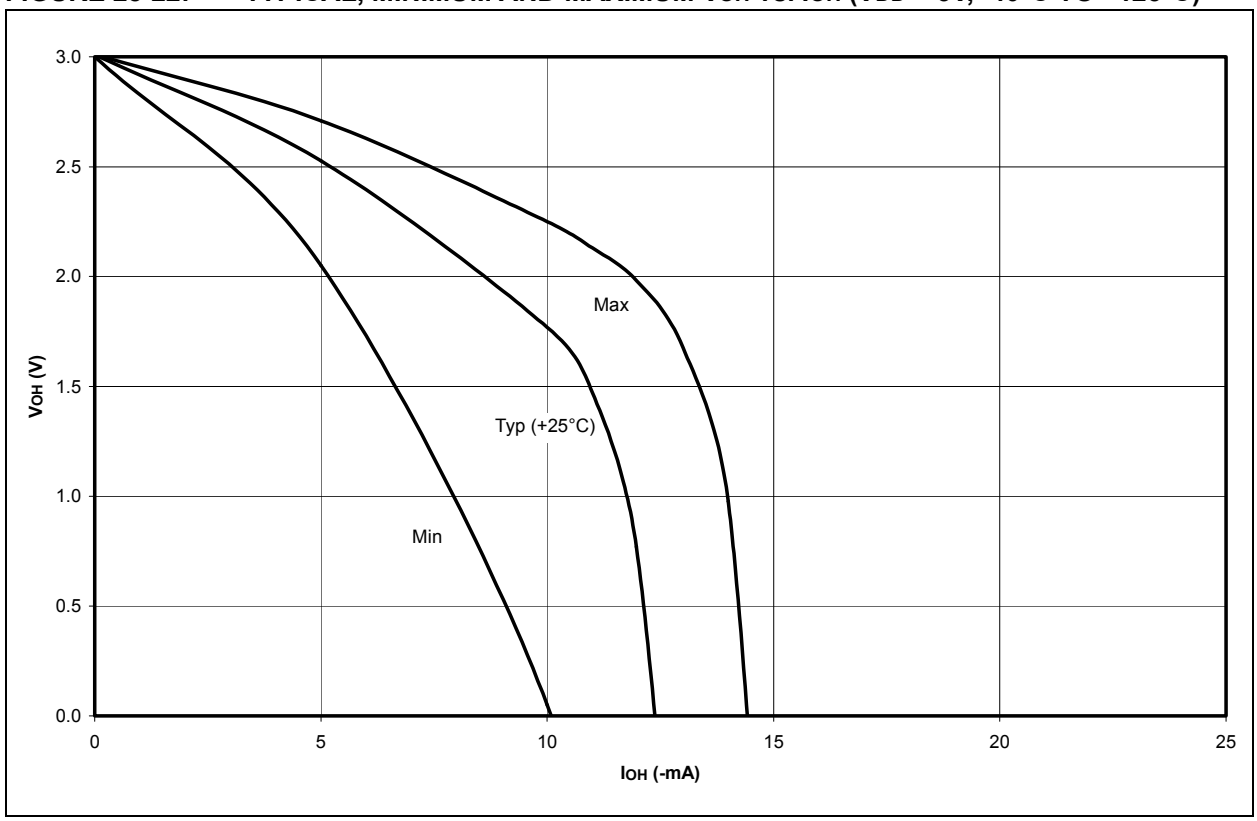

FIGURE 28-23: TYPICAL AND MAXIMUM VOL vs. IOL (VDD = 5V, -40°C TO +125°C)

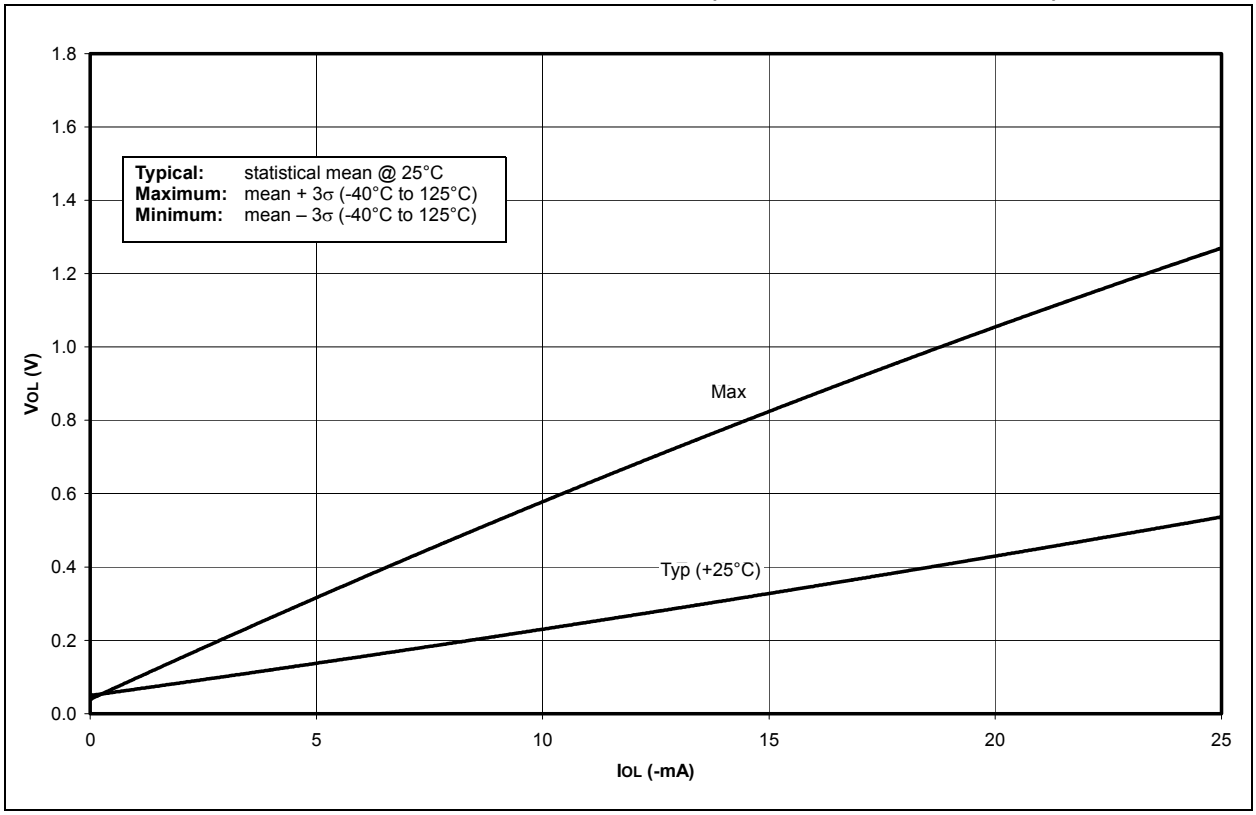

FIGURE 28-24: TYPICAL AND MAXIMUM VOL vs. IOL (VDD = 3V, -40°C TO +125°C)

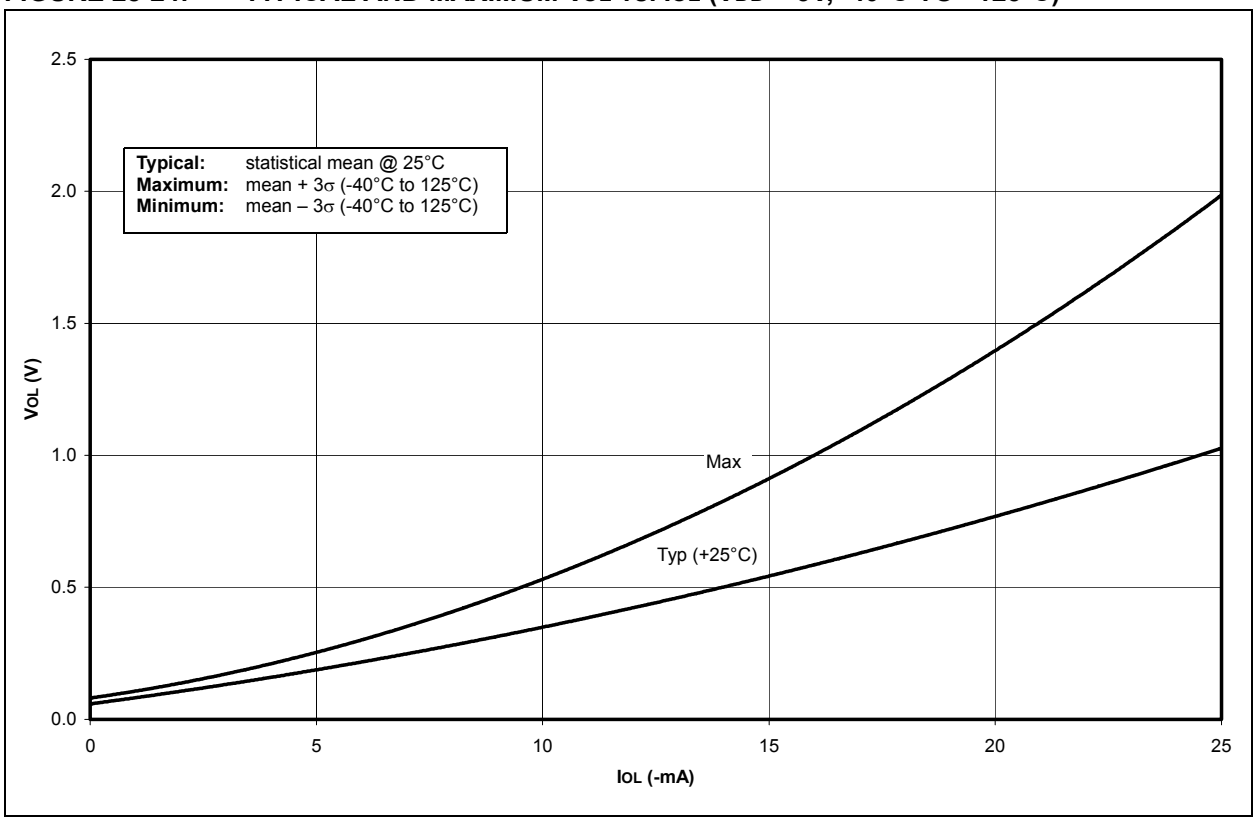

© 2003 Microchip Technology Inc.

FIGURE 28-25: MINIMUM AND MAXIMUM VIN vs. VDD (ST INPUT, -40°C TO +125°C)

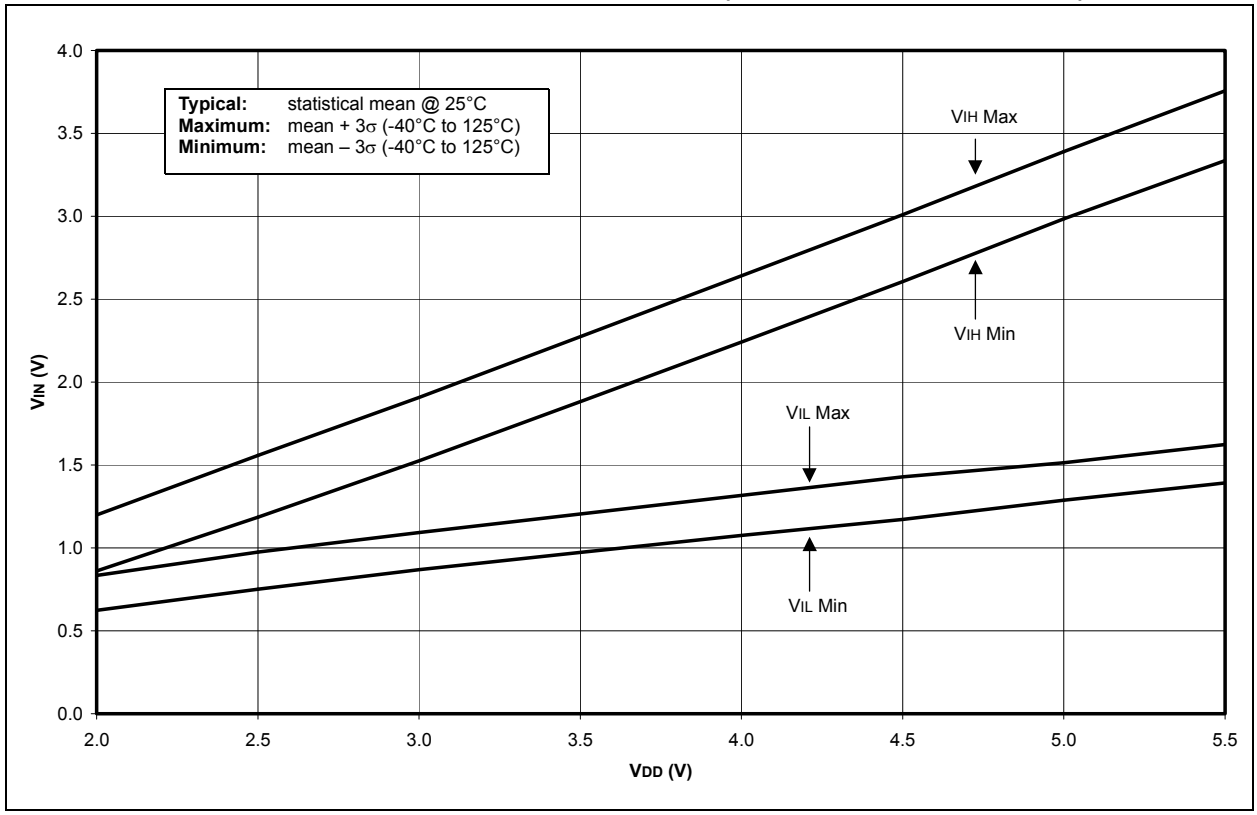

FIGURE 28-26: MINIMUM AND MAXIMUM VIN vs. VDD (TTL INPUT, -40°C TO +125°C)

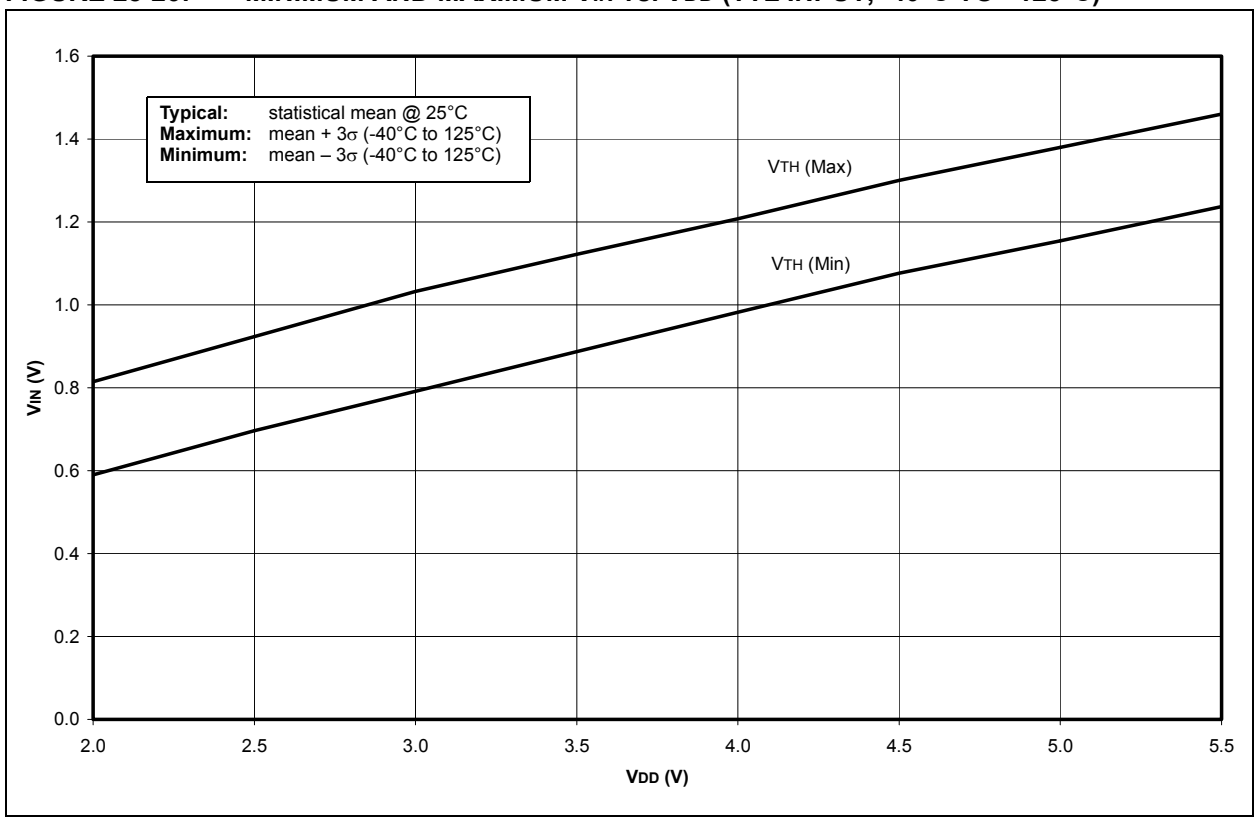

FIGURE 28-27: MINIMUM AND MAXIMUM VIN vs. VDD (I2C INPUT, -40°C TO +125°C)

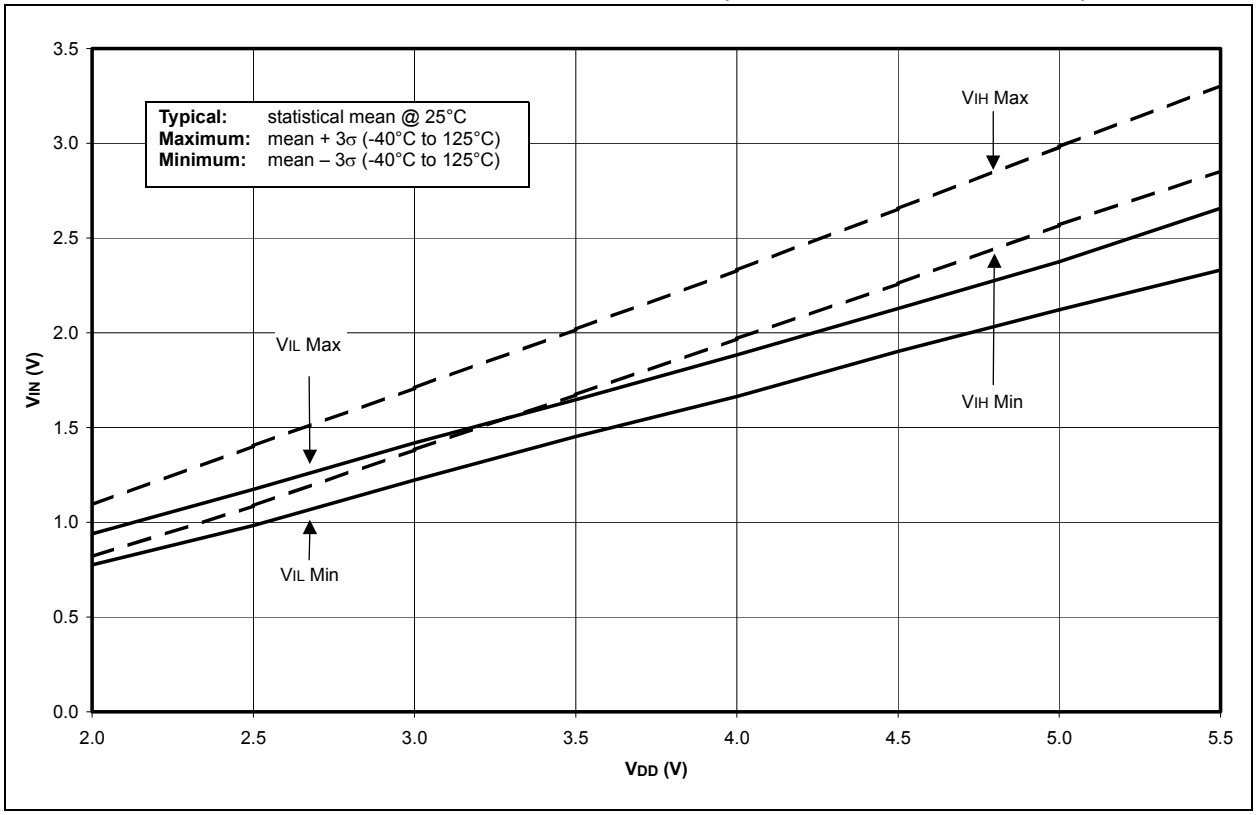

FIGURE 28-28: A/D NON-LINEARITY vs. VREFH (VDD = VREFH, -40°C TO +125°C)

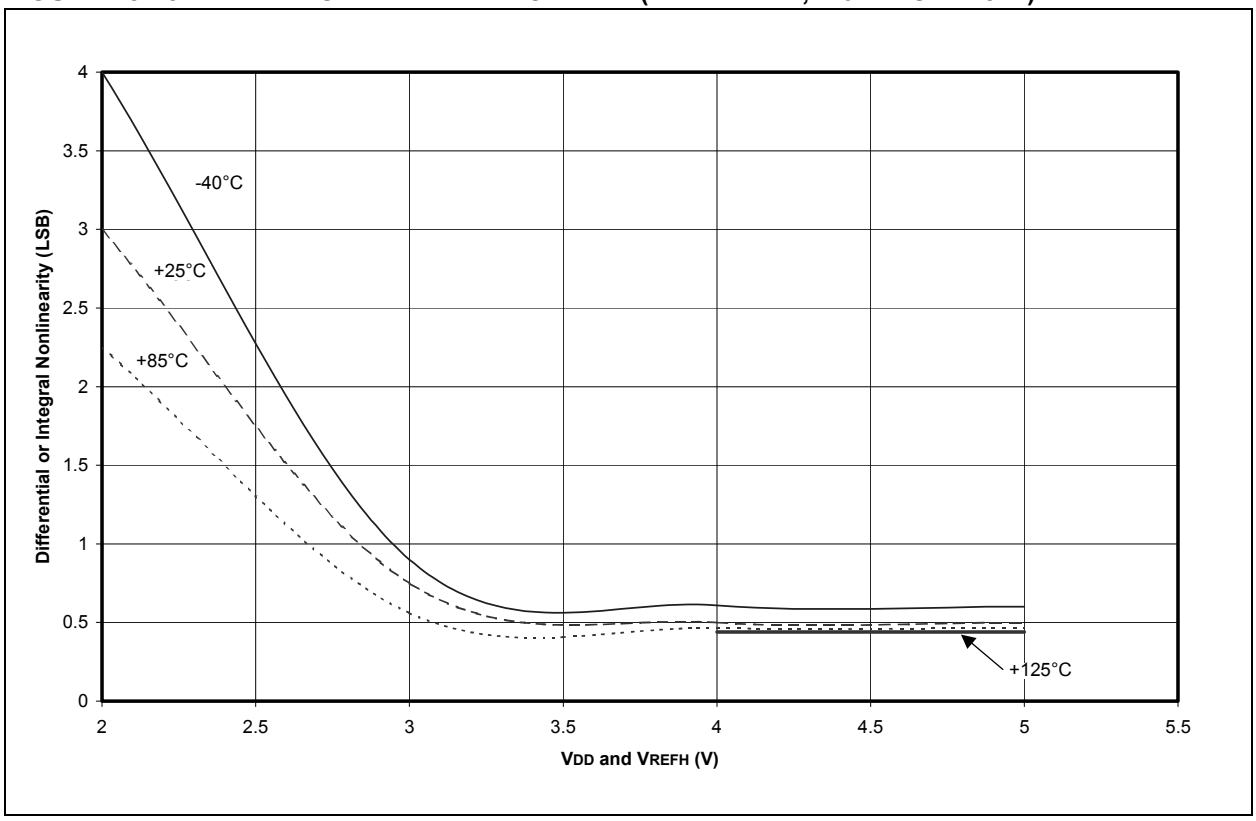

© 2003 Microchip Technology Inc.

FIGURE 28-29: A/D NON-LINEARITY vs. VREFH (VDD = 5V, -40°C TO +125°C)

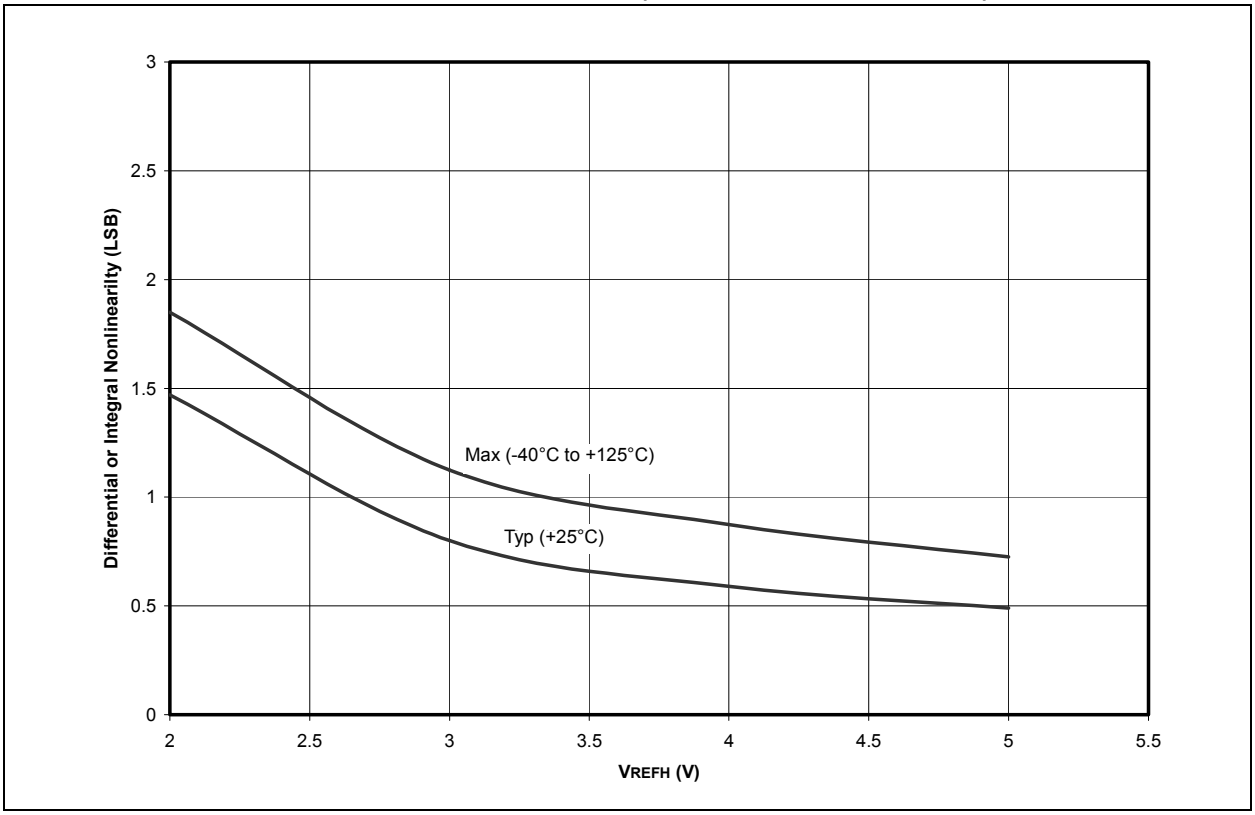

NOTES:

© 2003 Microchip Technology Inc.

29.0 PACKAGING INFORMATION

29.1 Package Marking Information

28-Lead PDIP (Skinny DIP)

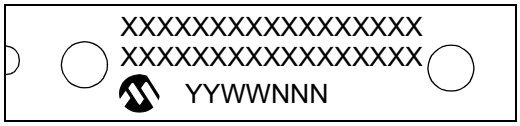

Example

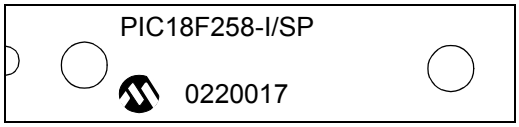

40-Lead PDIP

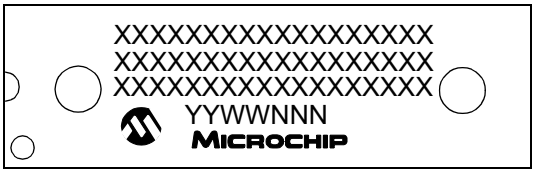

Example

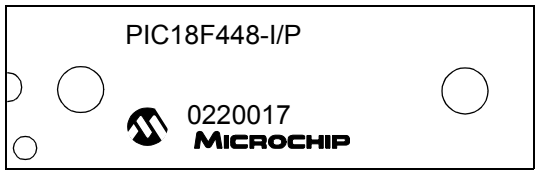

28-Lead SOIC

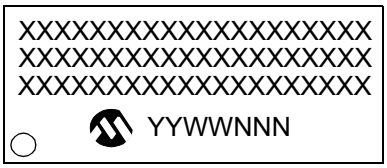

Example

Legend:	XX...X	Customer specific information*
	Y	Year code (last digit of calendar year)
	YY	Year code (last 2 digits of calendar year)
	WW	Week code (week of January 1 is week ‘01’)
	NNN	Alphanumeric traceability code

Note: In the event the full Microchip part number cannot be marked on one line, it will be carried over to the next line thus limiting the number of available characters for customer specific information.

* Standard PICmicro device marking consists of Microchip part number, year code, week code, and traceability code. For PICmicro device marking beyond this, certain price adders apply. Please check with your Microchip Sales Office. For QTP devices, any special marking adders are included in QTP price.

29.1 Package Marking Information (Continued)

44-Lead PLCC

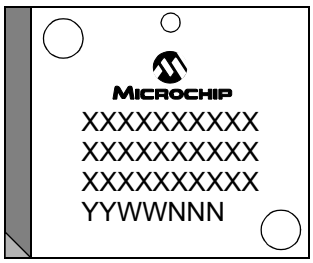

Example

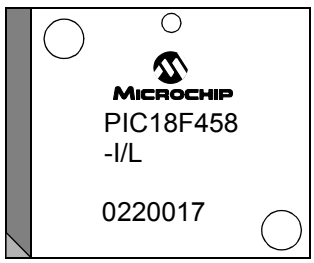

44-Lead TQFP

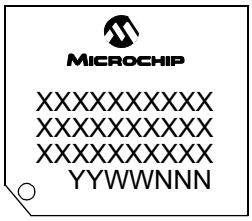

Example

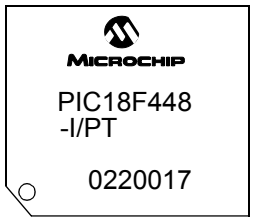

© 2003 Microchip Technology Inc.

29.2 Package Details

The following sections give the technical details of the packages.

28-Lead Skinny Plastic Dual In-line (SP) – 300 mil (PDIP)

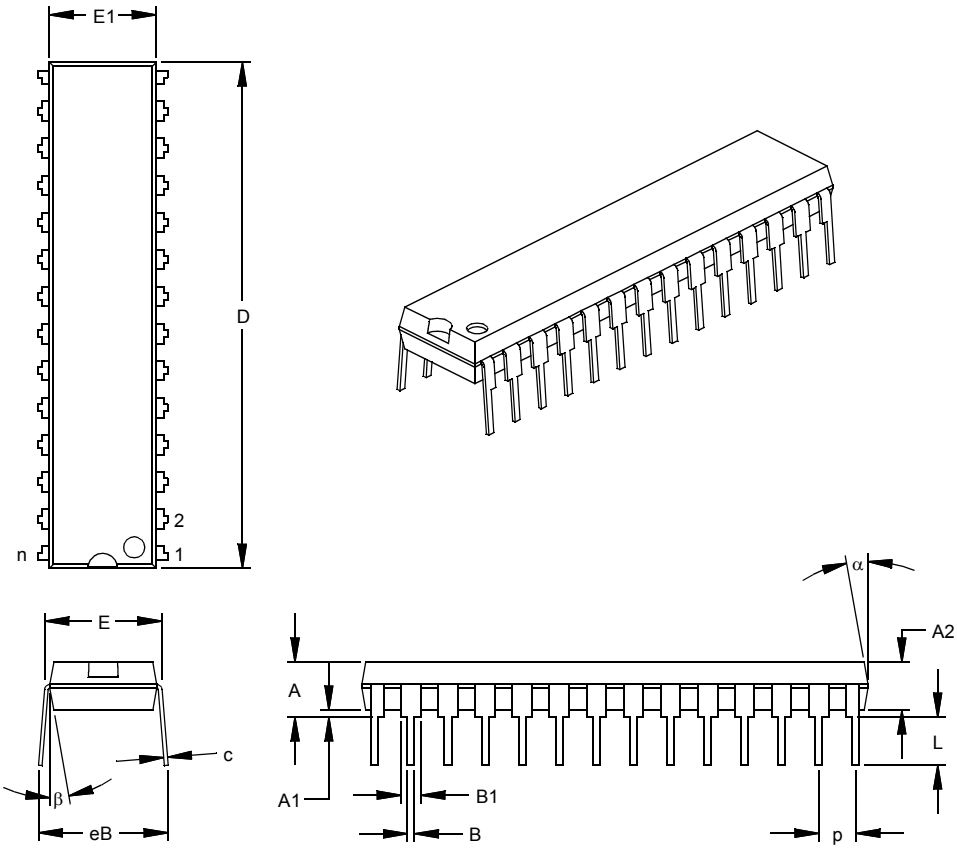

Units		INCHES*			MILLIMETERS		
Dimension Limits		MIN	NOM	MAX	MIN	NOM	MAX
Number of Pins	n		28			28	
Pitch	p		.100			2.54	
Top to Seating Plane	A	.140	.150	.160	3.56	3.81	4.06
Molded Package Thickness	A2	.125	.130	.135	3.18	3.30	3.43
Base to Seating Plane	A1	.015			0.38		
Shoulder to Shoulder Width	E	.300	.310	.325	7.62	7.87	8.26
Molded Package Width	E1	.275	.285	.295	6.99	7.24	7.49
Overall Length	D	1.345	1.365	1.385	34.16	34.67	35.18
Tip to Seating Plane	L	.125	.130	.135	3.18	3.30	3.43
Lead Thickness	c	.008	.012	.015	0.20	0.29	0.38
Upper Lead Width	B1	.040	.053	.065	1.02	1.33	1.65
Lower Lead Width	B	.016	.019	.022	0.41	0.48	0.56
Overall Row Spacing §	eB	.320	.350	.430	8.13	8.89	10.92
Mold Draft Angle Top	α	5	10	15	5	10	15
Mold Draft Angle Bottom	β	5	10	15	5	10	15

* Controlling Parameter
§ Significant Characteristic
Notes:
Dimension D and E1 do not include mold flash or protrusions. Mold flash or protrusions shall not exceed .010” (0.254mm) per side.
JEDEC Equivalent: MO-095
Drawing No. C04-070

40-Lead Plastic Dual In-line (P) – 600 mil (PDIP)

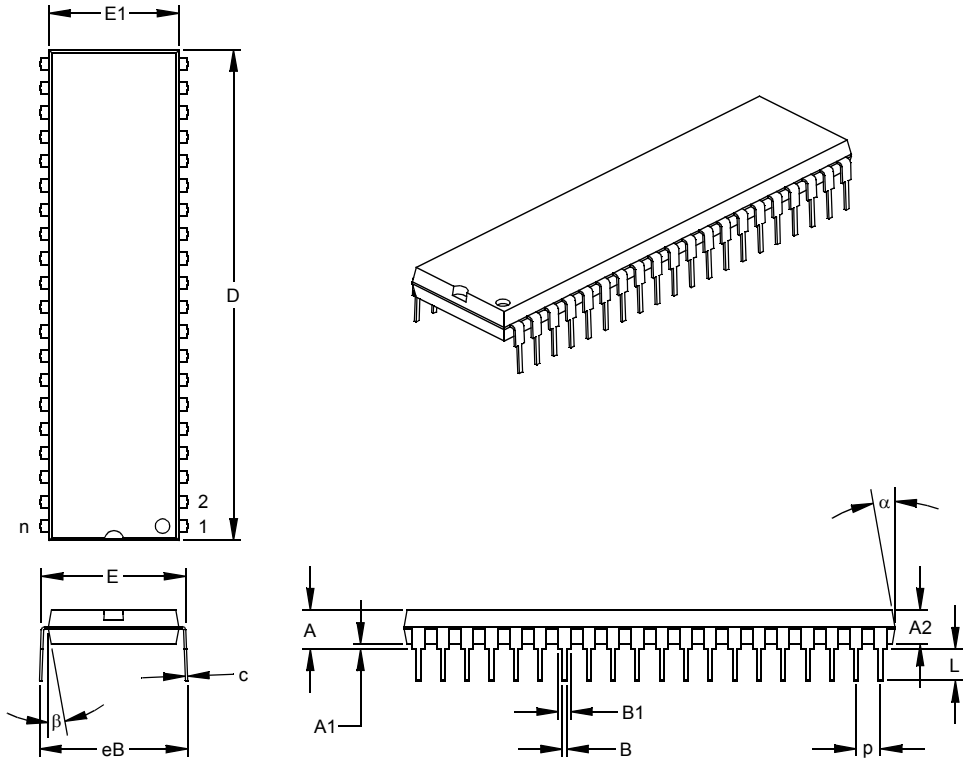

Units		INCHES*			MILLIMETERS		
Dimension Limits		MIN	NOM	MAX	MIN	NOM	MAX
Number of Pins	n		40			40	
Pitch	p		.100			2.54	
Top to Seating Plane	A	.160	.175	.190	4.06	4.45	4.83
Molded Package Thickness	A2	.140	.150	.160	3.56	3.81	4.06
Base to Seating Plane	A1	.015			0.38		
Shoulder to Shoulder Width	E	.595	.600	.625	15.11	15.24	15.88
Molded Package Width	E1	.530	.545	.560	13.46	13.84	14.22
Overall Length	D	2.045	2.058	2.065	51.94	52.26	52.45
Tip to Seating Plane	L	.120	.130	.135	3.05	3.30	3.43
Lead Thickness	c	.008	.012	.015	0.20	0.29	0.38
Upper Lead Width	B1	.030	.050	.070	0.76	1.27	1.78
Lower Lead Width	B	.014	.018	.022	0.36	0.46	0.56
Overall Row Spacing §	eB	.620	.650	.680	15.75	16.51	17.27
Mold Draft Angle Top	α	5	10	15	5	10	15
Mold Draft Angle Bottom	β	5	10	15	5	10	15

* Controlling Parameter
§ Significant Characteristic
Notes:
Dimensions D and E1 do not include mold flash or protrusions. Mold flash or protrusions shall not exceed .010” (0.254mm) per side.
JEDEC Equivalent: MO-011
Drawing No. C04-016

© 2003 Microchip Technology Inc.

28-Lead Plastic Small Outline (SO) – Wide, 300 mil (SOIC)

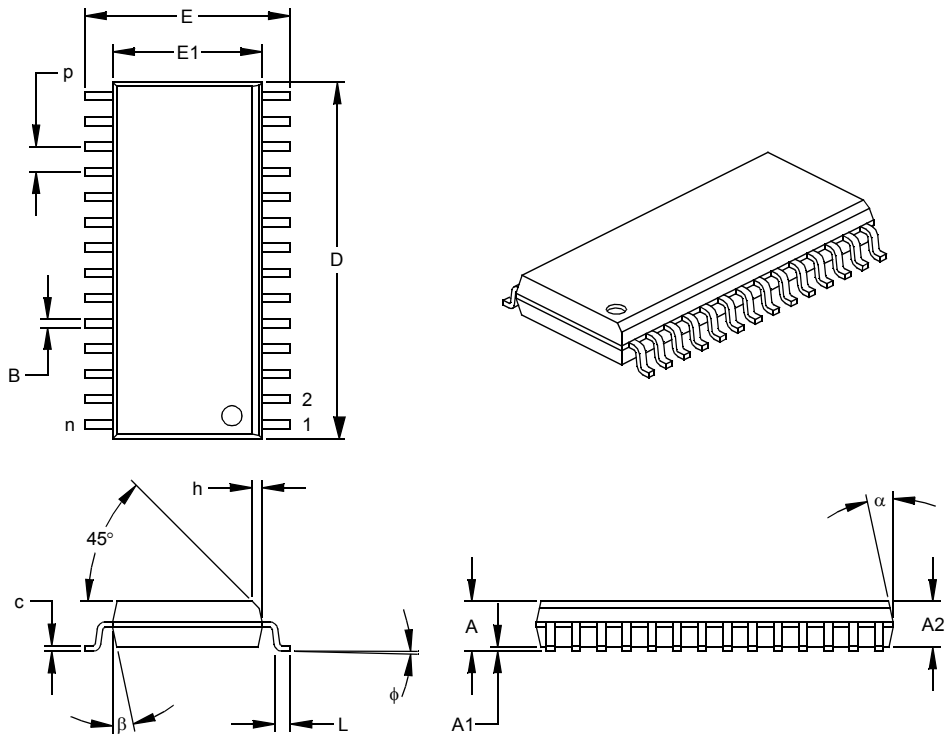

Units		INCHES*			MILLIMETERS		
Dimension Limits		MIN	NOM	MAX	MIN	NOM	MAX
Number of Pins	n		28			28	
Pitch	p		.050			1.27	
Overall Height	A	.093	.099	.104	2.36	2.50	2.64
Molded Package Thickness	A2	.088	.091	.094	2.24	2.31	2.39
Standoff §	A1	.004	.008	.012	0.10	0.20	0.30
Overall Width	E	.394	.407	.420	10.01	10.34	10.67
Molded Package Width	E1	.288	.295	.299	7.32	7.49	7.59
Overall Length	D	.695	.704	.712	17.65	17.87	18.08
Chamfer Distance	h	.010	.020	.029	0.25	0.50	0.74
Foot Length	L	.016	.033	.050	0.41	0.84	1.27
Foot Angle Top	ϕ	0	4	8	0	4	8
Lead Thickness	c	.009	.011	.013	0.23	0.28	0.33
Lead Width	B	.014	.017	.020	0.36	0.42	0.51
Mold Draft Angle Top	α	0	12	15	0	12	15
Mold Draft Angle Bottom	β	0	12	15	0	12	15

* Controlling Parameter
§ Significant Characteristic

Notes:
Dimensions D and E1 do not include mold flash or protrusions. Mold flash or protrusions shall not exceed .010” (0.254mm) per side.
JEDEC Equivalent: MS-013
Drawing No. C04-052

44-Lead Plastic Leaded Chip Carrier (L) – Square (PLCC)

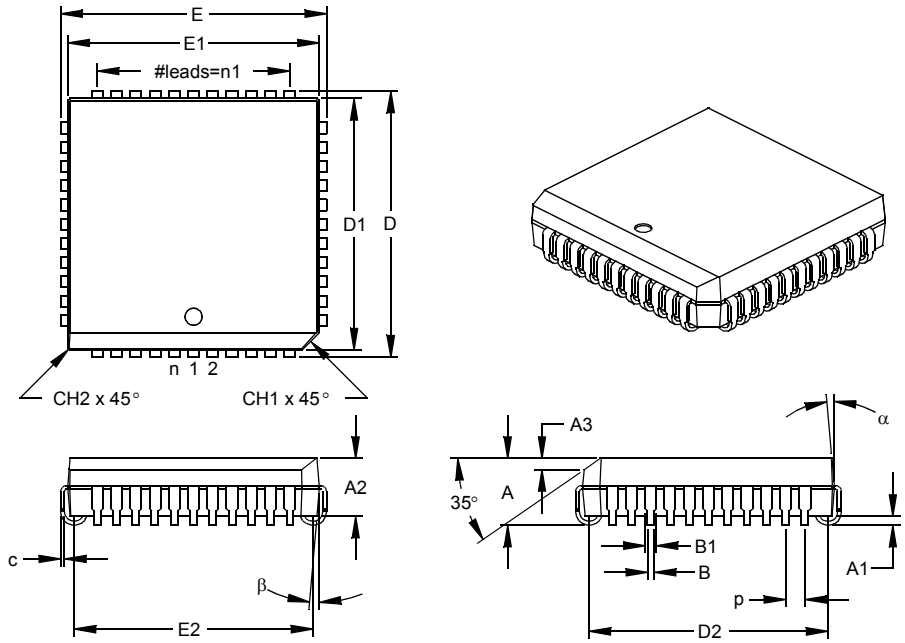

Units		INCHES*			MILLIMETERS		
Dimension Limits		MIN	NOM	MAX	MIN	NOM	MAX
Number of Pins	n		44			44	
Pitch	p		.050			1.27	
Pins per Side	n1		11			11	
Overall Height	A	.165	.173	.180	4.19	4.39	4.57
Molded Package Thickness	A2	.145	.153	.160	3.68	3.87	4.06
Standoff §	A1	.020	.028	.035	0.51	0.71	0.89
Side 1 Chamfer Height	A3	.024	.029	.034	0.61	0.74	0.86
Corner Chamfer 1	CH1	.040	.045	.050	1.02	1.14	1.27
Corner Chamfer (others)	CH2	.000	.005	.010	0.00	0.13	0.25
Overall Width	E	.685	.690	.695	17.40	17.53	17.65
Overall Length	D	.685	.690	.695	17.40	17.53	17.65
Molded Package Width	E1	.650	.653	.656	16.51	16.59	16.66
Molded Package Length	D1	.650	.653	.656	16.51	16.59	16.66
Footprint Width	E2	.590	.620	.630	14.99	15.75	16.00
Footprint Length	D2	.590	.620	.630	14.99	15.75	16.00
Lead Thickness	c	.008	.011	.013	0.20	0.27	0.33
Upper Lead Width	B1	.026	.029	.032	0.66	0.74	0.81
Lower Lead Width	B	.013	.020	.021	0.33	0.51	0.53
Mold Draft Angle Top	α	0	5	10	0	5	10
Mold Draft Angle Bottom	β	0	5	10	0	5	10

* Controlling Parameter
§ Significant Characteristic
Notes:
Dimensions D and E1 do not include mold flash or protrusions. Mold flash or protrusions shall not exceed .010” (0.254mm) per side.
JEDEC Equivalent: MO-047
Drawing No. C04-048

© 2003 Microchip Technology Inc.

44-Lead Plastic Thin Quad Flatpack (PT) 10x10x1 mm Body, 1.0/0.10 mm Lead Form (TQFP)

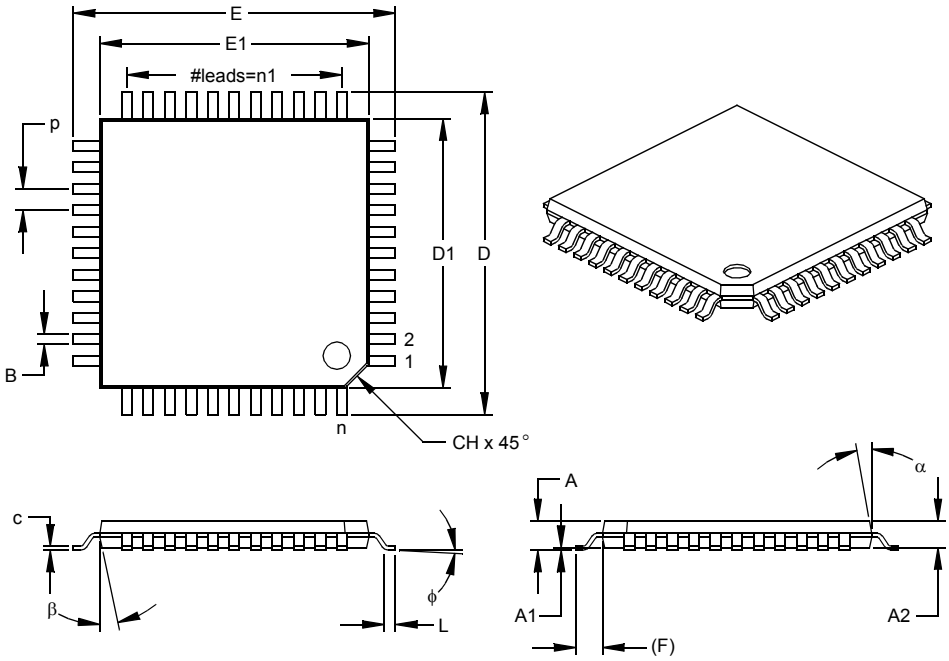

Units		INCHES			MILLIMETERS*		
Dimension Limits		MIN	NOM	MAX	MIN	NOM	MAX
Number of Pins	n		44			44	
Pitch	p		.031			0.80	
Pins per Side	n1		11			11	
Overall Height	A	.039	.043	.047	1.00	1.10	1.20
Molded Package Thickness	A2	.037	.039	.041	0.95	1.00	1.05
Standoff §	A1	.002	.004	.006	0.05	0.10	0.15
Foot Length	L	.018	.024	.030	0.45	0.60	0.75
Footprint (Reference)	(F)		.039		1.00		
Foot Angle	ϕ	0	3.5	7	0	3.5	7
Overall Width	E	.463	.472	.482	11.75	12.00	12.25
Overall Length	D	.463	.472	.482	11.75	12.00	12.25
Molded Package Width	E1	.390	.394	.398	9.90	10.00	10.10
Molded Package Length	D1	.390	.394	.398	9.90	10.00	10.10
Lead Thickness	c	.004	.006	.008	0.09	0.15	0.20
Lead Width	B	.012	.015	.017	0.30	0.38	0.44
Pin 1 Corner Chamfer	CH	.025	.035	.045	0.64	0.89	1.14
Mold Draft Angle Top	α	5	10	15	5	10	15
Mold Draft Angle Bottom	β	5	10	15	5	10	15

* Controlling Parameter
§ Significant Characteristic

Notes:
Dimensions D1 and E1 do not include mold flash or protrusions. Mold flash or protrusions shall not exceed .010” (0.254mm) per side.
JEDEC Equivalent: MS-026
Drawing No. C04-076

NOTES:

© 2003 Microchip Technology Inc.

APPENDIX A: DATA SHEET REVISION HISTORY

Revision A (June 2001)

Original data sheet for the PIC18FXX8 family.

Revision B (May 2002)

Updated information on CAN module, device memory and register maps, I/O ports and Enhanced CCP.

Revision C (January 2003)

This revision includes the DC and AC Characteristics Graphs and Tables (see Section 28.0), Electrical Specifications (see Section 27.0) have been updated, and CAN Certification information has been added.

APPENDIX B: DEVICE DIFFERENCES

The differences between the devices listed in this data sheet are shown in Table B-1.

TABLE B-1: DEVICE DIFFERENCES

Features		PIC18F248	PIC18F258	PIC18F448	PIC18F458
Internal Program Memory	Bytes	16K	32K	16K	32K
	# of Single word Instructions	8192	16384	8192	16384
Data Memory (Bytes)		768	1536	768	1536
I/O Ports		Ports A, B, C	Ports A, B, C	Ports A, B, C, D, E	Ports A, B, C, D, E
Enhanced Capture/Compare/PWM Modules		—	—	1	1
Parallel Slave Port		No	No	Yes	Yes
10-bit Analog-to-Digital Converter		5 input channels	5 input channels	8 input channels	8 input channels
Analog Comparators		No	No	2	2
Analog Comparators VREF Output		N/A	N/A	Yes	Yes
Packages		28-pin SPDIP 28-pin SOIC	28-pin SPDIP 28-pin SOIC	40-pin PDIP 44-pin PLCC 44-pin TQFP	40-pin PDIP 44-pin PLCC 44-pin TQFP

APPENDIX C: DEVICE MIGRATIONS

This section is intended to describe the functional and electrical specification differences when migrating between functionally similar devices (such as from a PIC16C74A to a PIC16C74B).

Not Applicable

APPENDIX D: MIGRATING FROM OTHER PICmicro DEVICES

This discusses some of the issues in migrating from other PICmicro devices to the PIC18FXX8 family of devices.

D.1 PIC16CXXX to PIC18FXX8

See Application Note AN716.

D.2 PIC17CXXX to PIC18FXX8

See Application Note AN726.

© 2003 Microchip Technology Inc.

INDEX

A

A/D 241
- A/D Converter Flag (ADIF Bit) 243
- A/D Converter Interrupt, Configuring 244
- Acquisition Requirements 244
- Acquisition Time 245
- ADCON0 Register 241
- ADCON1 Register 241
- ADRESH Register 241
- ADRESH/ADRESL Registers 243
- ADRESL Register 241
- Analog Port Pins, Configuring 246
- Associated Registers Summary 248
- Calculating the Minimum Required Acquisition Time 245
- Configuring the Module 244
- Conversion Clock (TAD) 246
- Conversion Status (GO/DONE Bit) 243
- Conversion TAD Cycles 248
- Conversions 247
- Minimum Charging Time 245
- Result Registers 247
- Selecting the Conversion Clock 246
- Special Event Trigger (CCP) 126
- Special Event Trigger (ECCP) 133, 248
- TAD vs. Device Operating Frequencies (For Extended, LC Devices) (table) 246
- TAD vs. Device Operating Frequencies (table) 246
- Use of the ECCP Trigger 248

Absolute Maximum Ratings 329
AC (Timing) Characteristics 341
- Parameter Symbology 341

Access Bank 54
ACKSTAT 173
ADCON0 Register 241
- GO/DONE Bit 243

ADCON1 Register 241
ADDLW 287
Addressable Universal Synchronous Asynchronous Receiver Transmitter. *See* USART
ADDWF 287
ADDWFC 288
ADRESH Register 241
ADRESH/ADRESL Registers 243
ADRESL Register 241
Analog-to-Digital Converter. *See* A/D
ANDLW 288
ANDWF 289
Assembler
- MPASM Assembler 323

Associated Registers 192, 197

B

Bank Select Register (BSR) 54
Baud Rate Generator 169
BC 289
BCF 290
BF 173
Block Diagrams
- A/D 243
- Analog Input Model 244, 253
- Baud Rate Generator 169
- CAN Buffers and Protocol Engine 200
- CAN Receive Buffer 230
- CAN Transmit Buffer 227
- Capture Mode Operation 125
- Comparator I/O Operating Modes 250
- Comparator Output 252
- Comparator Voltage Reference Output Buffer Example 257
- Compare (CCP Module) Mode Operation 126
- Enhanced PWM 134
- Interrupt Logic 78
- Low Voltage Detect (LVD) 260
- Low Voltage Detect with External Input 260
- MSSP (I^2C Master Mode) 167
- MSSP (I^2C Mode) 152
- MSSP (SPI Mode) 143
- On-Chip Reset Circuit 25
- PIC18F248/258 Architecture 8
- PIC18F448/458 Architecture 9
- PLL 19
- PORTC (Peripheral Output Override) 100
- PORTD and PORTE (Parallel Slave Port) 107
- PORTD in I/O Port Mode 102
- PORTE 104
- PWM (CCP Module) 128
- RA3:RA0 and RA5 Pins 94
- RA4/T0CKI Pin 94
- RA6/OSC2/CLKO Pin 94
- RB1:RB0 Pins 97
- RB2/CANTX Pins 98
- RB3/CANRX Pins 98
- RB7:RB4 Pins 97
- Reads from FLASH Program Memory 69
- Table Read Operation 65
- Table Write Operation 66
- Table Writes to FLASH Program Memory 71
- Timer0 Module in 16-bit Mode 110
- Timer0 Module in 8-bit Mode 110
- Timer1 Module 114
- Timer1 Module (16-bit Read/Write Mode) 114
- Timer2 Module 118
- Timer3 Module 120
- Timer3 Module (16-bit Read/Write Mode) 120
- USART Receive 191
- USART Transmit 189
- Voltage Reference 256
- Watchdog Timer 273

BN 290
BNC 291
BNN 291
BNOV 292
BNZ 292
BOR. *See* Brown-out Reset
BOV 295
BRA 293

BRG. *See* Baud Rate Generator
Brown-out Reset (BOR) 26, 265
BSF 293
BTFSC 294
BTFSS 294
BTG 295
BZ 296

C

CALL 296
CAN Module 199
    Aborting Transmission 228
    Acknowledge Error 237
    Baud Rate Registers 218
    Baud Rate Setting 233
    Bit Error 237
    Bit Time Partitioning (diagram) 233
    Bit Timing Configuration Registers 236
        BRGCON1 236
        BRGCON2 236
        BRGCON3 236
    Calculating TQ, Nominal Bit Rate and
        Nominal Bit Time 234
    Configuration Mode 226
    Control and Status Registers 201
    Controller Register Map 225
    CRC Error 237
    Disable Mode 226
    Error Detection 237
    Error Modes and Error Counters 237
    Error Modes State (diagram) 238
    Error States 237
    Filter/Mask Truth (table) 232
    Form Error 237
    Hard Synchronization 235
    I/O Control Register 221
    Information Processing Time 234
    Initiating Transmission 228
    Internal Message Reception Flow Chart 231
    Internal Transmit Message Flow Chart 229
    Interrupt Acknowledge 239
    Interrupt Registers 222
    Interrupts 238
        Bus Activity Wake-up 239
        Bus-Off 239
        Code Bits 238
        Error 239
        Message Error 239
        Receive 238
        Receiver Bus Passive 239
        Receiver Overflow 239
        Receiver Warning 239
        Transmit 238
        Transmitter Bus Passive 239
        Transmitter Warning 239
    Lengthening a Bit Period (diagram) 235
    Listen Only Mode 226
    Loopback Mode 227
    Message Acceptance Filters and Masks 215, 232
    Message Acceptance Mask and
        Filter Operation (diagram) 232
    Message Reception 230
    Message Time-Stamping 230
    Message Transmission 227
    Modes of Operation 226
    Normal Mode 226
    Oscillator Tolerance 236
    Overview 199
    Phase Buffer Segments 234
    Programming Time Segments 236
    Propagation Segment 234
    Receive Buffer Registers 210
    Receive Buffers 230
    Receive Message Buffering 230
    Receive Priority 230
    Registers 201
    Resynchronization 235
    Sample Point 234
    Shortening a Bit Period (diagram) 236
    Stuff Bit Error 237
    Synchronization 235
    Synchronization Rules 235
    Synchronization Segment 234
    Time Quanta 234
    Transmit Buffer Registers 206
    Transmit Buffers 227
    Transmit Priority 227
    Transmit/Receive Buffers 199
    Values for ICODE (table) 239
Capture (CCP Module) 124
    CAN Message Time-Stamp 125
    CCP Pin Configuration 124
    CCP1 Prescaler 125
    CCPR1H:CCPR1L Registers 124
    Software Interrupt 125
    Timer1/Timer3 Mode Selection 124
Capture (ECCP Module) 133
    CAN Message Time-Stamp 133
Capture/Compare/PWM (CCP) 123
    Capture Mode. *See* Capture (CCP Module)
    CCP1 Module 124
        Timer Resources 124
    CCPR1H Register 124
    CCPR1L Register 124
    Compare Mode. *See* Compare (CCP Module)
    Interaction of CCP1 and ECCP1 Modules 124
    PWM Mode. *See* PWM (CCP Module)
Ceramic Resonators
    Ranges Tested 17
Clocking Scheme 41
CLRF 297
CLRWDT 297
Code Examples
    16 x 16 Signed Multiply Routine 76
    16 x 16 Unsigned Multiply Routine 76
    8 x 8 Signed Multiply Routine 75
    8 x 8 Unsigned Multiply Routine 75
    Changing Between Capture Prescalers 125
    Data EEPROM Read 61
    Data EEPROM Refresh Routine 62
    Data EEPROM Write 61
    Erasing a FLASH Program Memory Row 70
    Fast Register Stack 40
    How to Clear RAM (Bank 1)
        Using Indirect Addressing 55
    Initializing PORTA 93
    Initializing PORTB 96
    Initializing PORTC 100
    Initializing PORTD 102
    Initializing PORTE 104
    Loading the SSPBUF Register 146

© 2003 Microchip Technology Inc.

Reading a FLASH Program Memory Word 69
Saving STATUS, WREG and BSR Registers in RAM 92
WIN and ICODE Bits Usage in Interrupt Service Routine to Access TX/RX Buffers 203
Writing to FLASH Program Memory 72–73
Code Protection 265
COMF 298
Comparator Module 249
Analog Input Connection Considerations 253
Associated Registers 254
Configuration 250
Effects of a RESET 253
External Reference Signal 251
Internal Reference Signal 251
Interrupts 252
Operation 251
Operation During SLEEP 253
Outputs 251
Reference 251
Response Time 251
Comparator Specifications 340
Comparator Voltage Reference Module 255
Accuracy/Error 256
Associated Registers 257
Configuring 255
Connection Considerations 256
Effects of a RESET 256
Operation During SLEEP 256
Compare (CCP Module) 126
CCP1 Pin Configuration 126
CCPR1 and ECCPR1 Registers 126
Registers Associated with Capture, Compare, Timer1 and Timer3 127
Software Interrupt 126
Special Event Trigger 115, 121, 126, 248
Timer1/Timer3 Mode Selection 126
Compare (ECCP Module) 133
Registers Associated with Enhanced Capture, Compare, Timer1 and Timer3 133
Special Event Trigger 133
Compatible 10-Bit Analog-to-Digital Converter (A/D) Module. *See* A/D.
Configuration Mode (CAN Module) 226
CPFSEQ 298
CPFSGT 299
CPFSLT 299
Crystal Oscillator
Capacitor Selection 18

D

Data EEPROM Memory 59
Associated Registers 63
EEADR Register 59
EECON1 Register 59
EECON2 Register 59
Operation During Code Protect 62
Protection Against Spurious Writes 62
Reading 61
Usage 62
Write Verify 62
Writing to 61
Data Memory 44
General Purpose Registers 44
Special Function Registers 44
Data Memory Map
PIC18F248/448 45
PIC18F258/458 46
DAW 300
DC and AC Characteristics
Graphs and Tables 361
DC Characteristics 332
EEPROM and Enhanced FLASH 339
PIC18FXX8 (Ind., Ext.) and PIC18LFXX8 (Ind.) 336
DCFSNZ 301
DECF 300
DECFSZ 301
Development Support 323
Device Differences 385
Device Migrations 386
Device Overview 7
Features 7
Direct Addressing 56
Disable Mode (CAN Module) 226

E

Electrical Characteristics 329
Enhanced Capture/Compare/PWM (ECCP) 131
Auto-Shutdown 142
Capture Mode. *See* Capture (ECCP Module)
Compare Mode. *See* Compare (ECCP Module)
ECCPR1H Register 132
ECCPR1L Register 132
Interaction of CCP1 and ECCP1 Modules 132
Pin Assignments for Various Modes 132
PWM Mode. *See* PWM (ECCP Module)
Timer Resources 132
Enhanced CCP Auto-Shutdown 142
Enhanced PWM Mode. *See* PWM (ECCP Module) 134
Errata 5
Error Recognition Mode (CAN Module) 226
Evaluation and Programming Tools 327
Analog Design Boards 327
CAN Developers Kit 327
IrDA Development Kit 327
KEELOQ 327
microID Development Software 327
PICDEM MSC Demonstration Boards 327
PowerSmart Battery Charging Evaluation/Calibration Kits 327
RFLab Development Software 327
SEEVAL Designer Kit 327
External Clock Input 19

F

Firmware Instructions 281
FLASH Program Memory 65
Associated Registers 74
Control Registers 66
Erase Sequence 70
Erasing 70
Operation During Code Protect 73
Reading 69
TABLAT (Table Latch) Register 68
Table Pointer Boundaries Based on Operation 68
Table Pointer Boundaries 68
Table Reads and Table Writes 65
TBLPTR (Table Pointer) Register 68
Write Sequence 71

Writing to 71
Protection Against Spurious Writes 73
Unexpected Termination 73
Write Verify 73

G

GOTO 302

H

Hardware Multiplier 75
Operation 75
Performance Comparison (table) 75
HS4 (PLL) 19

I

I/O Ports 93
I^2C Mode 152
ACK Pulse 156, 157
Acknowledge Sequence Timing 176
Baud Rate Generator 169
Bus Collision During a Repeated START Condition 180
Bus Collision During a START Condition 178
Bus Collision During a STOP Condition 181
Clock Arbitration 170
Clock Stretching 162
Effect of a RESET 177
General Call Address Support 166
Master Mode 167
Operation 168
Reception 173
Repeated START Condition Timing 172
Transmission 173
Master Mode START Condition Timing 171
Multi-Master Mode 177
Communication, Bus Collision and Bus Arbitration 177
Operation 156
Read/Write Bit Information (R/$\overline{W}$ Bit) 156, 157
Registers 152
Serial Clock (RC3/SCK/SCL) 157
Slave Mode 156
Addressing 156
Reception 157
Transmission 157
SLEEP Operation 177
STOP Condition Timing 176
ID Locations 265, 279
INCF 302
INCFSZ 303
In-Circuit Debugger 279
In-Circuit Serial Programming (ICSP) 265, 279
Indirect Addressing 56
FSR Register 55
INDF Register 55
Operation 55
INFSNZ 303
Initialization Conditions for All Registers 30
Instruction Cycle 41
Instruction Flow/Pipelining 41
Instruction Format 283
Instruction Set 281
ADDLW 287
ADDWF 287
ADDWFC 288
ANDLW 288
ANDWF 289
BC 289
BCF 290
BN 290
BNC 291
BNN 291
BNOV 292
BNZ 292
BOV 295
BRA 293
BSF 293
BTFSC 294
BTFSS 294
BTG 295
BZ 296
CALL 296
CLRF 297
CLRWDT 297
COMF 298
CPFSEQ 298
CPFSGT 299
CPFSLT 299
DAW 300
DCFSNZ 301
DECF 300
DECFSZ 301
GOTO 302
INCF 302
INCFSZ 303
INFSNZ 303
IORLW 304
IORWF 304
LFSR 305
MOVF 305
MOVFF 306
MOVLB 306
MOVLW 307
MOVWF 307
MULLW 308
MULWF 308
NEGF 309
NOP 309
POP 310
PUSH 310
RCALL 311
RESET 311
RETFIE 312
RETLW 312
RETURN 313
RLCF 313
RLNCF 314
RRCF 314
RRNCF 315
SETF 315
SLEEP 316
SUBFWB 316
SUBLW 317
SUBWF 317
SUBWFB 318
SWAPF 318
TBLRD 319
TBLWT 320
TSTFSZ 321
XORLW 321
XORWF 322
Summary Table 284

© 2003 Microchip Technology Inc.

INTCON Register
RBIF Bit ... 96
Inter-Integrated Circuit. *See* I^2C
Interrupt Sources
A/D Conversion Complete ... 244
CAN Module ... 238
Capture Complete (CCP) ... 125
Compare Complete (CCP) ... 126
Interrupt-on-Change (RB7:RB4) ... 96
TMR0 Overflow ... 111
TMR1 Overflow ... 113, 115
TMR2 to PR2 Match ... 118
TMR2 to PR2 Match (PWM) ... 117, 128
TMR3 Overflow ... 119, 121
Interrupt-on-Change (RB7:RB4) Flag (RBIF Bit) ... 96
Interrupts ... 77, 265
Context Saving During ... 92
Enable Registers ... 85
Flag Registers ... 82
INT ... 92
PORTB Interrupt-on-Change ... 92
Priority Registers ... 88
TMR0 ... 92
Interrupts, Flag Bits
A/D Converter Flag (ADIF Bit) ... 243
CCP1 Flag (CCP1IF Bit) ... 124, 125, 126
IORLW ... 304
IORWF ... 304

L

LFSR ... 305
Listen Only Mode (CAN Module) ... 226
Lookup Tables ... 43
Computed GOTO ... 43
Table Reads/Table Writes ... 43
Loopback Mode (CAN Module) ... 226
Low Voltage Detect ... 259
Characteristics ... 338
Current Consumption ... 263
Effects of a RESET ... 263
Operation ... 262
Operation During SLEEP ... 263
Reference Voltage Set Point ... 263
Typical Application ... 259
Low Voltage ICSP Programming ... 279
LVD. *See* Low Voltage Detect. ... 259

M

Master Synchronous Serial Port (MSSP). *See* MSSP.
Master Synchronous Serial Port. *See* MSSP
Memory Organization ... 37
Data Memory ... 44
Internal Program Memory Operation ... 37
Program Memory ... 37
Migrating from other PICmicro Devices ... 386
MOVF ... 305
MOVFF ... 306
MOVLB ... 306
MOVLW ... 307
MOVWF ... 307
MPLAB ASM30 Assembler, Linker, Librarian ... 324
MPLAB C17 and MPLAB C18 C Compilers ... 324
MPLAB C30 C Compiler ... 324
MPLAB ICD 2 In-Circuit Debugger ... 325
MPLAB ICE 2000 High Performance Universal In-Circuit Emulator ... 325
MPLAB ICE 4000 High Performance Universal In-Circuit Emulator ... 325
MPLAB Integrated Development Environment Software ... 323
MPLAB SIM Software Simulator ... 324
MPLAB SIM30 Software Simulator ... 324
MPLINK Object Linker/MPLIB Object Librarian ... 324
MSSP ... 143
Control Registers ... 143
Enabling SPI I/O ... 147
Operation ... 146
Overview ... 143
SPI Master Mode ... 148
SPI Master/Slave Connection ... 147
SPI Mode ... 143
SPI Slave Mode ... 149
TMR2 Output for Clock Shift ... 117, 118
Typical Connection ... 147
MSSP. *See also* I^2C Mode, SPI Mode.
MULLW ... 308
MULWF ... 308

N

NEGF ... 309
NOP ... 309
Normal Operation Mode (CAN Module) ... 226

O

OPCODE Field Descriptions ... 282
OPTION_REG Register
PSA Bit ... 111
T0CS Bit ... 111
T0PS2:T0PS0 Bits ... 111
T0SE Bit ... 111
Oscillator
Effects of SLEEP Mode ... 23
Power-up Delays ... 23
Switching Feature ... 20
System Clock Switch Bit ... 20
Transitions ... 21
Oscillator Configurations ... 17
Crystal Oscillator, Ceramic Resonators ... 17
EC ... 17
ECIO ... 17
HS ... 17
HS4 ... 17
LP ... 17
RC ... 17, 18
RCIO ... 17
XT ... 17
Oscillator Selection ... 265
Oscillator, Timer1 ... 113, 115, 121
Oscillator, WDT ... 272

© 2003 Microchip Technology Inc.

P

Packaging Information 377
  Details 379
  Marking 377
Parallel Slave Port (PSP) 102, 107
  Associated Registers 108
  PORTD 107
  PSP Mode Select (PSPMODE) Bit 102
  RE2/CS 107
PIC18FXX8 Voltage-Frequency Graph (Industrial) 330
PIC18LFXX8 Voltage-Frequency Graph (Industrial) 331
PICDEM 1 PICmicro Demonstration Board 326
PICDEM 17 Demonstration Board 326
PICDEM 18R PIC18C601/801
  Demonstration Board 327
PICDEM 2 Plus Demonstration Board 326
PICDEM 3 PIC16C92X Demonstration Board 326
PICDEM LIN PIC16C43X Demonstration Board 327
PICDEM USB PIC16C7X5 Demonstration Board 327
PICDEM.net Internet/Ethernet
  Demonstration Board 326
PICSTART Plus Development Programmer 325
Pin Functions
  MCLR/VPP 10
  OSC1/CLKI 10
  OSC2/CLKO/RA6 10
  RA0/AN0/CVREF 11
  RA1/AN1 11
  RA2/AN2/VREF- 11
  RA3/AN3/VREF+ 11
  RA4/T0CKI 11
  RA5/AN4/SS/LVDIN 11
  RA6 11
  RB0/INT0 12
  RB1/INT1 12
  RB2/CANTX/INT2 12
  RB3/CANRX 12
  RB4 12
  RB5/PGM 12
  RB6/PGC 12
  RB7/PGD 12
  RC0/T1OSO/T1CKI 13
  RC1/T1OSI 13
  RC2/CCP1 13
  RC3/SCK/SCL 13
  RC4/SDI/SDA 13
  RC5/SDO 13
  RC6/TX/CK 13
  RC7/RX/DT 13
  RD0/PSP0/C1IN+ 14
  RD1/PSP1/C1IN- 14
  RD2/PSP2/C2IN+ 14
  RD3/PSP3/C2IN- 14
  RD4/PSP4/ECCP1/P1A 14
  RD5/PSP5/P1B 14
  RD6/PSP6/P1C 14
  RD7/PSP7/P1D 14
  RE0/AN5/RD 15
  RE1/AN6/WR/C1OUT 15
  RE2/AN7/CS/C2OUT 15
  VDD 15
  VSS 15
Pinout I/O Descriptions 10
Pointer, FSRn 55
POP 310
POR. *See* Power-on Reset
PORTA
  Associated Register Summary 95
  Functions 95
  LATA Register 93
  PORTA Register 93
  TRISA Register 93
PORTB
  Associated Register Summary 99
  Functions 99
  LATB Register 96
  PORTB Register 96
  RB7:RB4 Interrupt-on-Change Flag (RBIF Bit) 96
  TRISB Register 96
PORTC
  Associated Register Summary 101
  Functions 101
  LATC Register 100
  PORTC Register 100
  RC3/SCK/SCL Pin 157
  RC7/RX/DT pin 185
  TRISC Register 100, 183
PORTD
  Associated Register Summary 103
  Functions 103
  LATD Register 102
  Parallel Slave Port (PSP) Function 102
  PORTD Register 102
  TRISD Register 102
PORTE
  Associated Register Summary 106
  Functions 106
  LATE Register 104
  PORTE Register 104
  PSP Mode Select (PSPMODE) Bit 102
  RE2/CS 107
  TRISE Register 104
Postscaler, WDT
  Assignment (PSA Bit) 111
  Rate Select (T0PS2:T0PS0 Bits) 111
Power-down Mode. *See* SLEEP
Power-on Reset (POR) 26, 265
  MCLR 26
  Oscillator Start-up Timer (OST) 26, 265
  PLL Lock Time-out 26
  Power-up Timer (PWRT) 26, 265
  Time-out Sequence 27
Power-up Delays
  OSC1 and OSC2 Pin States in SLEEP Mode 23
Prescaler, Timer0 111
  Assignment (PSA Bit) 111
  Rate Select (T0PS2:T0PS0 Bits) 111
Prescaler, Timer2 128
PRO MATE II Universal Device Programmer 325
Program Counter
  PCL Register 40
  PCLATH Register 40
  PCLATU Register 40

© 2003 Microchip Technology Inc.

Program Memory 37
Fast Register Stack 40
Instructions 41
Two-Word 43
Map and Stack for PIC18F248/448 37
Map and Stack for PIC18F258/458 37
PUSH and POP Instructions 40
Return Address Stack 38
Return Stack Pointer (STKPTR) 38
Stack Full/Underflow Resets 40
Top-of-Stack Access 38
Program Verification and Code Protection 276
Associated Registers Summary 276
Configuration Register Protection 279
Data EEPROM Code Protection 279
Program Memory Code Protection 277
Programming, Device Instructions 281
PUSH 310
PWM (CCP Module) 128
CCPR1H:CCPR1L Registers 128
Duty Cycle 128
Example Frequencies/Resolutions 129
Period 128
Registers Associated with PWM and Timer2 129
Setup for PWM Operation 129
TMR2 to PR2 Match 117, 128
PWM (ECCP Module) 134
Direction Change in Full-Bridge Output Mode 138
Full-Bridge Application Example 138
Full-Bridge Mode 137
Half-Bridge Mode 136
Half-Bridge Output Mode Applications Example 136
Output Configurations 134
Output Polarity Configuration 140
Output Relationships Diagram 135
Programmable Deadband Delay 140
Registers Associated with Enhanced PWM and Timer2 141
Setup for PWM Operation 141
Standard Mode 134
Start-up Considerations 140
System Implementation 140

Q

Q Clock 128

R

RAM. *See* Data Memory
RCALL 311
RCON Register
Significance of Status Bits vs. Initialization Condition 27
RCSTA Register 183
SPEN Bit 183
Receiver Warning 239
Register File 44
Register File Summary 49
Registers
ADCON0 (A/D Control 0) 241
ADCON1 (A/D Control 1) 242
BRGCON1 (Baud Rate Control 1) 218
BRGCON2 (Baud Rate Control 2) 219
BRGCON3 (Baud Rate Control 3) 220
CANCON (CAN Control) 201
CANSTAT (CAN Status) 202
CCP1CON (CCP1 Control) 123
CIOCON (CAN I/O Control) 221
CMCON (Comparator Control) 249
COMSTAT (CAN Communication Status) 205
CONFIG1H (Configuration 1 High) 266
CONFIG2H (Configuration 2 High) 267
CONFIG2L (Configuration 2 Low) 266
CONFIG4L (Configuration 4 Low) 267
CONFIG5H (Configuration 5 High) 268
CONFIG5L (Configuration 5 Low) 268
CONFIG6H (Configuration 6 High) 269
CONFIG6L (Configuration 6 Low) 269
CONFIG7H (Configuration 7 High) 270
CONFIG7L (Configuration 7 Low) 270
CVRCON (Comparator Voltage Reference Control) 255
Device ID 1 271
Device ID 2 271
ECCP1CON (ECCP1 Control) 131
ECCP1DEL (PWM Delay) 140
ECCPAS (Enhanced Capture/Compare/PWM Auto-Shutdown Control) 142
EECON1 (EEPROM Control 1) 60, 67
INTCON (Interrupt Control) 79
INTCON2 (Interrupt Control 2) 80
INTCON3 (Interrupt Control 3) 81
IPR1 (Peripheral Interrupt Priority 1) 88
IPR2 (Peripheral Interrupt Priority 2) 89
IPR3 (Peripheral Interrupt Priority 3) 90, 224
LVDCON (LVD Control) 261
OSCCON (Oscillator Control) 20
PIE1 (Peripheral Interrupt Enable 1) 85
PIE2 (Peripheral Interrupt Enable 2) 86
PIE3 (Peripheral Interrupt Enable 3) 87, 223
PIR1 (Peripheral Interrupt Request (Flag) 1) 82
PIR2 (Peripheral Interrupt Request (Flag) 2) 83
PIR3 (Peripheral Interrupt Request (Flag) 3) 84
RCON (Reset Control) 58, 91
RCSTA (USART Receive Status) 184
RXB0CON (Receive Buffer 0 Control) 210
RXB1CON (Receive Buffer 1 Control) 211
RXBnDLC (Receive Buffer n Data Length Code) 213
RXBnDm (Receive Buffer n Data Field Byte m) 214
RXBnEIDH (Receive Buffer n Extended Identifier, High Byte) 212
RXBnEIDL (Receive Buffer n Extended Indentifier, Low Byte) 213
RXBnSIDH (Receive Buffer n Standard Indentifier, High Byte) 212
RXBnSIDL (Receive Buffer n Standard Identifier, Low Byte) 212
RXERRCNT (Receive Error Count) 214
RXFnEIDH (Receive Acceptance Filter n Extended Identifier, High Byte) 216
RXFnEIDL (Receive Acceptance Filter n Extended Identifier, Low Byte) 216
RXFnSIDH (Receive Acceptance Filter n Standard Identifier Filter, High Byte) 215
RXFnSIDL (Receive Acceptance Filter n Standard Identifier Filter, Low Byte) 215

RXMnEIDH (Receive Acceptance Mask n Extended Identifier Mask, High Byte) 217
RXMnEIDL (Receive Acceptance Mask n Extended Identifier Mask, Low Byte) 217
RXMnSIDH (Receive Acceptance Mask n Standard Identifier Mask, High Byte) 216
RXMnSIDL (Receive Acceptance Mask n Standard Identifier Mask, Low Byte) 217
SSPCON1 (MSSP Control 1) (I^2C Mode) 154
SSPCON1 (MSSP Control 1) (SPI Mode) 145
SSPCON2 (MSSP Control 2) (I^2C Mode) 155
SSPSTAT (MSSP Status) (I^2C Mode) 153
SSPSTAT (MSSP Status) (SPI Mode) 144
STATUS 57
STKPTR (Stack Pointer) 39
T0CON (Timer0 Control) 109
T1CON (Timer1 Control) 113
T2CON (Timer2 Control) 117
T3CON (Timer3 Control) 119
TRISE (PORTE Direction/PSP Control) 105
TXBnCON (Transmit Buffer n Control) 206
TXBnDLC (Transmit Buffer n Data Length Code) 209
TXBnDm (Transmit Buffer n Data Field Byte m) 208
TXBnEIDH (Transmit Buffer n Extended Identifier, High Byte) 207
TXBnEIDL (Transmit Buffer n Extended Identifier, Low Byte) 208
TXBnSIDH (Transmit Buffer n Standard Identifier, High Byte) 207
TXBnSIDL (Transmit Buffer n Standard Identifier, Low Byte) 207
TXERRCNT (Transmit Error Count) 209
TXSTA (USART Transmit Status) 183
WDTCON (Watchdog Timer Control) 272
RESET 25, 265, 311
MCLR Reset During Normal Operation 25
MCLR Reset During SLEEP 25
Power-on Reset (POR) 25
Programmable Brown-out Reset (PBOR) 25
RESET Instruction 25
Stack Full Reset 25
Stack Underflow Reset 25
Watchdog Timer (WDT) Reset 25
RETFIE 312
RETLW 312
RETURN 313
Revision History 385
RLCF 313
RLNCF 314
RRCF 314
RRNCF 315

S

Sales and Support 399
SCI. *See* USART
SCK Pin 143
SDI Pin 143
SDO Pin 143
Serial Clock (SCK) Pin 143
Serial Communication Interface. *See* USART
Serial Peripheral Interface. *See* SPI
SETF 315
Slave Select ($\overline{SS}$) Pin 143
Slave Select Synchronization 149
Slave Select, $\overline{SS}$ Pin 143
SLEEP 265, 274, 316
Special Event Trigger. *See* Compare
Special Features of the CPU 265
Configuration Bits 265
Configuration Bits and Device IDs 265
Configuration Registers 266–271
Special Function Register Map 47
Special Function Registers 44
SPI Mode
Associated Registers 151
Bus Mode Compatibility 151
Effects of a RESET 151
Master Mode 148
Master/Slave Connection 147
Serial Clock 143
Serial Data In (SDI) Pin 143
Serial Data Out (SDO) Pin 143
Slave Mode 149
Slave Select 143
Slave Select Synchronization 149
SLEEP Operation 151
SPI Clock 148
SSPBUF Register 148
SSPSR Register 148
SSPOV Bit 173
SSPSTAT Register
R/$\overline{W}$ Bit 156, 157
SUBFWB 316
SUBLW 317
SUBWF 317
SUBWFB 318
SWAPF 318

T

Table Pointer Operations (table) 68
TBLRD 319
TBLWT 320
Timer0 109
16-bit Mode Timer Reads and Writes 111
Associated Registers 111
Clock Source Edge Select (T0SE Bit) 111
Clock Source Select (T0CS Bit) 111
Operation 111
Overflow Interrupt 111
Prescaler 111
Prescaler. *See* Prescaler, Timer0
Switching Prescaler Assignment 111
Timer1 113
16-bit Read/Write Mode 115
Associated Registers 115
Operation 114
Oscillator 113, 115
Overflow Interrupt 113, 115
Special Event Trigger (CCP) 115, 126
Special Event Trigger (ECCP) 133
TMR1H Register 113
TMR1L Register 113
TMR3L Register 119

© 2003 Microchip Technology Inc.

Timer2 117
Associated Registers 118
Operation 117
Postscaler. *See* Postscaler, Timer2
PR2 Register 117, 128
Prescaler. *See* Prescaler, Timer2
SSP Clock Shift 117, 118
TMR2 Register 117
TMR2 to PR2 Match Interrupt 117, 118, 128
Timer3 119
Associated Registers 121
Operation 120
Oscillator 121
Overflow Interrupt 119, 121
Special Event Trigger (CCP) 121
TMR3H Register 119
Timing Conditions 342
Load Conditions for Device Timing Specifications 342
Temperature and Voltage Specifications - AC 342
Timing Diagrams
A/D Conversion 359
Acknowledge Sequence 176
Baud Rate Generator with Clock Arbitration 170
BRG Reset Due to SDA Arbitration During START Condition 179
Brown-out Reset (BOR) and Low Voltage Detect 345
Bus Collision During a Repeated START Condition (Case 1) 180
Bus Collision During a Repeated START Condition (Case2) 180
Bus Collision During a STOP Condition (Case 1) 181
Bus Collision During a STOP Condition (Case 2) 181
Bus Collision During START Condition (SCL = 0) 179
Bus Collision During START Condition (SDA Only) 178
Bus Collision for Transmit and Acknowledge 177
Capture/Compare/PWM (CCP1 and ECCP1) 347
CLKO and I/O 344
Clock Synchronization 163
Clock/Instruction Cycle 41
External Clock 343
First START Bit 171
Full-Bridge PWM Output 137
Half-Bridge PWM Output 136
I^2C Bus Data 353
I^2C Bus START/STOP Bits 353
I^2C Master Mode (Reception, 7-bit Address) 175
I^2C Master Mode (Transmission, 7 or 10-bit Address) 174
I^2C Slave Mode (Transmission, 10-bit Address) 161
I^2C Slave Mode (Transmission, 7-bit Address) 159
I^2C Slave Mode SEN = 1 (Reception, 10-bit Address) 165
I^2C Slave Mode with SEN = 0 (Reception, 10-bit Address) 160
I^2C Slave Mode with SEN = 0 (Reception, 7-bit Address) 158
I^2C Slave Mode with SEN = 1 (Reception, 7-bit Address) 164
Low Voltage Detect 262
Master SSP I^2C Bus Data 355
Master SSP I^2C Bus START/STOP Bits 355
Parallel Slave Port (PIC18F248 and PIC18F458) 348
Parallel Slave Port Read 108
Parallel Slave Port Write 107
PWM Direction Change at Near 100% Duty Cycle 139
PWM Output 128
Repeat START Condition 172
RESET, Watchdog Timer (WDT), Oscillator Start-up Timer (OST), Power-up Timer (PWRT) 345
Slave Mode General Call Address Sequence (7 or 10-bit Address Mode) 166
Slave Synchronization 149
Slow Rise Time ($\overline{MCLR}$ Tied to V_{DD}) 29
SPI Master Mode Example (CKE = 0) 349
SPI Master Mode Example (CKE = 1) 350
SPI Mode (Master Mode) 148
SPI Mode (Slave Mode with CKE = 0) 150
SPI Mode (Slave Mode with CKE = 1) 150
SPI Slave Mode Example (CKE = 0) 351
SPI Slave Mode Example (CKE = 1) 352
STOP Condition Receive or Transmit Mode 176
Time-out Sequence on POR w/PLL Enabled ($\overline{MCLR}$ Tied to V_{DD}) 29
Time-out Sequence on Power-up ($\overline{MCLR}$ Not Tied to V_{DD})
Case 1 28
Case 2 28
Time-out Sequence on Power-up ($\overline{MCLR}$ Tied to V_{DD}) 28
Timer0 and Timer1 External Clock 346
Transition Between Timer1 and OSC1 (HS with PLL) 22
Transition Between Timer1 and OSC1 (HS, XT, LP) 21
Transition Between Timer1 and OSC1 (RC, EC) 22
Transition from OSC1 to Timer1 Oscillator 21
USART Asynchronous Reception 192
USART Asynchronous Transmission 190
USART Asynchronous Transmission (Back to Back) 190
USART Synchronous Receive (Master/Slave) 357
USART Synchronous Reception (Master Mode, SREN) 195
USART Synchronous Transmission 194
USART Synchronous Transmission (Master/Slave) 357
USART Synchronous Transmission (Through TXEN) 194
Wake-up from SLEEP via Interrupt 275
Timing Diagrams and Specifications 343
A/D Conversion Requirements 359
A/D Converter Characteristics 358
Capture/Compare/PWM Requirements (CCP1 and ECCP1) 347
CLKO and I/O Timing Requirements 344
Example SPI Mode Requirements (Master Mode, CKE = 0) 349
Example SPI Mode Requirements (Master Mode, CKE = 1) 350

Example SPI Mode Requirements (Slave Mode, CKE = 0) 351
Example SPI Slave Mode Requirements (CKE = 1) 352
External Clock Timing Requirements 343
I2C Bus Data Requirements (Slave Mode) 354
I2C Bus START/STOP Bits Requirements (Slave Mode) 353
Master SSP I2C Bus Data Requirements 356
Master SSP I2C Bus START/STOP Bits Requirements 355
Parallel Slave Port Requirements (PIC18F248 and PIC18F458) 348
RESET, Watchdog Timer, Oscillator Start-up Timer, Power-up Timer, Brown-out Reset and Low Voltage Detect Requirements 345
Timer0 and Timer1 External Clock Requirements 346
USART Synchronous Receive Requirements 357
USART Synchronous Transmission Requirements 357
PWM Direction Change 139
Timing Specifications
PLL Clock 344
TSTFSZ 321
TXSTA Register
BRGH Bit 185

U

USART 183
Asynchronous Mode 189
Reception 191
Setting Up 9-bit Mode with Address Detect 191
Transmission 189
Asynchronous Reception 192
Asynchronous Transmission
Associated Registers 190
Baud Rate Generator (BRG) 185
Associated Registers 185
Baud Rate Error, Calculating 185
Baud Rate Formula 185
Baud Rates for Asynchronous Mode (BRGH = 0) 187
Baud Rates for Asynchronous Mode (BRGH = 1) 188
Baud Rates for Synchronous Mode 186
High Baud Rate Select (BRGH Bit) 185
Sampling 185
Serial Port Enable (SPEN) Bit 183
Synchronous Master Mode 193
Reception 195
Transmission 193
Synchronous Master Reception
Associated Registers 195
Synchronous Master Transmission
Associated Registers 193
Synchronous Slave Mode 196
Reception 196
Transmit 196
Synchronous Slave Reception 197
Synchronous Slave Transmission
Associated Registers 197

V

Voltage Reference Specifications 340

W

Wake-up from SLEEP 265, 274
Using Interrupts 274
Watchdog Timer (WDT) 265, 272
Associated Registers 273
Control Register 272
Postscaler 273
Programming Considerations 66, 272
RC Oscillator 272
Time-out Period 272
WCOL 171, 173, 176
WCOL Status Flag 171
WDT. See Watchdog Timer. 272
WWW, On-Line Support 5

X

XORLW 321
XORWF 322

© 2003 Microchip Technology Inc.

ON-LINE SUPPORT

Microchip provides on-line support on the Microchip World Wide Web site.

The web site is used by Microchip as a means to make files and information easily available to customers. To view the site, the user must have access to the Internet and a web browser, such as Netscape® or Microsoft® Internet Explorer. Files are also available for FTP download from our FTP site.

Connecting to the Microchip Internet Web Site

The Microchip web site is available at the following URL:

www.microchip.com

The file transfer site is available by using an FTP service to connect to:

ftp://ftp.microchip.com

The web site and file transfer site provide a variety of services. Users may download files for the latest Development Tools, Data Sheets, Application Notes, User's Guides, Articles and Sample Programs. A variety of Microchip specific business information is also available, including listings of Microchip sales offices, distributors and factory representatives. Other data available for consideration is:

- Latest Microchip Press Releases
- Technical Support Section with Frequently Asked Questions
- Design Tips
- Device Errata
- Job Postings
- Microchip Consultant Program Member Listing
- Links to other useful web sites related to Microchip Products
- Conferences for products, Development Systems, technical information and more
- Listing of seminars and events

SYSTEMS INFORMATION AND UPGRADE HOT LINE

The Systems Information and Upgrade Line provides system users a listing of the latest versions of all of Microchip's development systems software products. Plus, this line provides information on how customers can receive the most current upgrade kits.The Hot Line Numbers are:

1-800-755-2345 for U.S. and most of Canada, and

1-480-792-7302 for the rest of the world.

092002

READER RESPONSE

It is our intention to provide you with the best documentation possible to ensure successful use of your Microchip product. If you wish to provide your comments on organization, clarity, subject matter, and ways in which our documentation can better serve you, please FAX your comments to the Technical Publications Manager at (480) 792-4150.

Please list the following information, and use this outline to provide us with your comments about this document.

To: Technical Publications Manager Total Pages Sent _____

RE: Reader Response

From: Name _____

Company _____

Address _____

City / State / ZIP / Country _____

Telephone: (_____) _____ - _____ FAX: (_____) _____ - _____

Application (optional):

Would you like a reply? ___Y ___N

Device: PIC18FXX8 Literature Number: DS41159C

Questions:

1. What are the best features of this document?

2. How does this document meet your hardware and software development needs?

3. Do you find the organization of this document easy to follow? If not, why?

4. What additions to the document do you think would enhance the structure and subject?

5. What deletions from the document could be made without affecting the overall usefulness?

6. Is there any incorrect or misleading information (what and where)?

7. How would you improve this document?

© 2003 Microchip Technology Inc.

PIC18FXX8 PRODUCT IDENTIFICATION SYSTEM

To order or obtain information, e.g., on pricing or delivery, refer to the factory or the listed sales office.

PART NO.	X	/XX	XXX
Device	Temperature Range	Package	Pattern

Device	PIC18F248/258[1], PIC18F448/458[1], PIC18F248/258T[2], PIC18F448/458T[2]; VDD range 4.2V to 5.5V PIC18LF248/258[1], PIC18LF448/458[1], PIC18LF248/258T[2], PIC18LF448/458T[2]; VDD range 2.0V to 5.5V
Temperature Range	I = -40°C to +85°C (Industrial) E = -40°C to +125°C (Extended)
Package	PT = TQFP (Thin Quad Flatpack) L = PLCC SO = SOIC SP = Skinny Plastic DIP P = PDIP
Pattern	QTP, SQTP, Code or Special Requirements (blank otherwise)

Examples:

a) PIC18LF258 - I/L 301 = Industrial temp., PLCC package, Extended VDD limits, QTP pattern #301.

b) PIC18LF458 - I/PT = Industrial temp., TQFP package, Extended VDD limits.

c) PIC18F258 - E/L = Extended temp., PLCC package, normal VDD limits.

Note 1: F = Standard Voltage Range
LF = Wide Voltage Range
2: T = in tape and reel PLCC, and TQFP packages only.

Sales and Support

Data Sheets
Products supported by a preliminary Data Sheet may have an errata sheet describing minor operational differences and recommended workarounds. To determine if an errata sheet exists for a particular device, please contact one of the following:

1. Your local Microchip sales office
2. The Microchip Corporate Literature Center U.S. FAX: (480) 792-7277
3. The Microchip Worldwide Site (www.microchip.com)

Please specify which device, revision of silicon and Data Sheet (include Literature #) you are using.

New Customer Notification System
Register on our web site (www.microchip.com/cn) to receive the most current information on our products.

WORLDWIDE SALES AND SERVICE

AMERICAS

Corporate Office
2355 West Chandler Blvd.
Chandler, AZ 85224-6199
Tel: 480-792-7200 Fax: 480-792-7277
Technical Support: 480-792-7627
Web Address: http://www.microchip.com

Rocky Mountain
2355 West Chandler Blvd.
Chandler, AZ 85224-6199
Tel: 480-792-7966 Fax: 480-792-4338

Atlanta
3780 Mansell Road, Suite 130
Alpharetta, GA 30022
Tel: 770-640-0034 Fax: 770-640-0307

Boston
2 Lan Drive, Suite 120
Westford, MA 01886
Tel: 978-692-3848 Fax: 978-692-3821

Chicago
333 Pierce Road, Suite 180
Itasca, IL 60143
Tel: 630-285-0071 Fax: 630-285-0075

Dallas
4570 Westgrove Drive, Suite 160
Addison, TX 75001
Tel: 972-818-7423 Fax: 972-818-2924

Detroit
Tri-Atria Office Building
32255 Northwestern Highway, Suite 190
Farmington Hills, MI 48334
Tel: 248-538-2250 Fax: 248-538-2260

Kokomo
2767 S. Albright Road
Kokomo, Indiana 46902
Tel: 765-864-8360 Fax: 765-864-8387

Los Angeles
18201 Von Karman, Suite 1090
Irvine, CA 92612
Tel: 949-263-1888 Fax: 949-263-1338

San Jose
Microchip Technology Inc.
2107 North First Street, Suite 590
San Jose, CA 95131
Tel: 408-436-7950 Fax: 408-436-7955

Toronto
6285 Northam Drive, Suite 108
Mississauga, Ontario L4V 1X5, Canada
Tel: 905-673-0699 Fax: 905-673-6509

ASIA/PACIFIC

Australia
Microchip Technology Australia Pty Ltd
Suite 22, 41 Rawson Street
Epping 2121, NSW
Australia
Tel: 61-2-9868-6733 Fax: 61-2-9868-6755

China - Beijing
Microchip Technology Consulting (Shanghai) Co., Ltd., Beijing Liaison Office
Unit 915
Bei Hai Wan Tai Bldg.
No. 6 Chaoyangmen Beidajie
Beijing, 100027, No. China
Tel: 86-10-85282100 Fax: 86-10-85282104

China - Chengdu
Microchip Technology Consulting (Shanghai) Co., Ltd., Chengdu Liaison Office
Rm. 2401-2402, 24th Floor,
Ming Xing Financial Tower
No. 88 TIDU Street
Chengdu 610016, China
Tel: 86-28-86766200 Fax: 86-28-86766599

China - Fuzhou
Microchip Technology Consulting (Shanghai) Co., Ltd., Fuzhou Liaison Office
Unit 28F, World Trade Plaza
No. 71 Wusi Road
Fuzhou 350001, China
Tel: 86-591-7503506 Fax: 86-591-7503521

China - Hong Kong SAR
Microchip Technology Hongkong Ltd.
Unit 901-6, Tower 2, Metroplaza
223 Hing Fong Road
Kwai Fong, N.T., Hong Kong
Tel: 852-2401-1200 Fax: 852-2401-3431

China - Shanghai
Microchip Technology Consulting (Shanghai) Co., Ltd.
Room 701, Bldg. B
Far East International Plaza
No. 317 Xian Xia Road
Shanghai, 200051
Tel: 86-21-6275-5700 Fax: 86-21-6275-5060

China - Shenzhen
Microchip Technology Consulting (Shanghai) Co., Ltd., Shenzhen Liaison Office
Rm. 1812, 18/F, Building A, United Plaza
No. 5022 Binhe Road, Futian District
Shenzhen 518033, China
Tel: 86-755-82901380 Fax: 86-755-82966626

China - Qingdao
Rm. B503, Fullhope Plaza,
No. 12 Hong Kong Central Rd.
Qingdao 266071, China
Tel: 86-532-5027355 Fax: 86-532-5027205

India
Microchip Technology Inc.
India Liaison Office
Divyasree Chambers
1 Floor, Wing A (A3/A4)
No. 11, O'Shaugnessey Road
Bangalore, 560 025, India
Tel: 91-80-2290061 Fax: 91-80-2290062

Japan
Microchip Technology Japan K.K.
Benex S-1 6F
3-18-20, Shinyokohama
Kohoku-Ku, Yokohama-shi
Kanagawa, 222-0033, Japan
Tel: 81-45-471- 6166 Fax: 81-45-471-6122

Korea
Microchip Technology Korea
168-1, Youngbo Bldg. 3 Floor
Samsung-Dong, Kangnam-Ku
Seoul, Korea 135-882
Tel: 82-2-554-7200 Fax: 82-2-558-5934

Singapore
Microchip Technology Singapore Pte Ltd.
200 Middle Road
#07-02 Prime Centre
Singapore, 188980
Tel: 65-6334-8870 Fax: 65-6334-8850

Taiwan
Microchip Technology (Barbados) Inc., Taiwan Branch
11F-3, No. 207
Tung Hua North Road
Taipei, 105, Taiwan
Tel: 886-2-2717-7175 Fax: 886-2-2545-0139

EUROPE

Austria
Microchip Technology Austria GmbH
Durisolstrasse 2
A-4600 Wels
Austria
Tel: 43-7242-2244-399
Fax: 43-7242-2244-393

Denmark
Microchip Technology Nordic ApS
Regus Business Centre
Lautrup hoj 1-3
Ballerup DK-2750 Denmark
Tel: 45 4420 9895 Fax: 45 4420 9910

France
Microchip Technology SARL
Parc d'Activite du Moulin de Massy
43 Rue du Saule Trapu
Batiment A - ler Etage
91300 Massy, France
Tel: 33-1-69-53-63-20 Fax: 33-1-69-30-90-79

Germany
Microchip Technology GmbH
Steinheilstrasse 10
D-85737 Ismaning, Germany
Tel: 49-89-627-144 0 Fax: 49-89-627-144-44

Italy
Microchip Technology SRL
Centro Direzionale Colleoni
Palazzo Taurus 1 V. Le Colleoni 1
20041 Agrate Brianza
Milan, Italy
Tel: 39-039-65791-1 Fax: 39-039-6899883

United Kingdom
Microchip Ltd.
505 Eskdale Road
Winnersh Triangle
Wokingham
Berkshire, England RG41 5TU
Tel: 44 118 921 5869 Fax: 44-118 921-5820

12/05/02

© 2003 Microchip Technology Inc.