QUICKSWITCH® PRODUCTS HIGH-SPEED CMOS QUADRUPLE BUS SWITCH WITH INDIVIDUAL ACTIVE LOW ENABLES

IDTQS3125

FEATURES:

- Enhanced N channel FET with no inherent diode to Vcc
- Pin compatible with the 74'125 function
- Zero propagation delay, zero added ground bounce
- Undershoot clamp diodes on all switch and control inputs
- Available in QSOP and SOIC Packages

APPLICATIONS

- Hot-swapping, hot-docking
- Voltage translation (5V to 3.3V)
- Power conservation
- Capacitance reduction and isolation (mass storage, work stations)
- Logic replacement (data processing)
- Clock gating
- Bus isolation

DESCRIPTION:

The QS3125 provides a set of four high-speed low resistance CMOS switches connecting inputs to outputs without propagation delay and without generating additional ground bounce noise. Individual enables ($\overline{OE}$) are used to turn on the switches. The QS3125 is ideal for signal and control switching since the device adds no noise, ground bounce, propagation delay, or significant power consumption to the system. The QS3125 can also be used for analog switching applications such as video.

QuickSwitch devices provide an order of magnitude faster speed than conventional logic devices.

The QS3125 is characterized for operation at -40°C to +85°C.

FUNCTIONAL BLOCK DIAGRAM

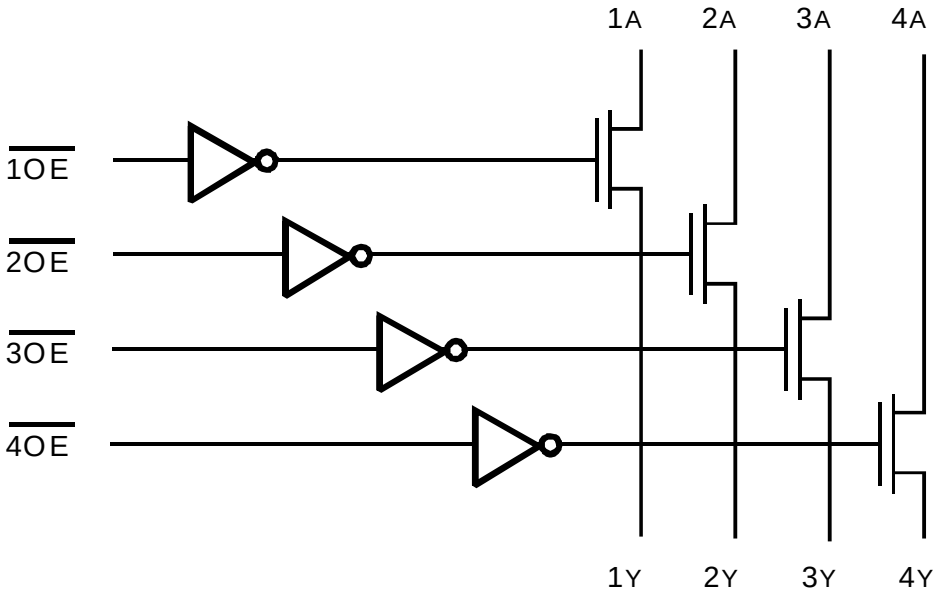

INDUSTRIAL TEMPERATURE RANGE **DECEMBER 1999**

 DSC-5598/-

PIN CONFIGURATION

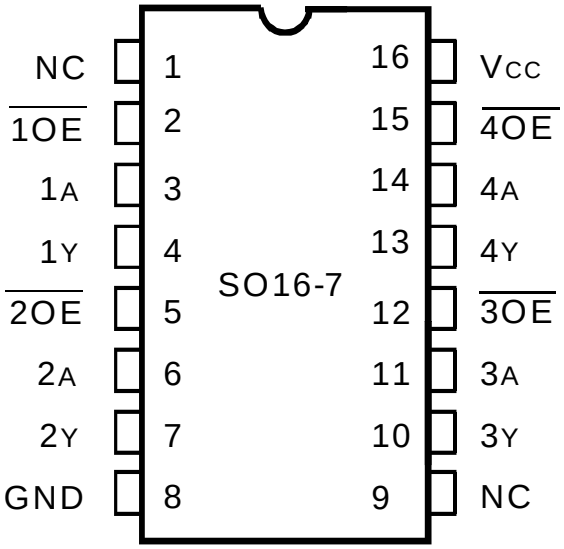

QSOP
TOP VIEW

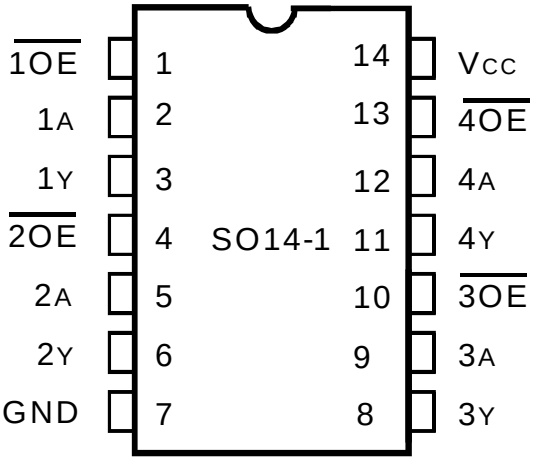

SOIC
TOP VIEW

ABSOLUTE MAXIMUM RATINGS (1)

Symbol	Description	Max.	Unit
V_{TERM}(2)	Supply Voltage to Ground	– 0.5 to +7	V
V_{TERM}(3)	DC Switch Voltage V_S	– 0.5 to +7	V
V_{TERM}(3)	DC Input Voltage V_{IN}	– 0.5 to +7	V
V_{AC}	AC Input Voltage (pulse width ≤20ns)	-3	V
I_{OUT}	DC Output Current	120	mA
P_{MAX}	Maximum Power Dissipation (T_A = 85°C)	0.5	W
T_{STG}	Storage Temperature	– 65 to +150	°C

NOTES:
1. Stresses greater than those listed under ABSOLUTE MAXIMUM RATINGS may cause permanent damage to the device. This is a stress rating only and functional operation of the device at these or any other conditions above those indicated in the operational sections of this specification is not implied. Exposure to absolute maximum rating conditions for extended periods may affect reliability.
2. Vcc Terminals.
3. All terminals except Vcc.

CAPACITANCE

(T_A = +25°C, f = 1.0MHz, V_{IN} = 0V, V_{OUT} = 0V)

Pins	Typ.	Max. (1)	Unit
$\overline{OE}$ (Inputs)	3	5	pF
Quickswitch Channels (Switch OFF)	5	7	pF

NOTE:
1. This parameter is guaranteed but not production tested.

PIN DESCRIPTION

Pin Names	I/O	Description
1A - 4A	I/O	Bus A
1Y - 4Y	I/O	Bus B
$\overline{1OE}$ - $\overline{4OE}$	I	Bus Switch Enable

FUNCTION TABLE(1)

$\overline{nOE}$	nA	nY	Function
L	H	H	Connect
L	L	L	Connect
H	X	X	Disconnect

NOTE:
1. H = HIGH Voltage Level
   L = LOW Voltage Level
   X = Don't Care

DC ELECTRICAL CHARACTERISTICS OVER OPERATING RANGE

Following Conditions Apply Unless Otherwise Specified:
Industrial: T_A = -40°C to +85°C, V_{CC} = 5.0V ± 5%

Symbol	Parameter	Test Conditions	Min.	Typ.(1)	Max.	Unit
V_{IH}	Input HIGH Voltage	Guaranteed Logic HIGH for Control Pins	2	—	—	V
V_{IL}	Input LOW Voltage	Guaranteed Logic LOW for Control Pins	—	—	0.8	V
I_{IN}	Input Leakage Current (Control Inputs)	0V ≤ V_{IN} ≤ Vcc	—	—	±1	µA
I_{OZ}	Off-State Current (Hi-Z)	0V ≤ V_{OUT} ≤ Vcc, Switches OFF	—	—	±1	µA
R_{ON}	Switch ON Resistance	Vcc = Min., V_{IN} = 0V, I_{ON} = 30mA	—	5	7	Ω
R_{ON}	Switch ON Resistance	Vcc = Min., V_{IN} = 2.4V, I_{ON} = 15mA	—	10	15	Ω
V_P	Pass Voltage (2)	V_{IN} = Vcc = 5V, I_{OUT} = -5µA	3.7	4	4.2	V

NOTES:
1. Typical values are at V_{CC} = 5.0V, T_A = 25°C.
2. Pass voltage is guaranteed but not production tested.

TYPICAL ON RESISTANCE vs V_{IN} AT Vcc = 5V

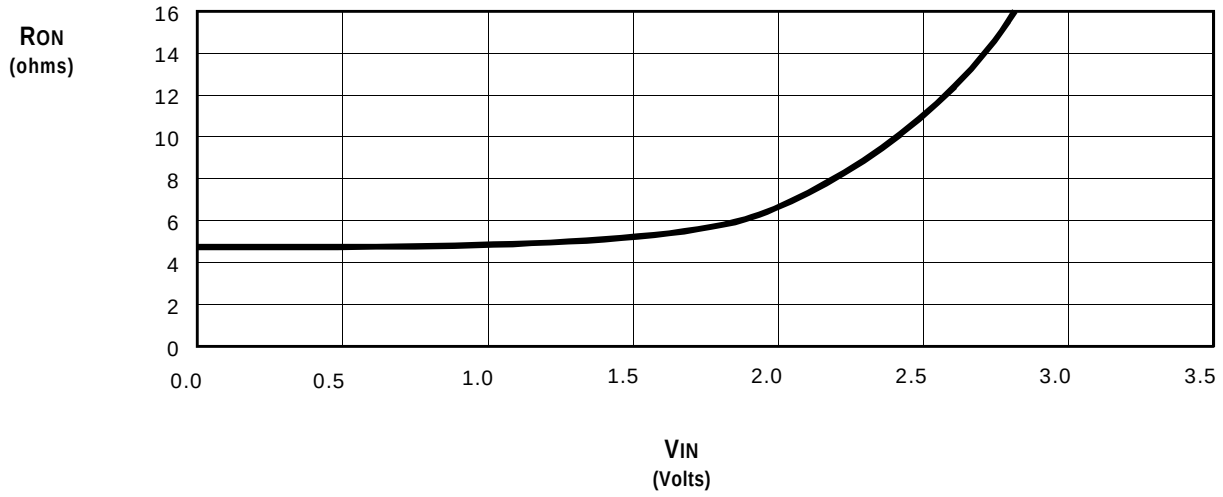

POWER SUPPLY CHARACTERISTICS

Symbol	Parameter	Test Conditions[1]	Max.	Unit
I_{CCQ}	Quiescent Power Supply Current	V_{CC} = Max., V_{IN} = GND or Vcc, f = 0	3	µA
ΔI_{CC}	Power Supply Current per Control Input HIGH [2]	V_{CC} = Max., V_{IN} = 3.4V, f = 0	2.5	mA
I_{CCD}	Dynamic Power Supply Current per MHz[3]	V_{CC} = Max., A and Y pins open Control Inputs Toggling at 50% Duty Cycle	0.25	mA/MHz

NOTES:
1. For conditions shown as Min. or Max., use the appropriate values specified under DC Electrical Characteristics.
2. Per TLL driven input (V_{IN} = 3.4V, control inputs only). A and Y pins do not contribute to ΔIcc.
3. This current applies to the control inputs only and represents the current required to switch internal capacitance at the specified frequency. The A and Y inputs generate no significant AC or DC currents as they transition. This parameter is guaranteed but not production tested.

SWITCHING CHARACTERISTICS OVER OPERATING RANGE

T_A = -40°C to +85°C, V_{CC} = 5.0V ± 5%
C_{LOAD} = 50pF, R_{LOAD} = 500Ω unless otherwise noted.

Symbol	Parameter	Min. [1]	Typ.	Max.	Unit
t_{PLH} t_{PHL}	Data Propagation Delay [2,3] A to Y	—	—	0.25 [3]	ns
t_{PZH} t_{PZL}	Switch Turn-on Delay $\overline{OE}$ to nA/nY	1.5	—	6.5	ns
t_{PHZ} t_{PLZ}	Switch Turn-off Delay [2] $\overline{OE}$ to nA/nY	1.5	—	5.5	ns

NOTES:
1. Minimums are guaranteed but not production tested.
2. This parameter is guaranteed but not production tested.
3. The bus switch contributes no propagation delay other than the RC delay of the ON resistance of the switch and the load capacitance. The time constant for the switch alone is of the order of 0.25ns for C_L = 50pF. Since this time constant is much smaller than the rise and fall times of typical driving signals, it adds very little propagation delay to the system. Propagation delay of the bus switch, when used in a system, is determined by the driving circuit on the driving side of the switch and its interaction with the load on the driven side.

ORDERING INFORMATION

IDTQS XXXXX XX X

Device Type | Package | Process

Blank	Industrial (-40°C to +85°C)
Q	Quarter Size Outline Package (SO16-7)
S1	Small Outline IC (SO14-1)
3125	High Speed CMOS Quadruple Bus Switch with Individual Active Low Enables

CORPORATE HEADQUARTERS
2975 Stender Way
Santa Clara, CA 95054

for SALES:
800-345-7015 or 408-727-6116
fax: 408-492-8674
www.idt.com*

**To search for sales office near you, please click the sales button found on our home page or dial the 800# above and press 2.*