QUICKSWITCH® PRODUCTS HIGH-SPEED CMOS 12-BIT 3-TO-1 BUS-SELECT SWITCH

IDTQS3162214

FEATURES:

- Enhanced N channel FET with no inherent diode to Vcc
- Low propagation delay
- TTL-compatible input and output levels
- Undershoot clamp diodes on all switch and control pins
- Available in 56-pin SSOP and TSSOP Packages

APPLICATIONS

- Video, audio, graphics switching, muxing
- Hot-swapping, hot-docking
- Voltage translation (5V to 3.3V)

DESCRIPTION:

The QS3162214 provides a set of twelve high-speed CMOS TTL-compatible buses switching between three separate ports. The device operates as a 12-bit bus-select switch through the data-select (S0-S2) terminals.

The QS3162214 adds an internal 25Ω series termination resistor to reduce reflection noise in high speed applications. When closed, the switch acts as the source (series) termination for the driver connected to it.

Mux/Demux devices provide an order of magnitude faster speed than equivalent logic devices.

The QS3162214 is characterized for operation at -40°C to +85°C.

FUNCTIONAL BLOCK DIAGRAM

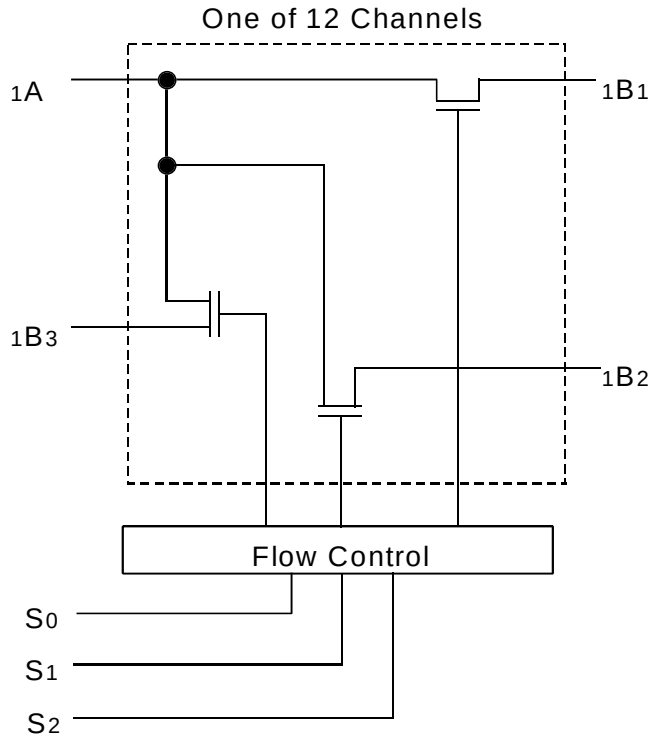

INDUSTRIAL TEMPERATURE RANGE **NOVEMBER 1999**

 DSC-5560/-

PIN CONFIGURATION

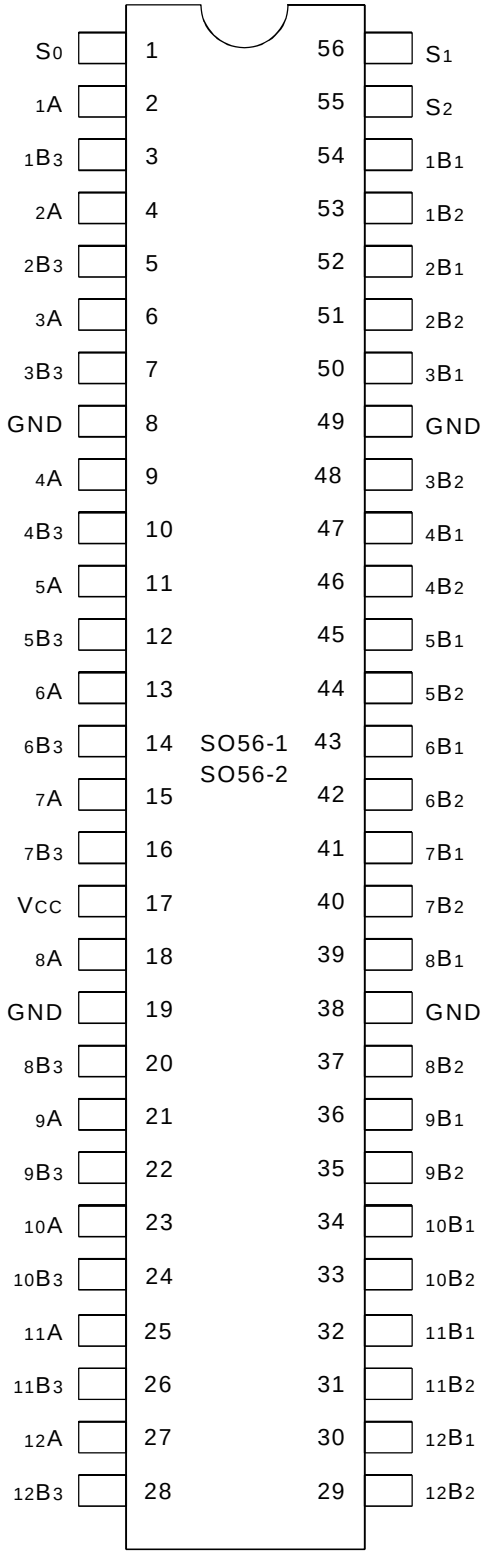

SSOP/ TSSOP
TOP VIEW

ABSOLUTE MAXIMUM RATINGS (1)

Symbol	Description	Max.	Unit
V_{TERM}(2)	Supply Voltage to Ground	– 0.5 to +7	V
V_{TERM}(3)	DC Switch Voltage V_S	– 0.5 to +7	V
V_{TERM}(3)	DC Input Voltage V_{IN}	– 0.5 to +7	V
V_{AC}	AC Input Voltage (pulse width ≤20ns)	-3	V
I_{OUT}	DC Output Current	120	mA
P_{MAX}	Maximum Power Dissipation (T_A = 85°C)	.93	W
T_{STG}	Storage Temperature	– 65 to +150	°C

NOTES:
1. Stresses greater than those listed under ABSOLUTE MAXIMUM RATINGS may cause permanent damage to the device. This is a stress rating only and functional operation of the device at these or any other conditions above those indicated in the operational sections of this specification is not implied. Exposure to absolute maximum rating conditions for extended periods may affect reliability.
2. Vcc Terminals.
3. All terminals except Vcc.

CAPACITANCE

(T_A = +25°C, f = 1.0MHz, V_{IN} = 0V, V_{OUT} = 0V)

Pins		Typ.	Max. (1)	Unit
Control Inputs		5	5.5	pF
Quickswitch Channels (Switch OFF)	Demux	10	12	pF
	Mux	6	7	pF

NOTE:
1. This parameter is guaranteed but not production tested.

PIN DESCRIPTION

Pin Names	I/O	Description
1A - 12A	I/O	Bus A
1Bn - 12Bn	I/O	Bus B
S_0 - S_2	I	Data Select

FUNCTION TABLE(1)

S_2	S_1	S_0	xA	Function
L	L	L	Z	Disconnect
L	L	H	xB_1	xA to xB_1
L	H	L	xB_2	xA to xB_2
L	H	H	Z	Disconnect
H	L	L	Z	Disconnect
H	L	H	xB_3	xA to xB_3
H	H	L	xB_1	xA to xB_1
H	H	H	xB_2	xA to xB_2

NOTE:
1. H = HIGH Voltage Level
   L = LOW Voltage Level
   Z = High-Impedence

DC ELECTRICAL CHARACTERISTICS OVER OPERATING RANGE

Following Conditions Apply Unless Otherwise Specified:
Industrial: T_A = -40°C to +85°C, V_{CC} = 5.0V ± 10%

Symbol	Parameter	Test Conditions	Min.	Typ.(1)	Max.	Unit
V_{IH}	Input HIGH Voltage	Guaranteed Logic HIGH for Control Pins	2	—	—	V
V_{IL}	Input LOW Voltage	Guaranteed Logic LOW for Control Pins	—	—	0.8	V
I_{IN}	Input Leakage Current (Control Inputs)	0V ≤ V_{IN} ≤ Vcc	—	—	±1	µA
I_{OZ}	Off-State Current (Hi-Z)	0V ≤ V_{OUT} ≤ Vcc	—	—	±1	µA
R_{ON}	Switch ON Resistance	Vcc = Min., V_{IN} = 0V, I_{ON} = 30mA	22	30	42	Ω
R_{ON}	Switch ON Resistance	Vcc = Min., V_{IN} = 2.4V, I_{ON} = 15mA	22	37	50	Ω
V_P	Pass Voltage (2)	V_{IN} = Vcc = 5V, I_{OUT} = -5µA	3.7	4	4.2	V

NOTES:
1. Typical values are at V_{CC} = 5.0V, T_A = 25°C.
2. Pass voltage is guaranteed but not production tested.

TYPICAL ON RESISTANCE vs V_{IN} AT Vcc = 5V

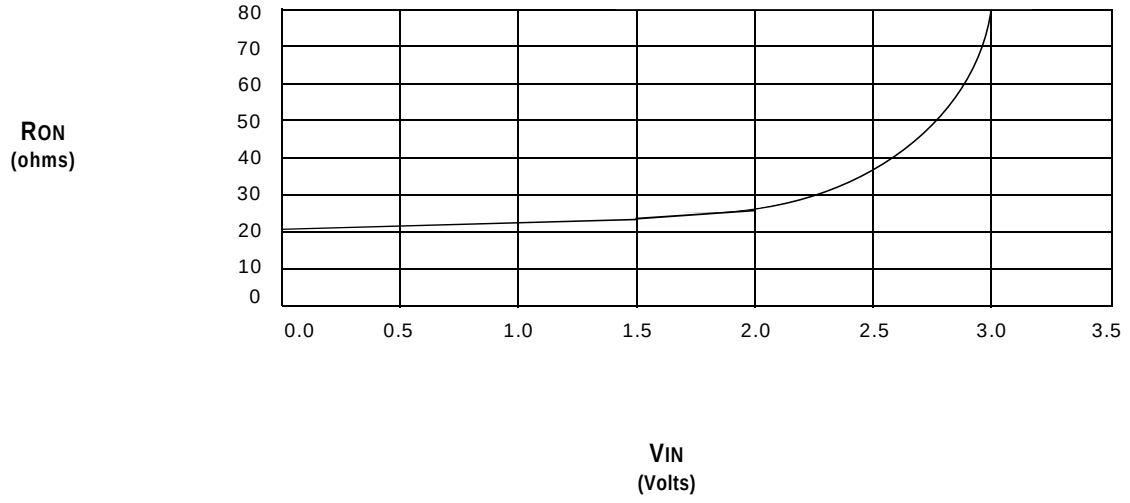

POWER SUPPLY CHARACTERISTICS

Symbol	Parameter	Test Conditions[1]	Max.	Unit
I_{CCQ}	Quiescent Power Supply Current	V_{CC} = Max., V_{IN} = GND or Vcc, f = 0	3	µA
ΔI_{CC}	Power Supply Current per Control Input HIGH [2]	V_{CC} = Max., V_{IN} = 3.4V, f = 0	2.5	mA
I_{CCD}	Dynamic Power Supply Current per MHz[3]	V_{CC} = Max., A and B pins open Control Input Toggling at 50% Duty Cycle	0.25	mA/MHz

NOTES:
1. For conditions shown as Min. or Max., use the appropriate values specified under DC Electrical Characteristics.
2. Per TLL driven input (V_{IN} = 3.4V, control inputs only). A and B pins do not contribute to ΔI_{CC}.
3. This current applies to the control inputs only and represents the current required to switch internal capacitance at the specified frequency. The A and B inputs generate no significant AC or DC currents as they transition. This parameter is guaranteed but not production tested.

SWITCHING CHARACTERISTICS OVER OPERATING RANGE

T_A = -40°C to +85°C, V_{CC} = 5.0V ± 10%
C_{LOAD} = 50pF, R_{LOAD} = 500Ω unless otherwise noted.

Symbol	Parameter	Min.	Typ. [1]	Max.	Unit
t_{PLH} t_{PHL}	Data Propagation Delay [2,4] xA to xBn, xBn to xA	—	—	1.25 [3]	ns
t_{PZL} t_{PZH}	Switch Turn-on Delay Sn to xA, xBn	1.5	—	7.5	ns
t_{PLZ} t_{PHZ}	Switch Turn-off Delay [2] Sn to xA, xBn	1.5	—	5.8	ns

NOTES:
1. Minimums are guaranteed but not production tested.
2. This parameter is guaranteed but not production tested.
3. The time constant for the switch alone is of the order of 1.25ns for C_L = 50pF.
4. The bus switch contributes no propagation delay other than the RC delay of the ON resistance of the switch and the load capacitance. Since this time constant is much smaller than the rise and fall times of typical driving signals, it adds very little propagation delay to the system. Propagation delay of the bus switch, when used in a system, is determined by the driving circuit on the driving side of the switch and its interaction with the load on the driven side.

ORDERING INFORMATION

IDTQS XXXXX XX

Device Type: 3162214 — High Speed CMOS 12-Bit 3-to-1 Bus-Select Switch

Package:
- PV — Shrink Small Outline Package (SO56-1)
- PA — Thin Shrink Small Outline Package (SO56-2)

CORPORATE HEADQUARTERS
2975 Stender Way
Santa Clara, CA 95054

for SALES:
800-345-7015 or 408-727-6116
fax: 408-492-8674
www.idt.com*

**To search for sales office near you, please click the sales button found on our home page or dial the 800# above and press 2.*