GUARANTEED LOW SKEW CMOS CLOCK DRIVER/BUFFER

QS5806/A

FEATURES:

- 10 CMOS outputs
- Monitor output
- Rail-to-rail output voltage swing
- Input hysteresis for better noise margin
- Guaranteed low skew:
  - 0.7ns output skew (same bank)
  - 0.9ns output skew (different banks)
  - 1.5ns part-to-part skew
- Std. and A speed grades
- Available in QSOP and SOIC packages

DESCRIPTION

The QS5806 clock buffer/driver circuits can be used for clock buffering schemes where low skew is a key parameter. This device offers two banks of five non-inverting outputs. The QS5806 device provides low propagation delay buffering with on-chip skew of 0.7ns for same-transition, same-bank signals.

The QS5806 is characterized for operation at -40°C to +85°C.

FUNCTIONAL BLOCK DIAGRAM

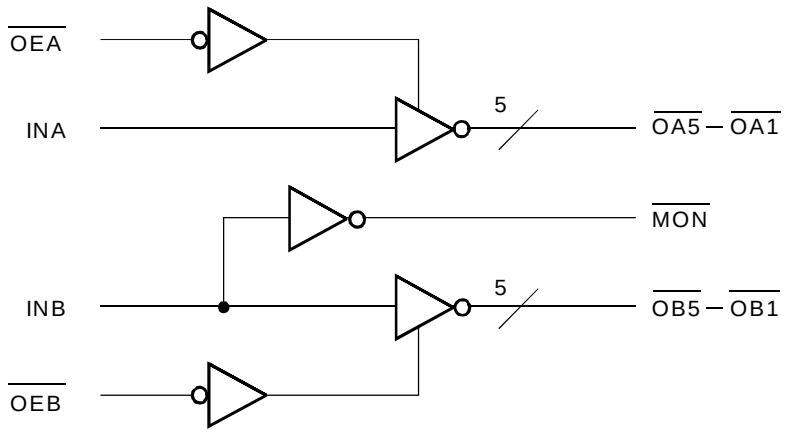

INDUSTRIAL TEMPERATURE RANGE **JULY 2000**

© 1999 Integrated Device Technology, Inc. DSC-4943/-

PIN CONFIGURATION

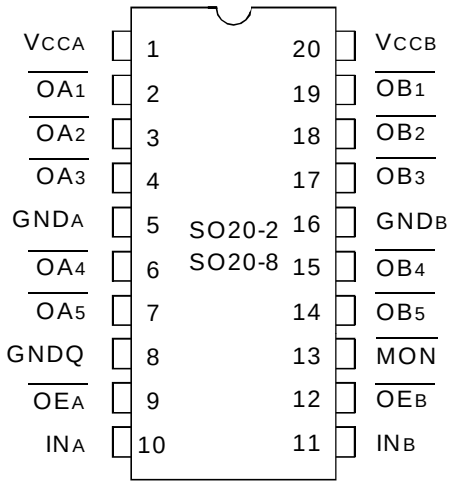

QSOP/ SOIC
TOP VIEW

ABSOLUTE MAXIMUM RATINGS (1)

Symbol	Description	Max.	Unit
V_{TERM}(2)	Supply Voltage to Ground	– 0.5 to +7	V
	DC Output Voltage V_{OUT}	– 0.5 to +7	V
V_{TERM}(3)	DC Input Voltage V_{IN}	– 0.5 to +7	V
V_{AC}	AC Input Voltage (pulse width ≤20ns)	-3	V
I_{OUT}	DC Output Current V_{IN} < 0	-20	mA
	DC Output Current Max. Sink Current/Pin	120	mA
T_{STG}	Storage Temperature	– 65 to +150	°C
T_J	Junction Temperature	150	°C

NOTES:
1. Stresses greater than those listed under ABSOLUTE MAXIMUM RATINGS may cause permanent damage to the device. This is a stress rating only and functional operation of the device at these or any other conditions above those indicated in the operational sections of this specification is not implied. Exposure to absolute maximum rating conditions for extended periods may affect reliability.
2. Vcc Terminals.
3. All terminals except Vcc.

CAPACITANCE (T_A = +25°C, f = 1.0MHz, V_{IN} = 0V)

Pins	QSOP		SOIC		Unit
	Typ.	Max. (1)	Typ.	Max. (1)	
C_{IN}	4	6	5	7	pF
C_{OUT}	7	9	7	9	pF

NOTE:
1. This parameter is guaranteed but not production tested.

PIN DESCRIPTION

Pin Names	I/O	Description
$\overline{OEA}$, $\overline{OEB}$	I	Output Enable Inputs
INA, INB	I	Clock Inputs
$\overline{OAn}$, $\overline{OBn}$	O	Clock Outputs
$\overline{MON}$	O	Monitor Outputs (non-disable)

DC ELECTRICAL CHARACTERISTICS OVER OPERATING RANGE

Following Conditions Apply Unless Otherwise Specified:
Industrial: T_A = -40°C to +85°C, V_{CC} = 5.0V ± 10%, V_{HC} = V_{CC} - 0.2V, V_{LC} = 0.2V

Symbol	Parameter	Test Conditions	Min.	Typ.(1)	Max.	Unit
V_{IH}	Input HIGH Voltage	Guaranteed Logic HIGH for All Inputs	2	—	—	V
V_{IL}	Input LOW Voltage	Guaranteed Logic LOW for All Inputs	—	—	0.8	V
V_{IC}	Clamp Diode Voltage (3)	Vcc = Min., I_{IN} = -18mA	—	–0.7	–1.2	V
V_{OH}	Output HIGH Voltage	Vcc = Min., V_{IN} = V_{IH} or V_{IL}, I_{OH} = -300µA	V_{HC}	Vcc	—	V
		Vcc = Min., V_{IN} = V_{IH} or V_{IL}, I_{OH} = -15mA	3.6	4.3	—	
		Vcc = Min., V_{IN} = V_{IH} or V_{IL}, I_{OH} = -24mA	2.4	3.8	—	
V_{OL}	Output LOW Voltage	Vcc = Min., V_{IN} = V_{IH} or V_{IL}, I_{OL} = 300µA	—	GND	V_{LC}	V
		Vcc = Min., V_{IN} = V_{IH} or V_{IL}, I_{OL} = 64mA	—	0.3	0.55	
I_{IN}	Input Leakage Current	Vcc = Max., V_{IN} = Vcc or GND	—	—	±1	µA
I_{OZ}	Output Leakage Current	Vcc = Max., V_{OUT} = Vcc or GND	—	—	±1	µA
I_{OFF}	Input Power Off Leakage	Vcc = 0V, V_{IN} = Vcc or GND	—	—	±1	µA
I_{OS}	Short Circuit Current (2,3)	Vcc = Max., V_{OUT} = GND	–60	—	—	mA
ΔV_T	Input Hysteresis	V_{TLH} - V_{THL} for All Inputs	—	0.2	—	V

NOTES:
1. Typical values are at V_{CC} = 5.0V, T_A = 25°C.
2. Not more than one output should be used to test this high power condition. Duration is less than one second.
3. Guaranteed by design but not tested.

POWER SUPPLY CHARACTERISTICS

Symbol	Parameter	Test Conditions (1)		Typ. (3)	Max.	Unit
I_{CC}	Quiescent Power Supply Current	V_{CC} = Max., V_{IN} = GND or Vcc		0.005	0.5	mA
ΔI_{CC}	Supply Current per Input HIGH	V_{CC} = Max., V_{IN} = 3.4V		0.5	2.5	mA
I_{CCD}	Dynamic Power Supply Current per Output (2)	V_{CC} = Max., $\overline{OEA}$ = $\overline{OEB}$ = GND Outputs Enabled, 50% duty cycle		0.1	0.2	mA/MHz
I_C	Total Supply Current Examples (2,4)	V_{CC} = Max., $\overline{OEA}$ = $\overline{OEB}$ = GND 50% duty cycle, f_I = 10MHz Five outputs toggling	V_{IN} = GND or Vcc	8.5	15.5	mA
			V_{IN} = GND or 3.4V	9	16.8	
		V_{CC} = Max., $\overline{OEA}$ = $\overline{OEB}$ = GND 50% duty cycle, f_I = 2.5MHz All outputs toggling	V_{IN} = GND or Vcc	5	8.8	
			V_{IN} = GND or 3.4V	6	11.3	

NOTES:
1. For conditions shown as Min. or Max., use the appropriate values specified under DC Electrical Characteristics.
2. Guaranteed by design but not tested. C_L = 0pF.
3. Typical values are for reference only. Conditions are V_{CC} = 5.0V, T_A = 25°C.
4. $I_C = I_{CC} + (\Delta I_{CC})(D_H)(N_T) + I_{CCD}(f_O)(N_O)$
   where:
   D_H = Input Duty Cycle
   N_T = Number of TTL HIGH inputs at D_H
   f_O = Output Frequency
   N_O = Number of outputs at f_O

SKEW CHARACTERISTICS OVER OPERATING RANGE

T_A = -40°C to +85°C, V_{CC} = 5.0V ± 10%
C_{LOAD} = 50pF, R_{LOAD} = 500Ω unless otherwise noted.

Symbol	Parameter (1)	QS5806		QS5806A		Unit
		Min.	Max.	Min.	Max.	
$t_{SK(01)}$	Skew between all outputs, same transition, same bank	—	0.7	—	0.7	ns
$t_{SK(02)}$	Skew between outputs of all banks, same transition	—	0.9	—	0.9	ns
$t_{SK(P)}$	Pulse Skew; skew between opposite transitions of the same output (t_{PHL} - t_{PLH})	—	1	—	1	ns
$t_{SK(T)}$	Part-to-part skew (2)	—	1.5	—	1.5	ns

NOTES:
1. Skew parameters are guaranteed across temperature range, but not tested. Skew parameters are measured at 0.5Vcc.
2. $t_{SK(T)}$ only applies to devices of the same transition, part type, temperature, power supply voltage, loading, package, and speed grade.

SWITCHING CHARACTERISTICS OVER OPERATING RANGE

T_A = -40°C to +85°C, V_{CC} = 5.0V ± 10%
C_{LOAD} = 50pF, R_{LOAD} = 500Ω unless otherwise noted.

Symbol	Parameter (1)		QS5806		QS5806A		Unit
			Min.	Max.	Min.	Max.	
t_{PLH} t_{PHL}	Propagation Delay (2) INA to OAn, INB to OBn		1.5	5.6	1.5	5.3	ns
t_{PZL} t_{PZH}	Output Enable Time		1.5	8	1.5	8	ns
t_{PLZ} t_{PZH}	Output Disable Time		1.5	7	1.5	7	ns
t_R	Output Rise Time	0.8V to 2V (3)	—	1.5	—	1.5	ns
		0.2Vcc to 0.8Vcc	—	3	—	3	ns
t_F	Output Fall Time	0.8V to 2V (3)	—	1.5	—	1.5	ns
		0.2Vcc to 0.8Vcc	—	3	—	3	ns

NOTES:
1. Minimums guaranteed but not production tested. Timing parameters are measured at 0.5Vcc.
2. The propagation delay other range indicated by Min. and Max. specifications results from process and environmental variables. These propagation delays do not imply limit skew.
3. This parameter is guaranteed but not production tested.

TEST CIRCUITS AND WAVEFORMS

Parameter Tested	Switch Position
t_{PLZ}, t_{PZL}	Closed
All Others	Open

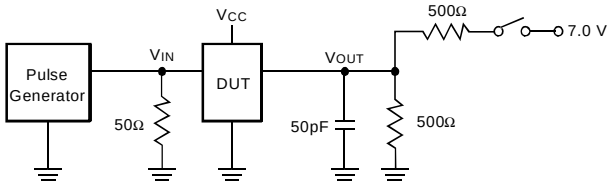

Pulse generator for all pulses: f ≤ 1.0MHz; t_F ≤ 2.5ns; t_R ≤ 2.5ns

PROPAGATION DELAY

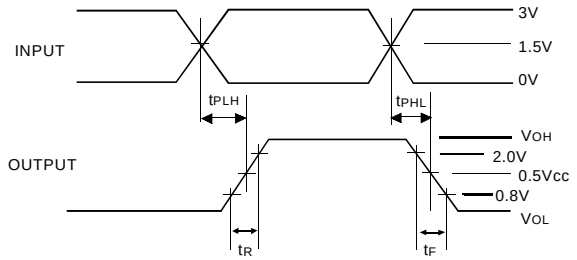

PULSE SKEW — $t_{SK(P)}$

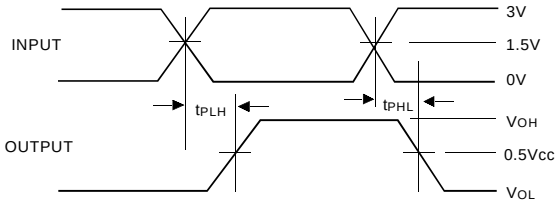

$t_{SK(p)} = |t_{PHL} - t_{PLH}|$

OUTPUT SKEW (SAME BANK) — $t_{SK(O1)}$

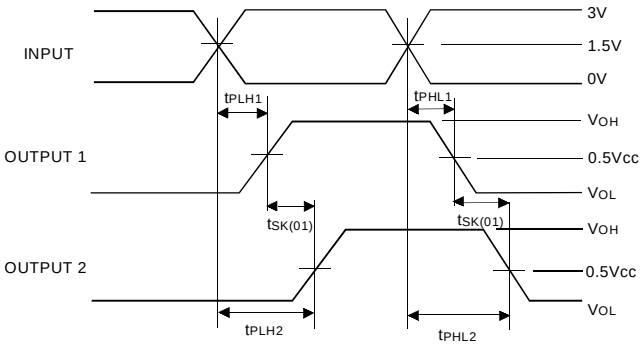

$t_{SK(01)} = |t_{PLH2} - t_{PLH1}|$ or $|t_{PHL2} - t_{PHL1}|$

OUPUT SKEW (DIFFERENT BANKS) — $t_{SK(O2)}$

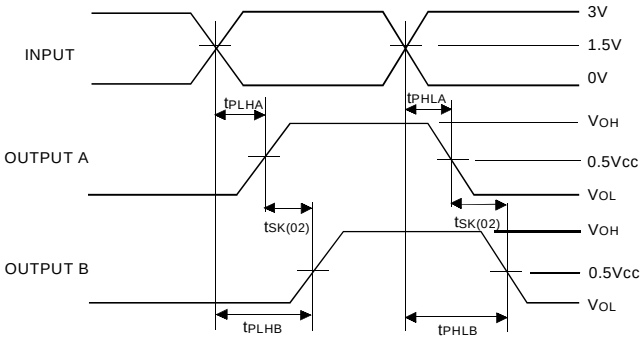

$t_{SK(02)} = |t_{PLHB} - t_{PLHA}|$ or $|t_{PHLB} - t_{PHLA}|$

ENABLE AND DISABLE TIMES

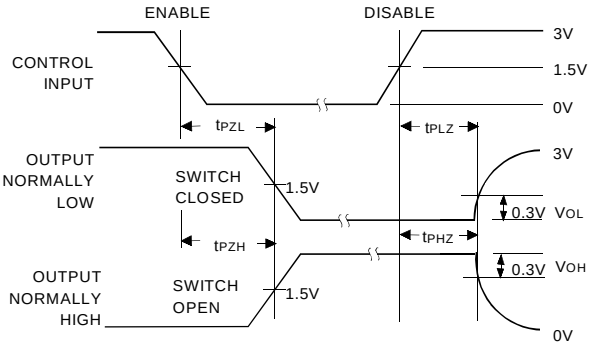

PART-TO-PART SKEW — $t_{SK(T)}$

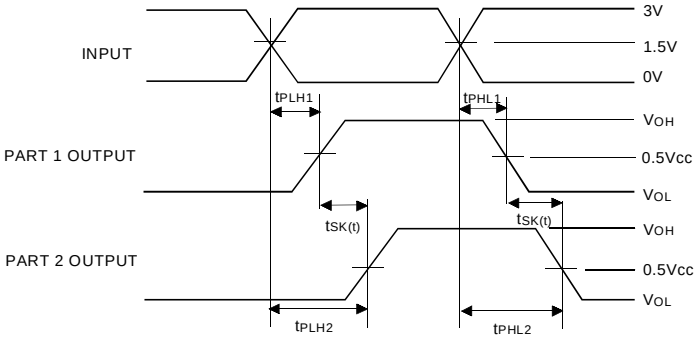

$t_{SK(t)} = |t_{PLH2} - t_{PLH1}|$ or $|t_{PHL2} - t_{PHL1}|$

ORDERING INFORMATION

QS XXXX XX

Device Type

Package

Q	Quarter Size Small Outline Pacakge (SO20-8)
SO	Small Outline IC (SO20-2)

5806	Guaranteed Low Skew CMOS Clock Driver/Buffer
5806A	

CORPORATE HEADQUARTERS
2975 Stender Way
Santa Clara, CA 95054

for SALES:
800-345-7015 or 408-727-6116
fax: 408-492-8674
www.idt.com*

**To search for sales office near you, please click the sales button found on our home page or dial the 800# above and press 2.*

The IDT logo, QuickSwitch, and SynchroSwitch are registered trademarks of Integrated Device Technology, Inc.