SN74LS240, SN74LS244

Octal Buffer/Line Driver with 3-State Outputs

The SN74LS240 and SN74LS244 are Octal Buffers and Line Drivers designed to be employed as memory address drivers, clock drivers and bus-oriented transmitters/receivers which provide improved PC board density.

- Hysteresis at Inputs to Improve Noise Margins
- 3-State Outputs Drive Bus Lines or Buffer Memory Address Registers
- Input Clamp Diodes Limit High-Speed Termination Effects

GUARANTEED OPERATING RANGES

Symbol	Parameter	Min	Typ	Max	Unit
V_{CC}	Supply Voltage	4.75	5.0	5.25	V
T_A	Operating Ambient Temperature Range	0	25	70	°C
I_{OH}	Output Current – High			–3.0	mA
				–15	mA
I_{OL}	Output Current – Low			24	mA

ON Semiconductor

http://onsemi.com

LOW POWER SCHOTTKY

MARKING DIAGRAMS

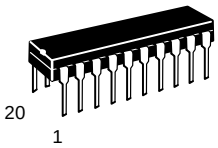

PDIP–20
N SUFFIX
CASE 738

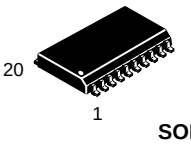

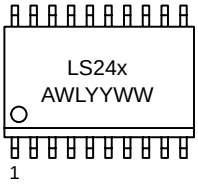

SOIC–20
DW SUFFIX
CASE 751D

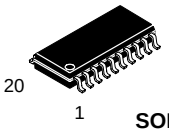

SOEIAJ–20
M SUFFIX
CASE 967

x = 0 or 4
A = Assembly Location
WL = Wafer Lot
YY = Year
WW = Work Week

ORDERING INFORMATION

See detailed ordering and shipping information in the package dimensions section on page 5 of this data sheet.

October, 2001 – Rev. 8

Publication Order Number:
SN74LS240/D

LOGIC AND CONNECTION DIAGRAMS DIP (TOP VIEW)

SN74LS240

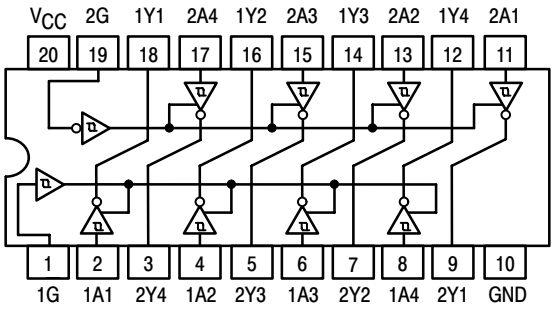

SN74LS244

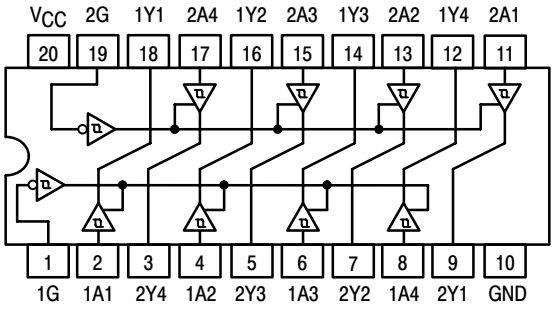

TRUTH TABLES

SN74LS240

INPUTS		OUTPUT
$\overline{1G}$, $\overline{2G}$	D	
L	L	H
L	H	L
H	X	(Z)

SN74LS244

INPUTS		OUTPUT
$\overline{1G}$, $\overline{2G}$	D	
L	L	L
L	H	H
H	X	(Z)

H = HIGH Voltage Level
L = LOW Voltage Level
X = Immaterial
Z = HIGH Impedance

DC CHARACTERISTICS OVER OPERATING TEMPERATURE RANGE (unless otherwise specified)

Symbol	Parameter		Limits Min	Limits Typ	Limits Max	Unit	Test Conditions	
V_{IH}	Input HIGH Voltage		2.0			V	Guaranteed Input HIGH Voltage for All Inputs	
V_{IL}	Input LOW Voltage				0.8	V	Guaranteed Input LOW Voltage for All Inputs	
$V_{T+}–V_{T–}$	Hysteresis		0.2	0.4		V	V_{CC} = MIN	
V_{IK}	Input Clamp Diode Voltage			–0.65	–1.5	V	V_{CC} = MIN, I_{IN} = –18 mA	
V_{OH}	Output HIGH Voltage		2.4	3.4		V	V_{CC} = MIN, I_{OH} = –3.0 mA	
			2.0			V	V_{CC} = MIN, I_{OH} = MAX	
V_{OL}	Output LOW Voltage			0.25	0.4	V	I_{OL} = 12 mA	V_{CC} = V_{CC} MIN, V_{IN} = V_{IL} or V_{IH} per Truth Table
				0.35	0.5	V	I_{OL} = 24 mA	
I_{OZH}	Output Off Current HIGH				20	μA	V_{CC} = MAX, V_{OUT} = 2.7 V	
I_{OZL}	Output Off Current LOW				–20	μA	V_{CC} = MAX, V_{OUT} = 0.4 V	
I_{IH}	Input HIGH Current				20	μA	V_{CC} = MAX, V_{IN} = 2.7 V	
					0.1	mA	V_{CC} = MAX, V_{IN} = 7.0 V	
I_{IL}	Input LOW Current				–0.2	mA	V_{CC} = MAX, V_{IN} = 0.4 V	
I_{OS}	Output Short Circuit Current (Note 1)		–40		–225	mA	V_{CC} = MAX	
I_{CC}	Power Supply Current Total, Output HIGH				27	mA	V_{CC} = MAX	
	Total, Output LOW	LS240			44			
		LS244			46			
	Total at HIGH Z	LS240			50			
		LS244			54			

1. Not more than one output should be shorted at a time, nor for more than 1 second.

AC CHARACTERISTICS (T_A = 25°C, V_{CC} = 5.0 V)

Symbol	Parameter	Limits Min	Limits Typ	Limits Max	Unit	Test Conditions
t_{PLH} t_{PHL}	Propagation Delay, Data to Output LS240		9.0 12	14 18	ns	C_L = 45 pF, R_L = 667 Ω
t_{PLH} t_{PHL}	Propagation Delay, Data to Output LS244		12 12	18 18	ns	
t_{PZH}	Output Enable Time to HIGH Level		15	23	ns	
t_{PZL}	Output Enable Time to LOW Level		20	30	ns	
t_{PLZ}	Output Disable Time from LOW Level		15	25	ns	C_L = 5.0 pF, R_L = 667 Ω
t_{PHZ}	Output Disable Time from HIGH Level		10	18	ns	

AC WAVEFORMS

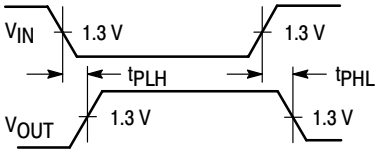

Figure 1.

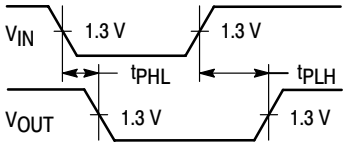

Figure 2.

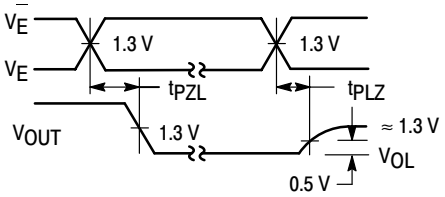

Figure 3.

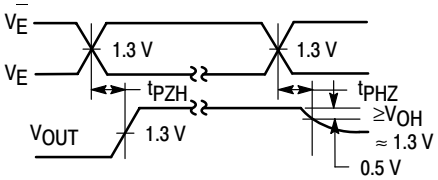

Figure 4.

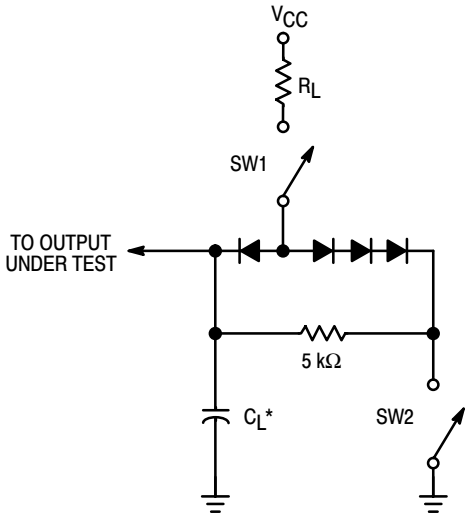

SWITCH POSITIONS

SYMBOL	SW1	SW2
t_{PZH}	Open	Closed
t_{PZL}	Closed	Open
t_{PLZ}	Closed	Closed
t_{PHZ}	Closed	Closed

Figure 5.

DEVICE ORDERING INFORMATION

Device Order Number	Package Type	Tape and Reel Size
SN74LS240N	PDIP–20	1440 Units/Box
SN74LS240DW	SOIC–WIDE	38 Units/Rail
SN74LS240DWR2	SOIC–WIDE	2500/Tape and Reel
SN74LS240M	SOEIAJ–20	See Note 2
SN74LS240MEL	SOEIAJ–20	See Note 2
SN74LS244N	PDIP–20	1440 Units/Box
SN74LS244DW	SOIC–WIDE	38 Units/Rail
SN74LS244DWR2	SOIC–WIDE	2500/Tape and Reel
SN74LS244M	SOEIAJ–20	See Note 2
SN74LS244MEL	SOEIAJ–20	See Note 2

2. For ordering information on the EIAJ version of the SOIC package, please contact your local ON Semiconductor representative.

PACKAGE DIMENSIONS

N SUFFIX
PLASTIC PACKAGE
CASE 738–03
ISSUE E

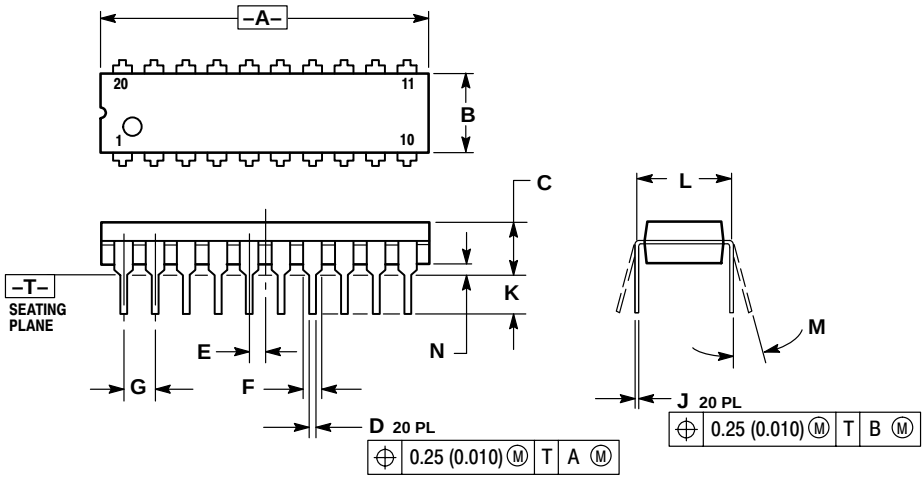

NOTES:
1. DIMENSIONING AND TOLERANCING PER ANSI Y14.5M, 1982.
2. CONTROLLING DIMENSION: INCH.
3. DIMENSION L TO CENTER OF LEAD WHEN FORMED PARALLEL.
4. DIMENSION B DOES NOT INCLUDE MOLD FLASH.

	INCHES		MILLIMETERS	
DIM	MIN	MAX	MIN	MAX
A	1.010	1.070	25.66	27.17
B	0.240	0.260	6.10	6.60
C	0.150	0.180	3.81	4.57
D	0.015	0.022	0.39	0.55
E	0.050 BSC		1.27 BSC	
F	0.050	0.070	1.27	1.77
G	0.100 BSC		2.54 BSC	
J	0.008	0.015	0.21	0.38
K	0.110	0.140	2.80	3.55
L	0.300 BSC		7.62 BSC	
M	0°	15°	0°	15°
N	0.020	0.040	0.51	1.01

D SUFFIX
PLASTIC SOIC PACKAGE
CASE 751D–05
ISSUE F

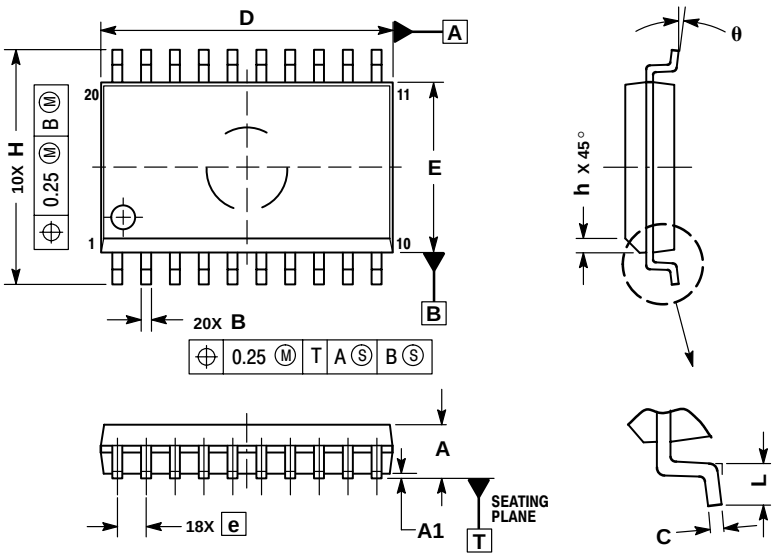

NOTES:
1. DIMENSIONS ARE IN MILLIMETERS.
2. INTERPRET DIMENSIONS AND TOLERANCES PER ASME Y14.5M, 1994.
3. DIMENSIONS D AND E DO NOT INCLUDE MOLD PROTRUSION.
4. MAXIMUM MOLD PROTRUSION 0.15 PER SIDE.
5. DIMENSION B DOES NOT INCLUDE DAMBAR PROTRUSION. ALLOWABLE PROTRUSION SHALL BE 0.13 TOTAL IN EXCESS OF B DIMENSION AT MAXIMUM MATERIAL CONDITION.

	MILLIMETERS	
DIM	MIN	MAX
A	2.35	2.65
A1	0.10	0.25
B	0.35	0.49
C	0.23	0.32
D	12.65	12.95
E	7.40	7.60
e	1.27 BSC	
H	10.05	10.55
h	0.25	0.75
L	0.50	0.90
θ	0°	7°

PACKAGE DIMENSIONS

M SUFFIX
SOEIAJ PACKAGE
CASE 967–01
ISSUE O

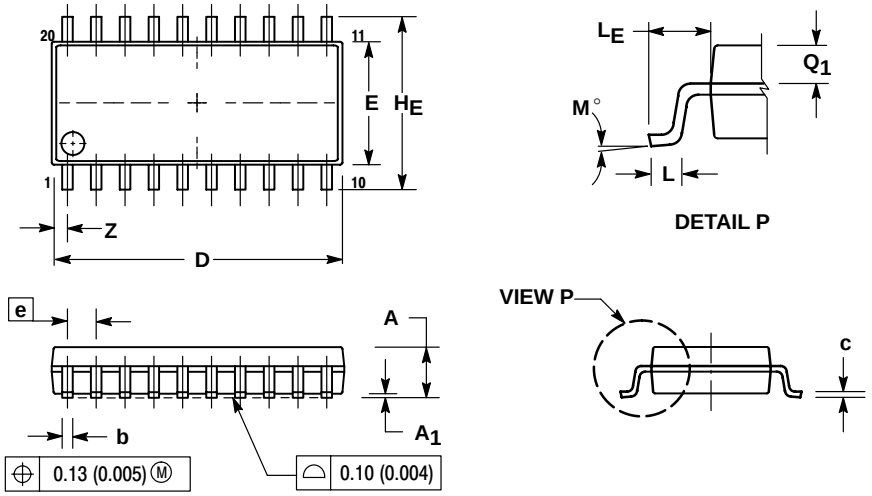

NOTES:
1. DIMENSIONING AND TOLERANCING PER ANSI Y14.5M, 1982.
2. CONTROLLING DIMENSION: MILLIMETER.
3. DIMENSIONS D AND E DO NOT INCLUDE MOLD FLASH OR PROTRUSIONS AND ARE MEASURED AT THE PARTING LINE. MOLD FLASH OR PROTRUSIONS SHALL NOT EXCEED 0.15 (0.006) PER SIDE.
4. TERMINAL NUMBERS ARE SHOWN FOR REFERENCE ONLY.
5. THE LEAD WIDTH DIMENSION (b) DOES NOT INCLUDE DAMBAR PROTRUSION. ALLOWABLE DAMBAR PROTRUSION SHALL BE 0.08 (0.003) TOTAL IN EXCESS OF THE LEAD WIDTH DIMENSION AT MAXIMUM MATERIAL CONDITION. DAMBAR CANNOT BE LOCATED ON THE LOWER RADIUS OR THE FOOT. MINIMUM SPACE BETWEEN PROTRUSIONS AND ADJACENT LEAD TO BE 0.46 (0.018).

	MILLIMETERS		INCHES	
DIM	MIN	MAX	MIN	MAX
A	–––	2.05	–––	0.081
A_1	0.05	0.20	0.002	0.008
b	0.35	0.50	0.014	0.020
c	0.18	0.27	0.007	0.011
D	12.35	12.80	0.486	0.504
E	5.10	5.45	0.201	0.215
e	1.27 BSC		0.050 BSC	
H_E	7.40	8.20	0.291	0.323
L	0.50	0.85	0.020	0.033
L_E	1.10	1.50	0.043	0.059
M	0 °	10 °	0 °	10 °
Q_1	0.70	0.90	0.028	0.035
Z	–––	0.81	–––	0.032

PUBLICATION ORDERING INFORMATION

Literature Fulfillment:
Literature Distribution Center for ON Semiconductor
P.O. Box 5163, Denver, Colorado 80217 USA
Phone: 303–675–2175 or 800–344–3860 Toll Free USA/Canada
Fax: 303–675–2176 or 800–344–3867 Toll Free USA/Canada
Email: ONlit@hibbertco.com

N. American Technical Support: 800–282–9855 Toll Free USA/Canada

JAPAN: ON Semiconductor, Japan Customer Focus Center
4–32–1 Nishi–Gotanda, Shinagawa–ku, Tokyo, Japan 141–0031
Phone: 81–3–5740–2700
Email: r14525@onsemi.com

ON Semiconductor Website: http://onsemi.com

For additional information, please contact your local Sales Representative.