TOSHIBA Bipolar Linear Integrated Circuit Silicon Monolithic

TA6009FM

Shock Sensor IC (1 ch version)

TA6009FM detects an existence of external shock through the shock sensor and output.

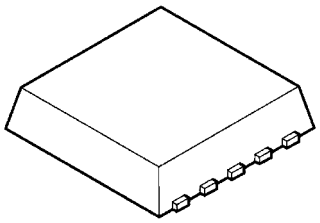

Weight: 0.016 g (typ.)

Features

- TA6009FM operates from 2.7 to 5.5 V DC single power supply voltage.
- Signal from the shock sensor is amplified according to setting gain, and is detected through the internal window comparator.
- TA6009FM incorporates 1-ch shock detecting circuitry.
- Input terminal of sensor signal is designed high impedance.
  Differential input impedance = 100 MΩ (typ.)
- LPF (Low Pass Filter) circuitry is incorporated.
  Cut-off frequency of LPF = 7 kHz
- Sensitivity of shock detection can be adjusted by external devices.
- Small package
  SON10-P-0303-0.50 (0.5 mm pitch)

Block Diagram

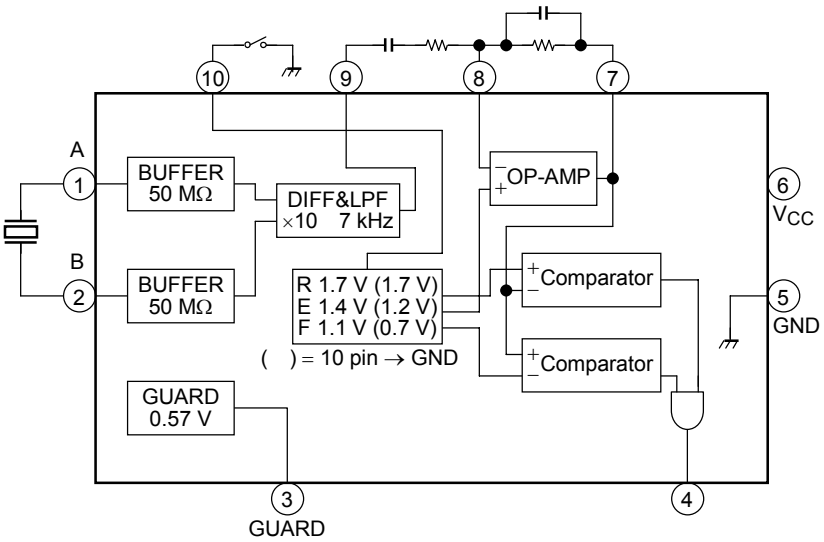

Pin Connection (top view)

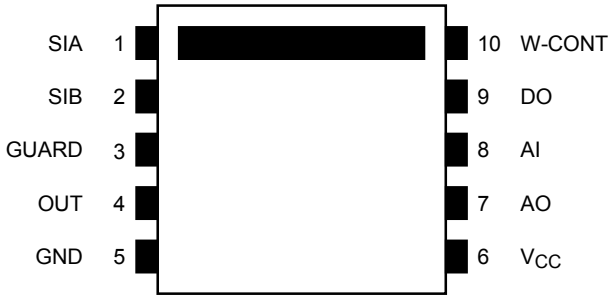

Pin Function

Pin No.	Pin Name	Function
1	SIA	Connection terminal of shock sensor
2	SIB	Connection terminal of shock sensor
3	GUARD	Input (1, 2 pin) GUARD terminal
4	OUT	Output terminal (output = “L” when shock is detected.)
5	GND	Ground terminal
6	V_{CC}	Power supply voltage
7	AO	Op-Amp output terminal
8	AI	Op-Amp input terminal
9	DO	Differential-Amp output terminal
10	W-CONT	WindComp. trip voltage selection terminal

Maximum Ratings (Ta = 25°C)

Characteristics	Symbol	Rating	Unit
Power supply voltage	V_{CC}	7	V
Power dissipation	P_D	150	mW
Storage temperature	T_{stg}	−55 to 150	°C

Recommend Operating Condition

Characteristics	Symbol	Rating	Unit
Power supply voltage	V_{CC}	2.7 to 5.5	V
Operating temperature	T_{opr}	−25 to 85	°C

Note: The IC may be destroyed due to short circuit between adjacent pins, incorrect orientation of device’s mounting, connecting positive and negative power supply pins wrong way round, air contamination fault, or fault by improper grounding.

Electrical Characteristics (unless otherwise specified, V_{CC} = 3.3 V, Ta = 25°C)

Characteristics	Symbol	Test Circuit	Test Condition	Min	Typ.	Max	Unit
Supply voltage	V_{CC}	—	—	2.7	3.3	5.5	V
Supply current	I_{CC}	(1)	V_{CC} = 3.3 V		1.8	2.4	mA
			V_{CC} = 5.0 V		1.8	2.4	

(GUARD)

Characteristics	Symbol	Test Circuit	Test Condition	Min	Typ.	Max	Unit
Output voltage	VoGur	(2)	—	0.52	0.57	0.62	V

(DIFF-AMP)

Characteristics	Symbol	Test Circuit	Test Condition	Min	Typ.	Max	Unit
Input impedance (Note 1)	Zin	—	—	50	100		MΩ
Gain	GvBuf	(3)	—	19.6	20	20.4	dB
Output DC voltage	VoBuf	(4)	Connect C = 100 pF between 1 pin and 2 pin	0.7	1	1.3	V
Low pass filter cut-off freq.	fc	(5)	Frequency at −3dB point	5	7	10	kHz
Output source current	IBso	(6)	Voh = V_{CC} − 1 V	400	800		μA
Output sink current	IBsi	(7)	Vol = 0.3 V	75	130		μA

Note 1: Marked parameters are reference data.

(OP-AMP)

Characteristics	Symbol	Test Circuit	Test Condition	Min	Typ.	Max	Unit
Cut-off frequency (Note 1)	fT	—	—	1.5	2		MHz
Openloop gain (Note 1)	Gvo	—	—	80	90		dB
Input voltage 1	Vin1	(8)	10 pin → OPEN (Note 2)	1.33	1.4	1.47	V
Input voltage 2	Vin2	(9)	10 pin → GND (Note 2)	1.14	1.2	1.26	V
Input current	I_{in}	(10)	—		25	50	nA
Offset voltage (Note 1)	Voff	—	—	−5	0	5	mV
Output source current	IAso	(11)	Voh = V_{CC} − 1 V	300	800		μA
Output sink current	IAsi	(12)	Vol = 0.3 V	130	200		μA

Note 1: Marked parameters are reference data.

Note 2: 10 pin must be non-connected otherwise connected to GND.

(Window-comparator)

Characteristics	Symbol	Test Circuit	Test Condition	Min	Typ.	Max	Unit
Trip voltage 1 (Note 1)	Vtrp1	—	10 pin → OPEN (Note 2)	Vin1 ±0.285	Vin1 ±0.3	Vin1 ±0.315	V
Trip voltage 2 (Note 1)	Vtrp2	—	10 pin → GND (Note 2)	Vin2 ±0.475	Vin2 ±0.5	Vin2 ±0.525	V
Output source current	IWso	(13)	Voh = V_{CC} − 0.5 V	30	50		μA
Output sink current	IWsi	(14)	Vol = 0.3 V	300	800		μA

Note 1: Marked parameters are reference data.

Note 2: 10 pin must be non-connected otherwise connected to GND.

Application Note

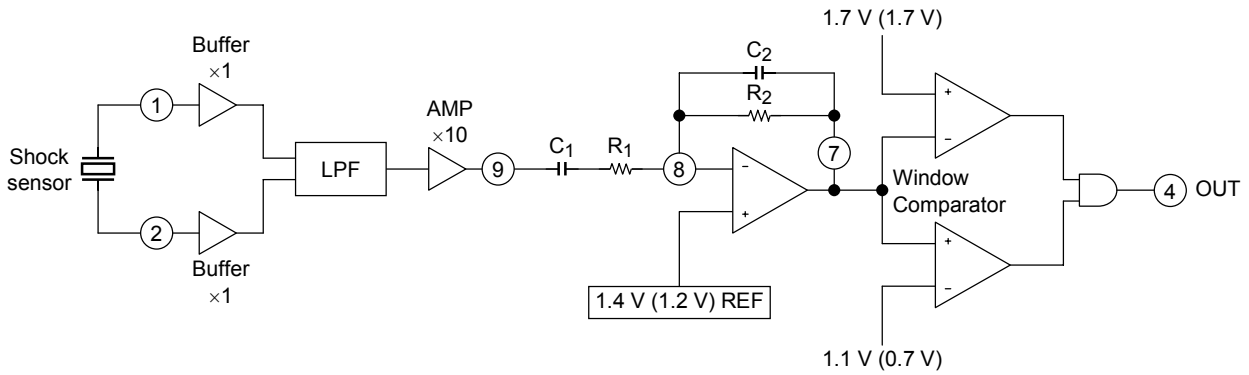

Figure 1 The configuration of G-force sensor amplifier

Figure 1 is the composition of G-Force sense amplifier.

The shock sensor is connected between 1 and 2 terminal.

When G-force Sensor (sensor sensibility = s (mV/G)) is used to detect external shock of g (G), the external parts are determined as following.

(Gain setting) * 10 PIN → GND

$500/(s \times g) = G1$

$G1/10 = G$ (OP-AMP)

(HPF setting)

$fc = 1/(2\pi \times R_1 \times C_1)$

(LPF setting)

$fc = 1/(2\pi \times R_2 \times C_2)$

Reference Data

(1) 9 pin (DIFF-AMP output) CMRR, PSRR

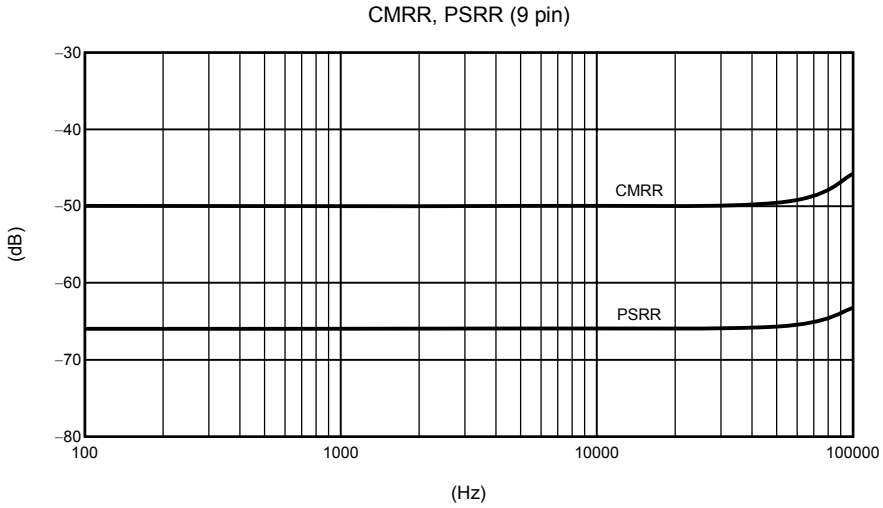

(2) 7 pin (OP-AMP output) source current

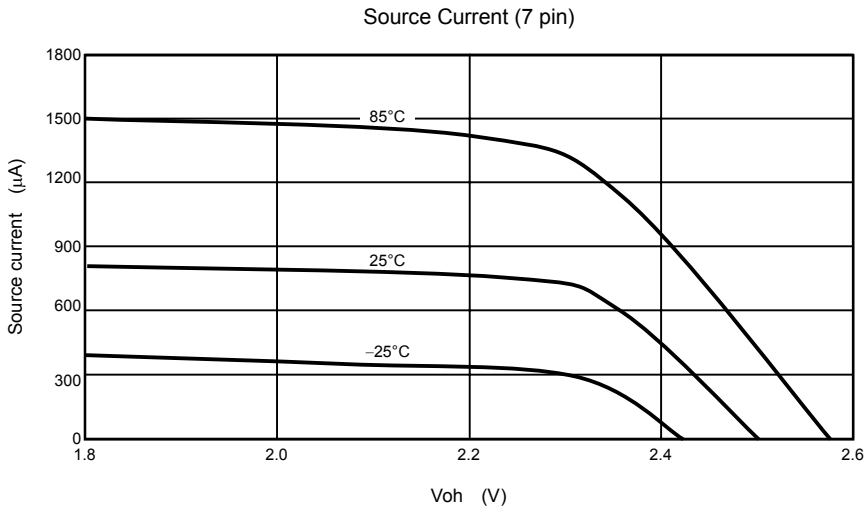

(3) 7 pin (OP-AMP output) sink current

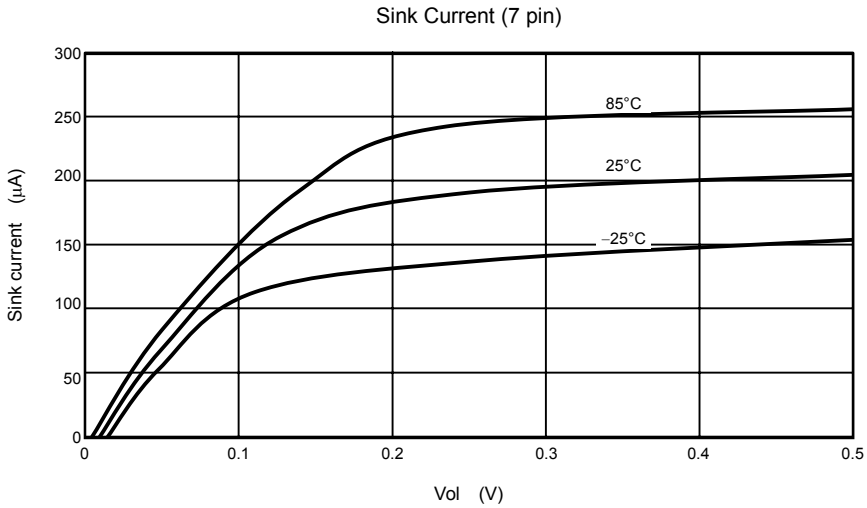

Equivalent Circuit

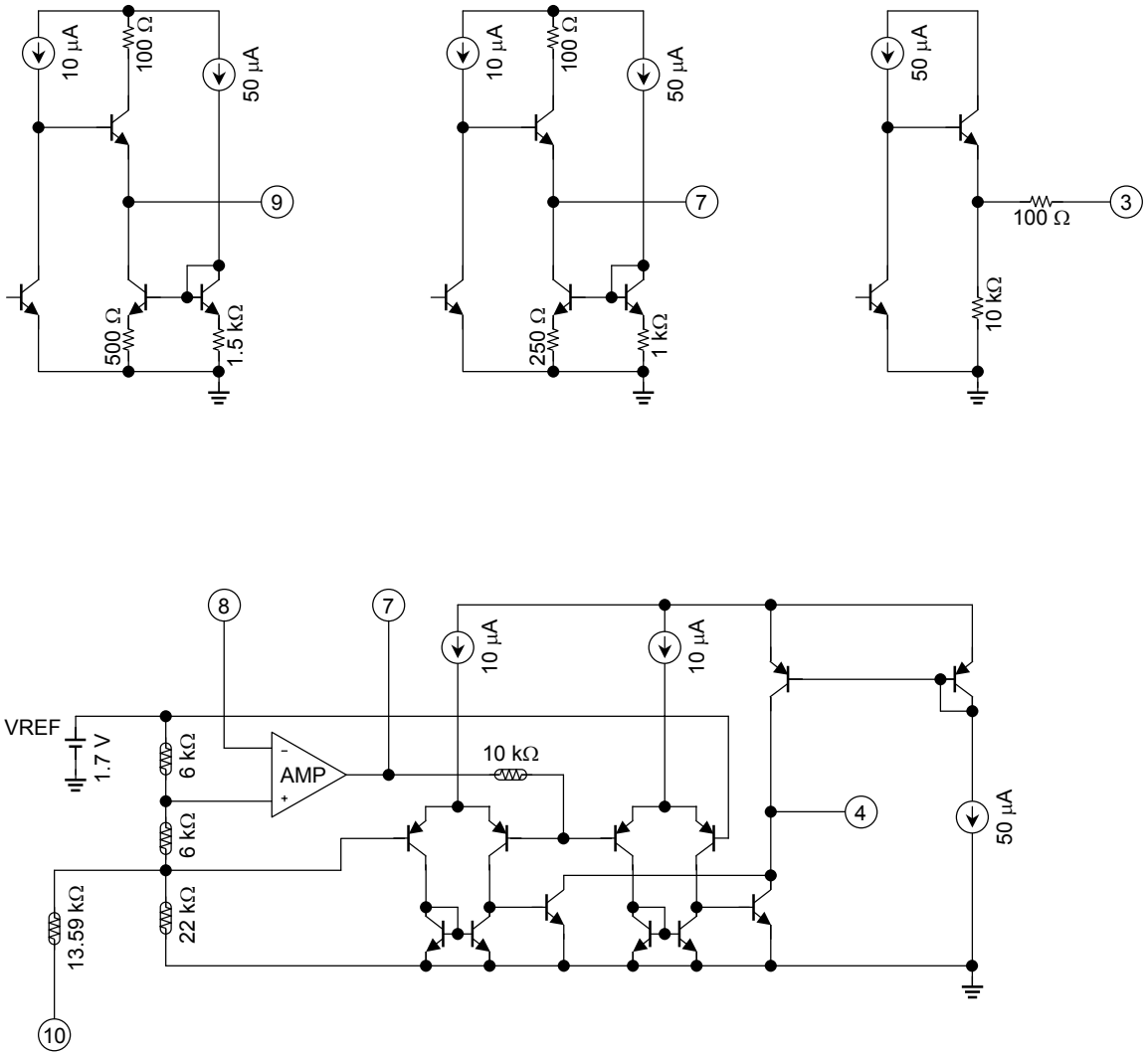

Test Circuit

(1) Supply current **ICC**

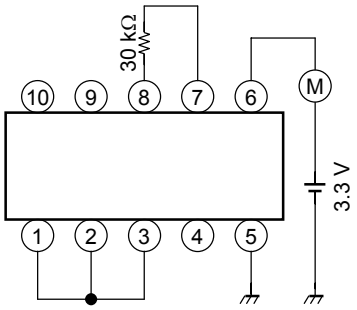

(2) GUARD
Output voltage **VoGur**

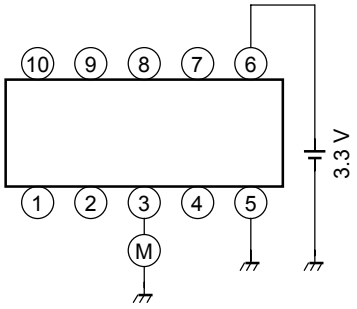

(3) DIFF-AMP
Gain **GvBuf**
Step 1

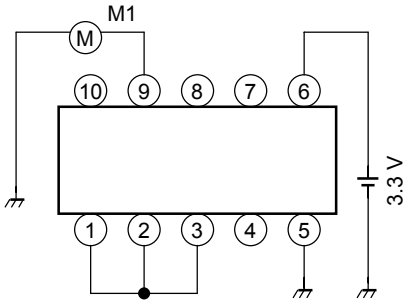

Step 2

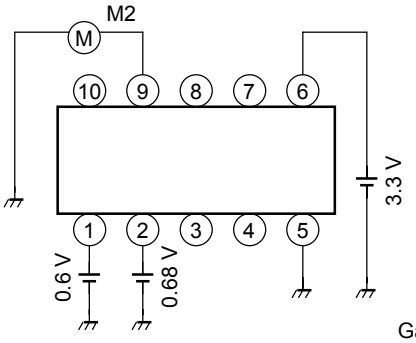

$$\text{Gain} = \frac{M2 - M1}{0.68 - 0.60}$$

(4) DIFF-AMP
Output DC voltage **VoBuf**

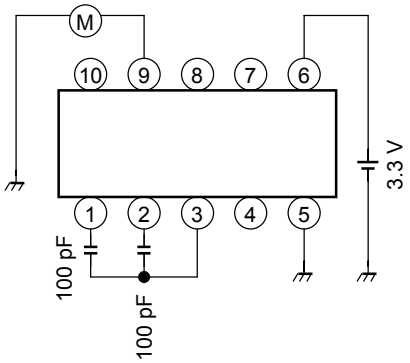

(5) DIFF-AMP
Low pass filter cut-off freq. **fc**

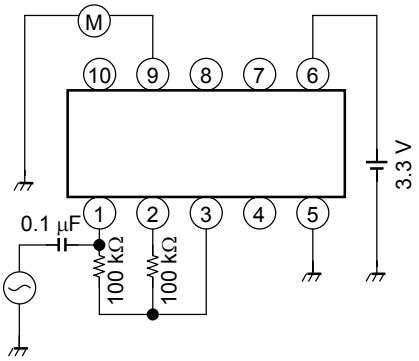

(6) DIFF-AMP
Output source current **IBso**

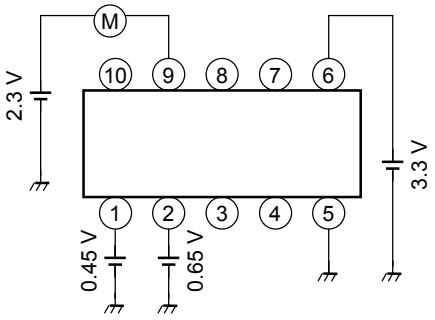

(7) DIFF-AMP
Output sink current **IBsi**

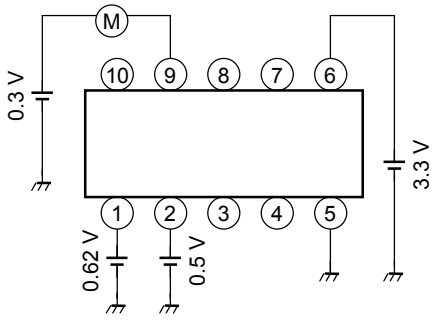

(8) OP-AMP
Input voltage 1 **Vin1**

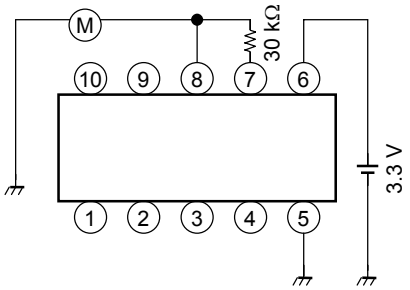

(9) OP-AMP
Input voltage 2 **Vin2**

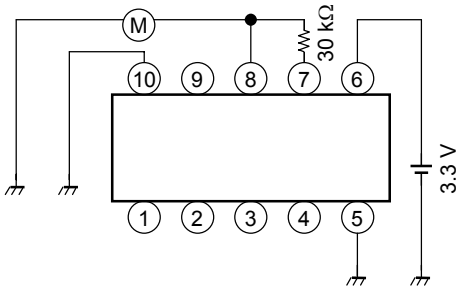

(10) OP-AMP
Input current **I_{in}**

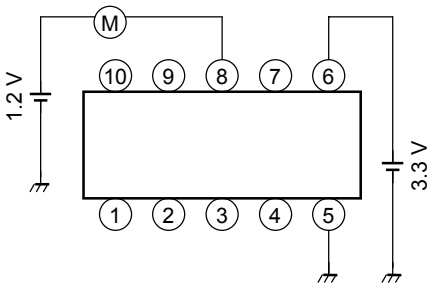

(11) OP-AMP
Output source current **IAso**

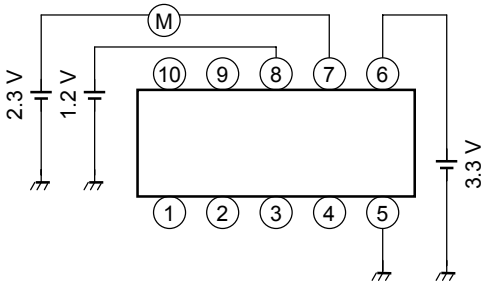

(12) OP-AMP
Output sink current **IAsi**

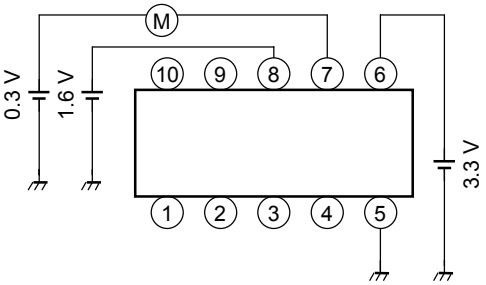

(13) Window comparator
Output source current **IWso**

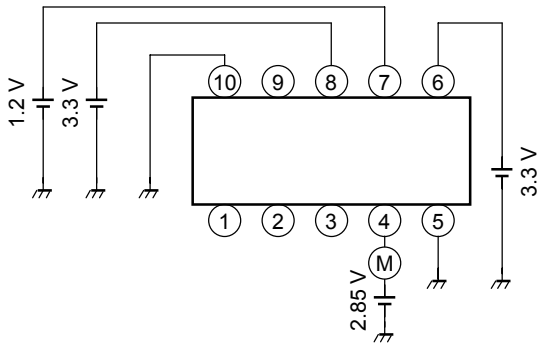

(14) Window comparator
Output sink current **IWsi**

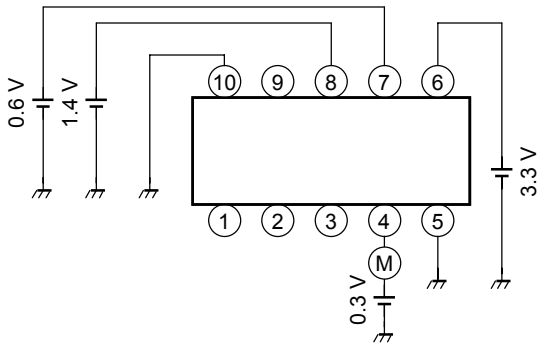

Test Circuit (for reference)

(a) DIFF-AMP
CMRR

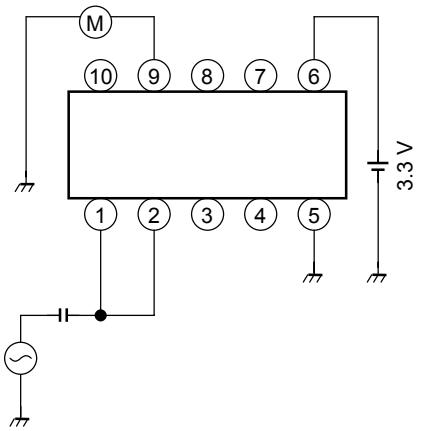

(b) DIFF-AMP
PSRR

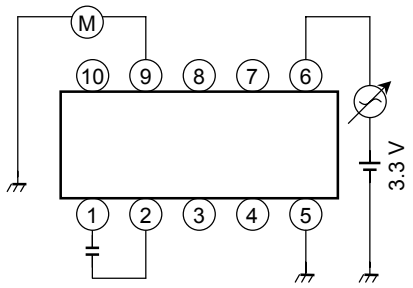

Marking

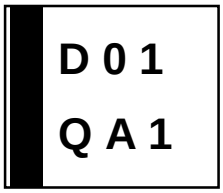

Week 1-26

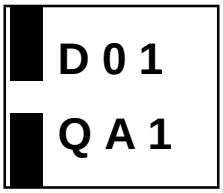

Week 27-53

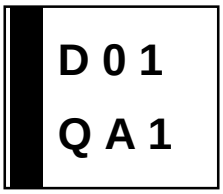

D01: Product number
Q: Monthly and Weekly code
A1: Lot code

Mold material: Epoxy resin
Lead material and disposition: An alloy of copper, soldering
Production country: JAPAN
Production factory: Front end process TOSHIBA Kitakyushu factory
Back end process TOSHIBA Kitakyushu factory

Package Dimensions

SON10-P-0303-0.50 Unit: mm

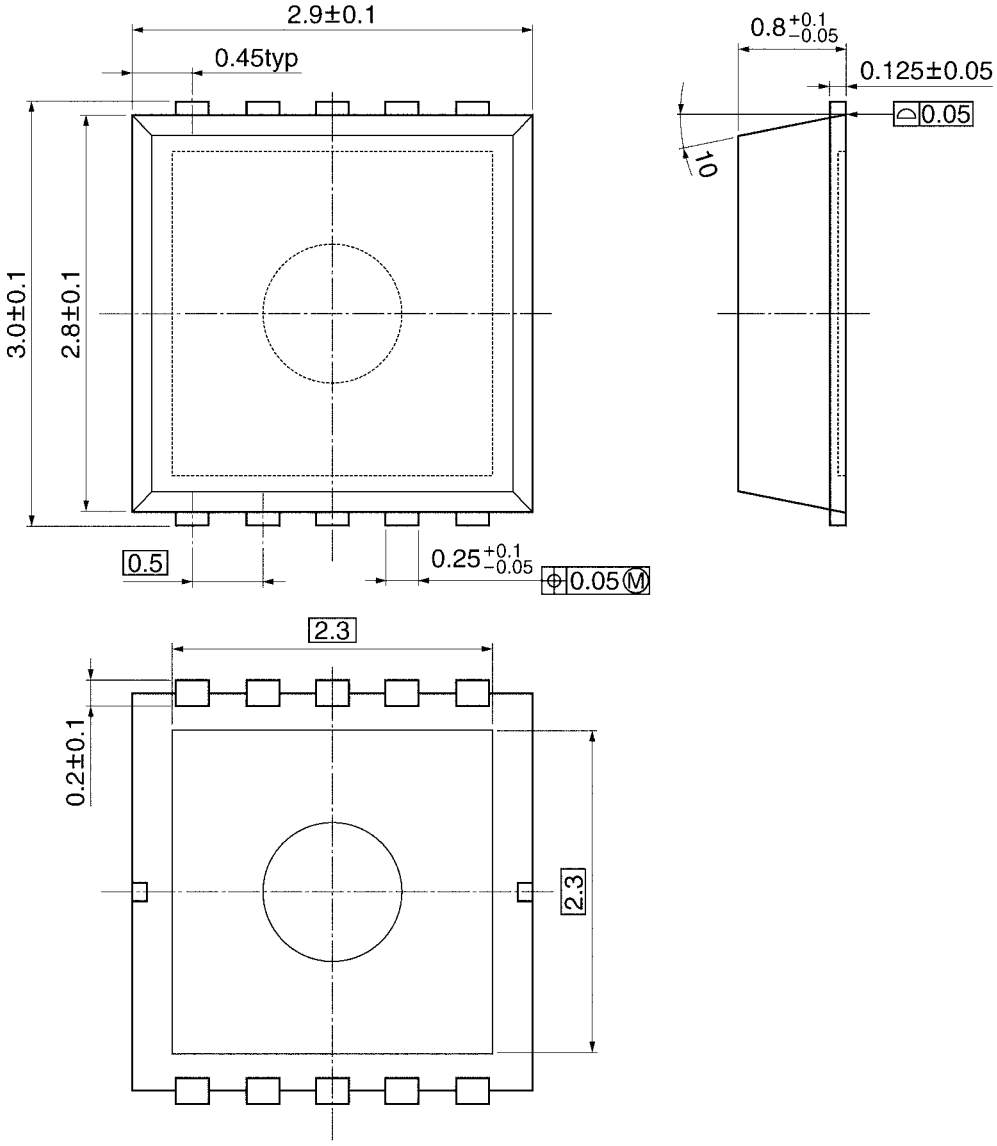

Weight: 0.016 g (typ.)

RESTRICTIONS ON PRODUCT USE

000707EBA

- TOSHIBA is continually working to improve the quality and reliability of its products. Nevertheless, semiconductor devices in general can malfunction or fail due to their inherent electrical sensitivity and vulnerability to physical stress. It is the responsibility of the buyer, when utilizing TOSHIBA products, to comply with the standards of safety in making a safe design for the entire system, and to avoid situations in which a malfunction or failure of such TOSHIBA products could cause loss of human life, bodily injury or damage to property.
  In developing your designs, please ensure that TOSHIBA products are used within specified operating ranges as set forth in the most recent TOSHIBA products specifications. Also, please keep in mind the precautions and conditions set forth in the “Handling Guide for Semiconductor Devices,” or “TOSHIBA Semiconductor Reliability Handbook” etc..
- The TOSHIBA products listed in this document are intended for usage in general electronics applications (computer, personal equipment, office equipment, measuring equipment, industrial robotics, domestic appliances, etc.). These TOSHIBA products are neither intended nor warranted for usage in equipment that requires extraordinarily high quality and/or reliability or a malfunction or failure of which may cause loss of human life or bodily injury (“Unintended Usage”). Unintended Usage include atomic energy control instruments, airplane or spaceship instruments, transportation instruments, traffic signal instruments, combustion control instruments, medical instruments, all types of safety devices, etc.. Unintended Usage of TOSHIBA products listed in this document shall be made at the customer’s own risk.
- The products described in this document are subject to the foreign exchange and foreign trade laws.
- The information contained herein is presented only as a guide for the applications of our products. No responsibility is assumed by TOSHIBA CORPORATION for any infringements of intellectual property or other rights of the third parties which may result from its use. No license is granted by implication or otherwise under any intellectual property or other rights of TOSHIBA CORPORATION or others.
- The information contained herein is subject to change without notice.