TOSHIBA Bipolar Digital Integrated Circuit
Silicon Monolithic

TD62S351AFM

1-Channel Darlington Source-Current Driver

The TD62S351AFM is a 1-channel inverting source-current driver with PNP transistor at the first stage and a NPN Darlington transistor at the second stage.
The driver incorporates an input resistor which limits output pull-down resistance and base current. Because the driver operates by source input current, it is optimal for interfacing with sink-current driven general-purpose CMOS logic ICs and microprocessors. Also, the driver is optimal for driving fluorescent display tubes and LEDs. When using the driver, pay attention to the thermal conditions.

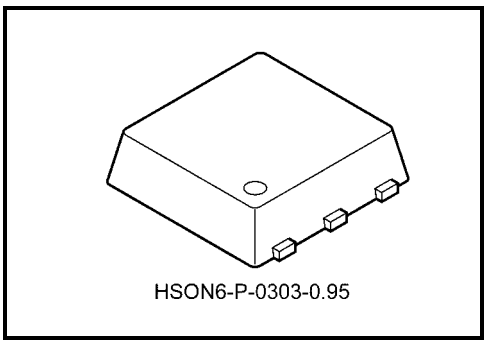

Weight: 0.017 g (typ.)

Features

- Ultra-small HSON6 package with heat sink on rear
- Large output voltage: V_{OUT} = −50 V (min)
- Large output current: I_{OUT} = −500 mA (max)
- Built-in input resistor: R_{IN} = 14 kΩ
- Input signal: Low Level Active

Pin Connection (top view)

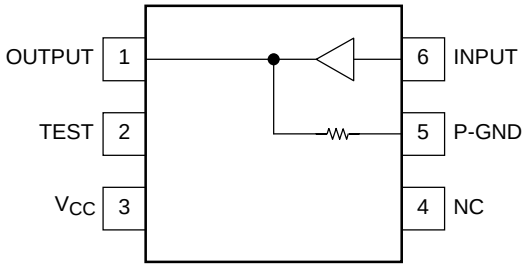

Basic Circuit Diagram

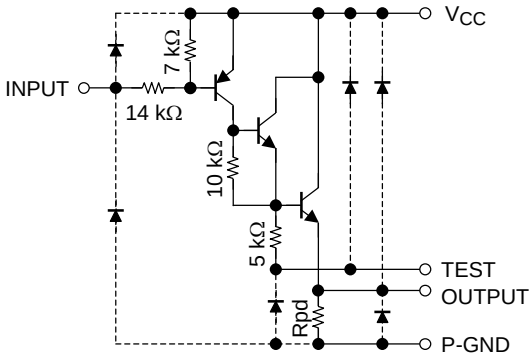

Note 1: Diodes shown using dotted lines are parasitic. Do not use them.

Note 2: When using the driver, connect the OUTPUT pin to the TEST pin.

Note 3: When using the driver, connect the P-GND pin to the heat sink on the rear of the package.

Maximum Ratings (Ta = 25°C, V_{CC} = 0 V)

Characteristics	Symbol	Rating	Unit
Supply voltage	V_{CC}-V_{GND}	50	V
Output voltage	V_{OUT}	−50	V
Collector-emitter voltage	V_{CEO}	50	V
Output current	I_{OUT}	−500	mA
Input voltage	V_{IN}	−30~0.5	V
Power dissipation	P_D (Note 4)	0.78	W
Saturated thermal resistance	$R_{th\ (j\text{-}a)}$ (Note 4)	160	°C/W
	$R_{th\ (j\text{-}c)}$ (Note 5)	25	
Operating temperature	T_{opr}	−40~85	°C
Storage temperature	T_{stg}	−55~150	°C

Note 4: 114.3 × 76.2 × 1.6 mm glass epoxy film substrate Cu heat dissipation pattern 100 mm^2

Note 5: When an infinite heat sink is mounted.

Recommended Operating Condition (Ta = –40~85°C, V_{CC} = 0 V)

Characteristics	Symbol	Test Condition	Min	Typ.	Max	Unit
Supply voltage	V_{CC}	—	0	—	50	V
Output voltage	V_{OUT}	—	0	—	−50	V
Output current	I_{OUT}	Ta = 60°C, T_j = 105°C	—	—	−130	mA
Input voltage	V_{IN}	—	−30	—	0	V

Electrical Characteristics (Ta = 25°C, V_{CC} = 0 V)

Characteristics	Symbol	Test Circuit	Test Condition	Min	Typ.	Max	Unit
Output leakage current	I_{CEX}	1	OUT = PGND = −50 V	—	—	−10	μA
Output saturation voltage	$V_{CE\ (sat)}$	2	PGND = −50 V, V_{IN} = −2.8 V, I_{OUT} = −350 mA	—	−1.8	−2.0	V
			PGND = −50 V, V_{IN} = −2.8 V, I_{OUT} = −130 mA	—	−1.5	−1.75	
DC current amplification ratio	h_{FE}	2	V_{CE} = 3 V, I_{OUT} = −350 mA	1000	—	—	
Input voltage	$V_{IN\ (OFF)}$	4	I_{OUT} = −500 μA	−1.2	—	0	V
	$V_{IN\ (ON)}$		V_{CE} = 2 V, I_{OUT} = −350 mA	−30	—	−2.8	
Input current	$I_{IN\ (ON)}$	3	V_{CC} − GND = 5.5 V, V_{IN} = GND + 0.4 V	—	—	−0.45	mA
Power dissipation	$I_{CC\ (ON)}$	3	OUT = OPEN, V_{IN} = V_{CC} − 5 V, V_{CC} − GND = 50 V	—	—	−0.8	mA
Output pulldown resistor	Rpd	—	—	168	240	312	kΩ
Turn-on delay	t_{ON}	5	V_{OUT} = −50 V, R_L = 125 Ω, C_L = 15 pF	—	0.1	—	μs
Turn-off delay	t_{OFF}			—	7.0	—	

Test Circuit

1. I_{CEX}

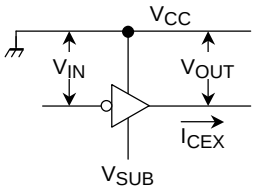

2. $V_{CE\ (sat)}$, h_{FE}

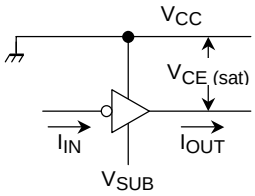

$$h_{FE} = \frac{I_{OUT}}{I_{IN}}$$

3. $I_{IN\ (ON)}$, I_{CC}

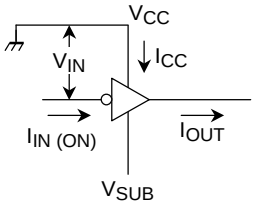

4. $V_{IN\ (ON)}$, $V_{IN\ (OFF)}$

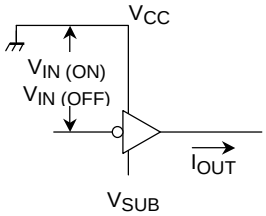

5. t_{ON}, t_{OFF}

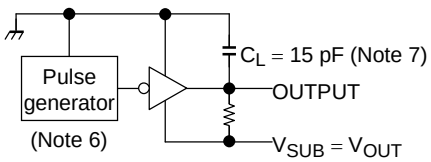

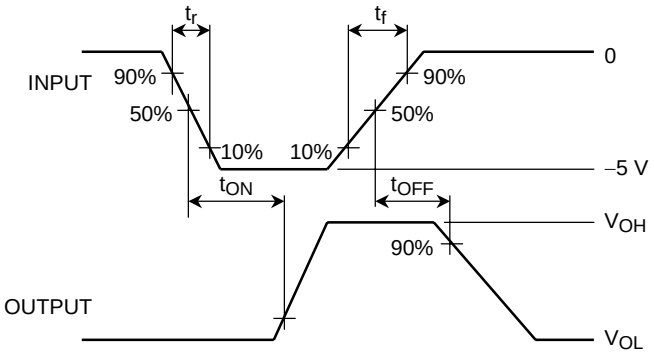

Note 6: Pulse width 50 μs, Duty cycle 10%
Output impedance 50 Ω, $t_r \leqq 5$ ns, $t_f \leqq 10$ ns

Note 7: C_L includes probe and jig capacitance.

Caution on Application

1. The device does not include protectors such as an overcurrent protector and an overvoltage protector. Applying excessive current or voltage may damage the device.
   Thus, design with great care to prevent excessive current or voltage from being applied to the device. The device may also be damaged by short-circuits between outputs and power supply/ground.
   Take care when designing output, V_{CC} and GND line.
2. If the TD62S351AFM is used to drive an inductive load (such as a motor, solenoid, or relay), Toshiba recommends that the diodes be connected between pin 1 and pin 5 so as to absorb the counter electromotive force generated by the load.
   Please adhere to the maximum ratings of this device.
3. Be sure to mount the device in the correct orientation. Make sure that the positive and negative power supply pins are connected the right way round. Otherwise, the absolute maximum current and power dissipation ratings may be exceeded and the device may break down or undergo performance degradation, causing it to catch fire or explode, and resulting in injury.

Package Dimensions

Weight: 0.017 g (typ.)

Preliminary land pattern

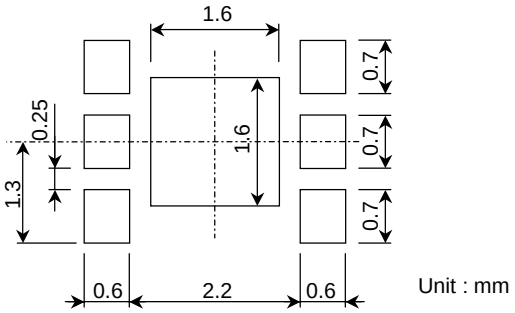

Preliminary PCB trace dimension

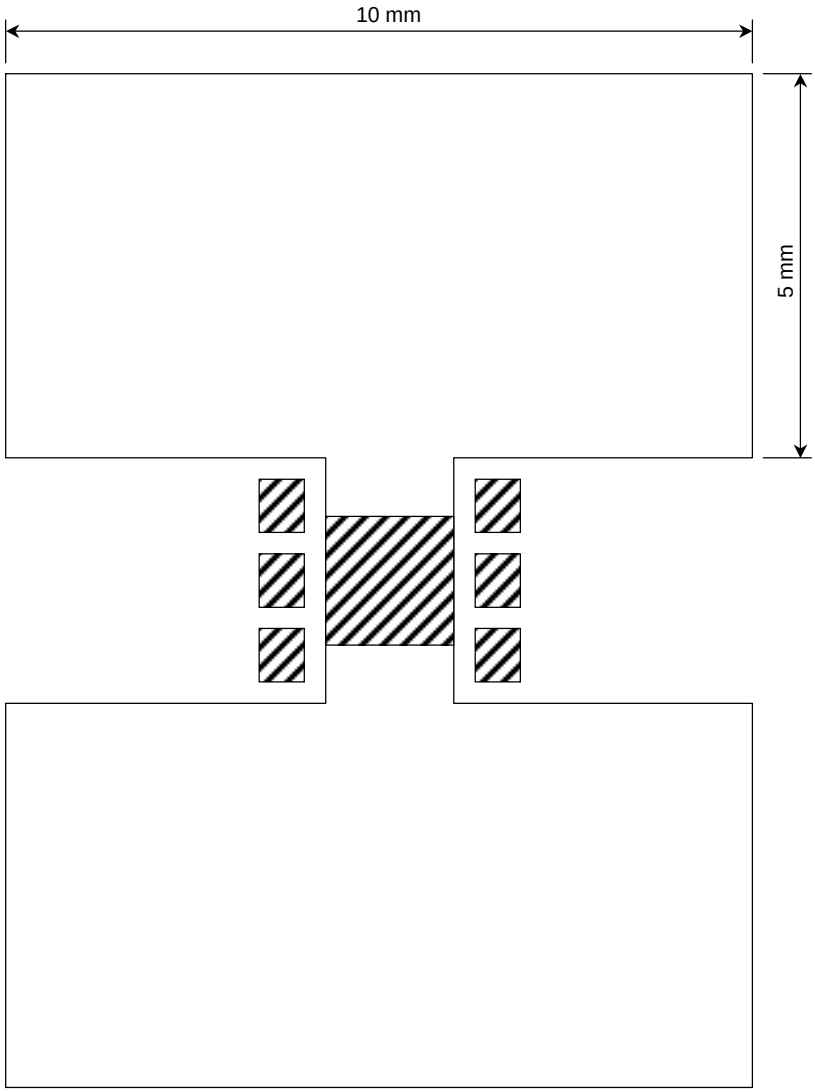

RESTRICTIONS ON PRODUCT USE

000707EBA

- TOSHIBA is continually working to improve the quality and reliability of its products. Nevertheless, semiconductor devices in general can malfunction or fail due to their inherent electrical sensitivity and vulnerability to physical stress. It is the responsibility of the buyer, when utilizing TOSHIBA products, to comply with the standards of safety in making a safe design for the entire system, and to avoid situations in which a malfunction or failure of such TOSHIBA products could cause loss of human life, bodily injury or damage to property.
  In developing your designs, please ensure that TOSHIBA products are used within specified operating ranges as set forth in the most recent TOSHIBA products specifications. Also, please keep in mind the precautions and conditions set forth in the “Handling Guide for Semiconductor Devices,” or “TOSHIBA Semiconductor Reliability Handbook” etc..
- The TOSHIBA products listed in this document are intended for usage in general electronics applications (computer, personal equipment, office equipment, measuring equipment, industrial robotics, domestic appliances, etc.). These TOSHIBA products are neither intended nor warranted for usage in equipment that requires extraordinarily high quality and/or reliability or a malfunction or failure of which may cause loss of human life or bodily injury (“Unintended Usage”). Unintended Usage include atomic energy control instruments, airplane or spaceship instruments, transportation instruments, traffic signal instruments, combustion control instruments, medical instruments, all types of safety devices, etc.. Unintended Usage of TOSHIBA products listed in this document shall be made at the customer’s own risk.
- The products described in this document are subject to the foreign exchange and foreign trade laws.
- The information contained herein is presented only as a guide for the applications of our products. No responsibility is assumed by TOSHIBA CORPORATION for any infringements of intellectual property or other rights of the third parties which may result from its use. No license is granted by implication or otherwise under any intellectual property or other rights of TOSHIBA CORPORATION or others.
- The information contained herein is subject to change without notice.