CMOS Area Image Sensor

TCM5033T

1/4-inch 330 K-Pixel CMOS Color-Image Sensor
with Built-in ADC for VGA

The TCM5033T is a CMOS color-image sensor with a built-in ADC for VGA. It outputs a signal for each pixel in sequence every 1/30 s. (This is known as progressive scanning.)

This element is equipped with 492 vertical and 660 horizontal signal pixels, and the image size conforms to the 1/4-inch optical format.

Use of the CMOS process enables low power-consumption using a single power supply voltage. The device also provides excellent color reproduction due to the use of a primary color filter, and is perfect for use as an image input device for mobile equipment, digital cameras and other of multimedia devices.

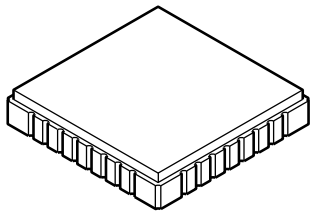

WQFN32-C-S420-1.02

Weight: 0.54 g (typ.)

Features

- Optical size: 1/4-inch optical format
- Total number of pixels: 698 (H) × 502 (V)
- Number of signal pixels: 660 (H) × 492 (V)
- Pixel pitch: 5.6 μm (H) × 5.6 μm (V) (square pixel)
- Image size: 3.696 mm (H) × 2.755 mm (V)
- Package: 32-pin CLCC
- Color filter: Primary color filter, Bayer arrangement (G checked, R/B line in sequence)
- Frame frequency: 30 Hz
- Power supply voltage: 2.8 V
- Additional functions: Variable speed electronic shutter (1/30 s~1/8000 s)
  Gain control amplifier
  Internal feedback clamp circuit
  Built-in sync. signal generator

Maximum Ratings (Ta = 25°C)

Characteristics	Symbol	Rating	Unit
Power supply voltage	V_{DD}	−0.5~4.2	V
Input voltage	V_{IN}	−0.3~V_{DD} + 0.3	V
Storage temperature	T_{stg}	−30~85	°C

000707EBA2

Recommended Operating Conditions

Characteristics	Symbol	Min	Typ.	Max	Unit
Power supply voltage	V_{AVDD}	2.6	2.8	3.0	V
	V_{DVDD}	2.6	2.8	3.0	
	V_{DVDDIO}	2.3	2.8	3.6	
Input voltage	V_{IN}	0~V_{DVDDIO}			V
Operating temperature	T_{opr}	−20~60			°C

Pin Connection (top view) and Application Circuit

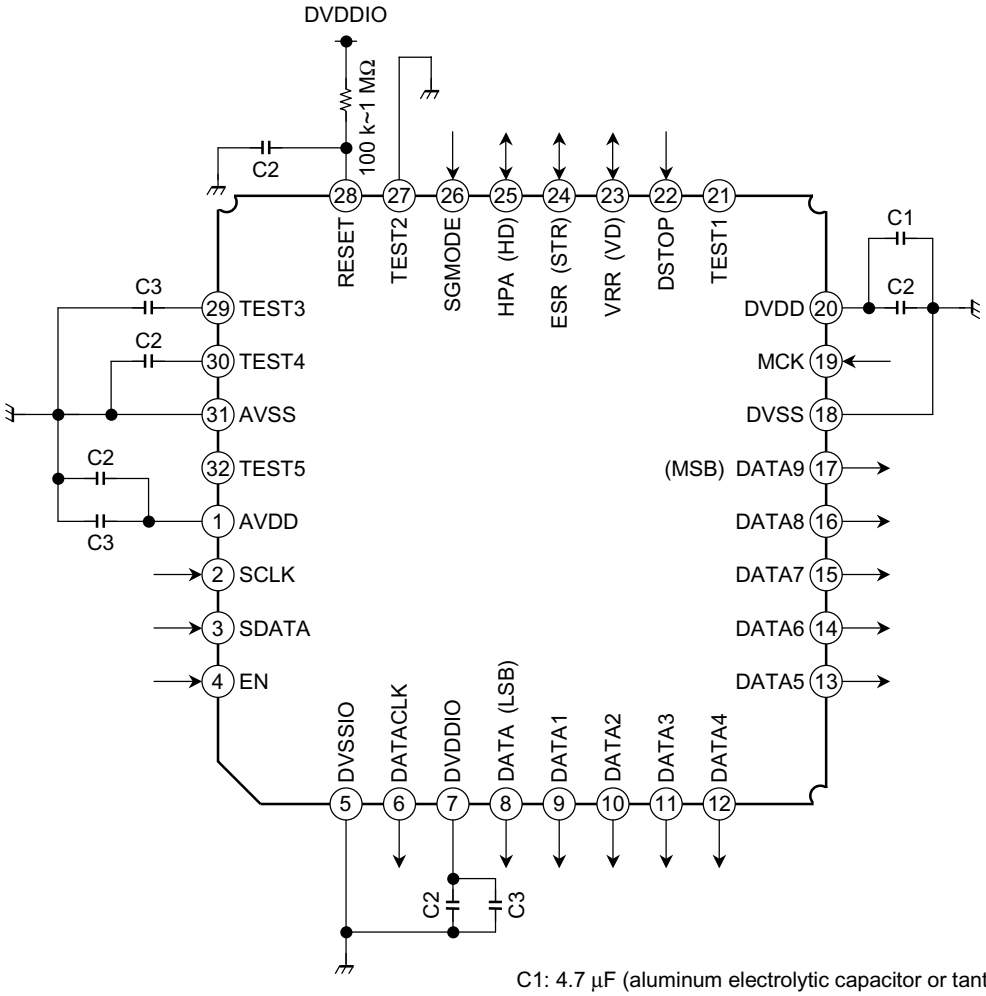

C1: 4.7 μF (aluminum electrolytic capacitor or tantalum capacitor)
C2: 0.1 μF
C3: 2.2 μF

Recommended output impedance of DVDD supply circuit: less than 0.5 Ω at 10 kHz

000707EBA2

Block Diagram

The SGMODE pin can be used to select either internal or external synchronization.

The SGMODE pin is pulled down. When the SGMODE pin is open, External Synchronization Mode is selected. When the SGMODE pin is High, Internal Synchronization Mode is selected.

In External Synchronization Mode, the HPA and VDD sync. signals and the electronic shutter signal are input from an external source. In Internal Synchronization Mode, HD and VD sync. signals are output and the value of the electronic shutter signal must be set using a command.

(i) External Synchronization Mode

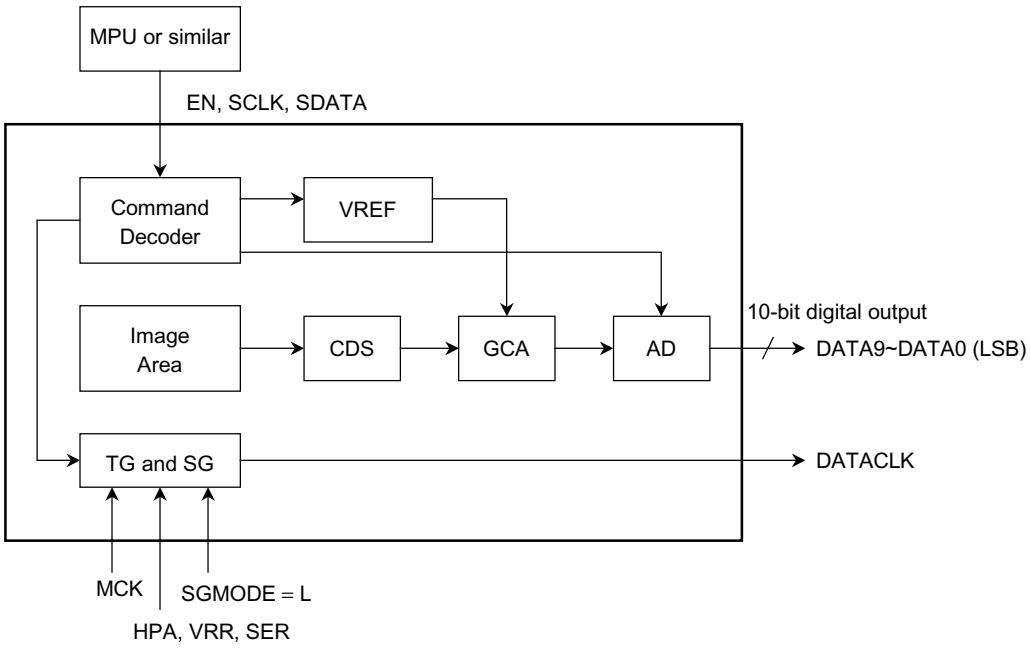

(ii) Internal Synchronization Mode

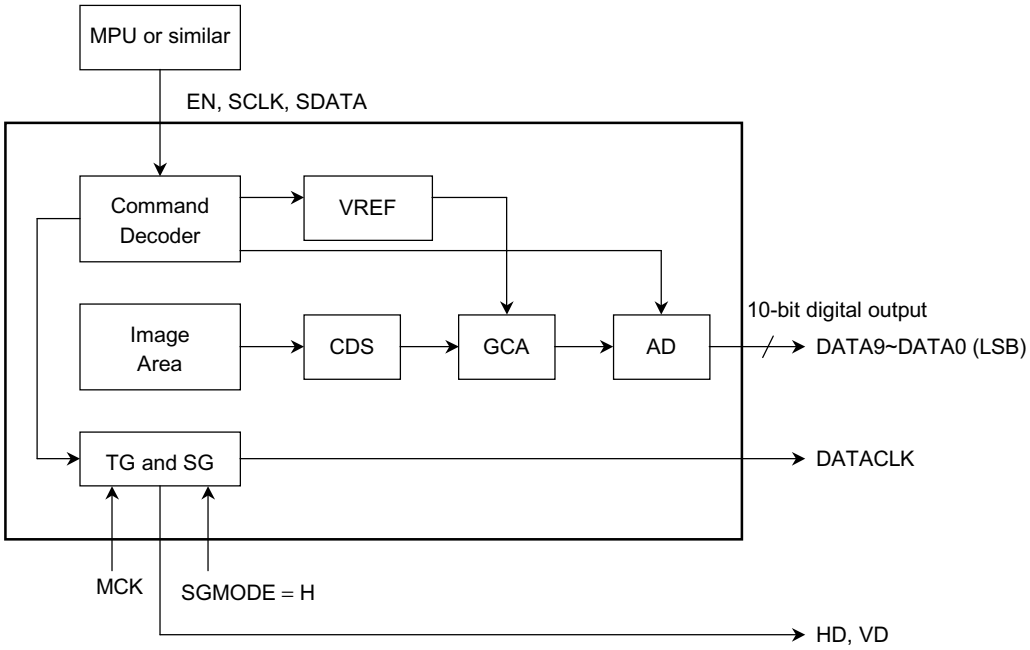

Pin Configuration

Pin No.	Symbol	I/O	Function
1	AVDD	—	Analog power supply. V_{DD} = 2.8 V ± 0.2 V
2	SCLK	I	Serial clock input for commands
3	SDATA	I	Serial data input for commands
4	EN	I	Data enable input for commands
5	DVSSIO	—	Digital I/O VSS
6	DATACLK	O	Data clock output (half of master clock)
7	DVDDIO	—	Digital I/O power supply
8	DATA0	I/O	AD output (LSB)
9	DATA1	I/O	AD output
10	DATA2	I/O	AD output
11	DATA3	I/O	AD output
12	DATA4	I/O	AD output
13	DATA5	I/O	AD output
14	DATA6	I/O	AD output
15	DATA7	I/O	AD output
16	DATA8	I/O	AD output
17	DATA9	I/O	AD output (MSB)
18	DVSS	—	Digital VSS
19	MCK	I	Master clock input
20	DVDD	—	Digital power supply. 2.8 V ± 0.2 V
21	TEST1	—	TEST terminal 1
22	DSTOP	I	Read stop control input H: Active L: Read stop
23	VRR (VD)	I/O	Vertical timing start pulse input/VD pulse output
24	ESR	I	Electrical shutter start pulse input
25	HPA (HD)	I/O	Horizontal timing start pulse input/HD pulse output
26	SGMODE	I	Internal/External sync select pin Pulled low (0 V) L: HPA, VRR, ESR input H: HD, VD output
27	TEST2	—	TEST terminal 2 Must be connected to GND
28	RESET	I	Parameter Mode reset input Pulled up L: Level H: Active reset
29	TEST3	—	TEST terminal 3 Normally this pin is connected to AVSS (2.2 μF) via a bypass capacitor.
30	TEST4	—	TEST terminal 4 Normally this pin is connected to AVSS (0.1 μF) via a bypass capacitor.
31	AVSS	—	Analog VSS
32	TEST5	—	TEST terminal 5

Optical Characteristics (Note 1)

Characteristics	Symbol	Test Conditions	Min	Typ.	Max	Unit
Sensitivity (G)	R(G)	Standard conditions (Note 2)	150 (287 LSB)	200 (383 LSB)	—	mV
Saturation voltage	V_{SAT}	Saturation exposure G output	500 (959 LSB)	—	—	mV
Blooming margin	BLM	Light intensity is 500 times standard conditions (Note 3)	No blooming			—
S/N (dark)	S/N	G output	55	57	—	dB
Decay lag	LAG	G output = 20 mV	—	—	2	mV

Note 1: Amplifier gain setting: ×1 (0dB)
Actual digital output includes black level (64 LSB).

Note 2: Standard conditions for measuring sensitivity
- 100 nt
- Other conditions are based on Note 3.

Note 3: Standard conditions (TC = 60°C centigrade) as follows
- Light source: 3200 K, halogen light box
- Optical filter: IR cut filter (cut in half at 650 nm)
- Optical lense: Fujinon f = 25 mm, F number 2.8
- Standard signal level: G output = 250 mV
- Driving conditions: frame rate = 30 fps, electronic shutter OFF

The analog output level can be estimated as follows when a ×1 gain DA converter (500 mVpp) is used.

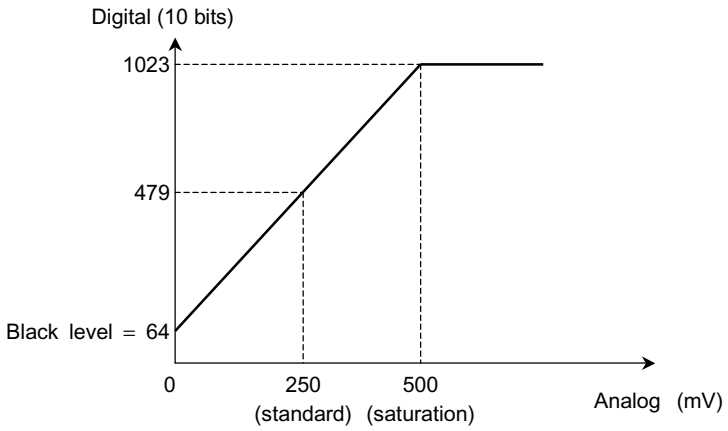

Optical lens performance influences sensor characteristics.

(1) F number: Less than F2.8 is recommended to maintain a high level of sensitivity and an acceptable S/N ratio.

(2) Exit pupil may influence shading level.

Electrical Characteristics

DC Characteristics (Ta = 25°C, V_{DD} = 2.8 V)

Characteristics	Symbol	Test Circuit	Test Condition		Min	Typ.	Max	Unit
High level input voltage	V_{IH}	—		(Note 4)	2	—	—	V
Low level input voltage	V_{IL}	—		(Note 4)	—	—	0.8	V
High level input current	I_{IH}	—	$V_{IN} = V_{DD}$	(Note 7)	150		250	μA
				(Note 4 except DSTOP)	−10		10	
Low level input current	I_{IL}	—	$V_{IN} = V_{SS}$	(Note 4 except SGMODE)	−10		10	μA
			$V_{IN} = V_{SS}$	(Note 6)	−220		−80	
High level output voltage	V_{OH}	—	$I_{OH} = -4$ mA	(Note 5)	V_{DD} −0.4	—	—	V
Low level output voltage	V_{OL}	—	$I_{OL} = 4$ mA	(Note 5)	—	—	0.4	V
Power supply current	I_{DD}	—	30fps		—	30	—	mA

Note 4: DSTOP, VRR, ESR, HPA, SGMODE, RESET, SCLK, SDATA, EN, MCK

Note 5: VD, STR, HD, DATACLK, DATA0~DATA9

Note 6: DSTOP

Note 7: SGMODE

AC Characteristics (Ta = 25°C, V_{DD} = 2.8 V)

Characteristics	Symbol	Test Circuit	Test Condition	Min	Typ.	Max	Unit
Timing margin for input pulse	t_{m1}	—	Based on MCK (Note 8)	−10	—	10	ns
	t_{m2}	—		−1/4 SCLK	—	1/4 SCLK	
	t_{m3}	—		−1/4 SCLK	—	1/4 SCLK	
Output delay time	t_{pd1}	—	Based on MCK, C = 15 pF (Note 9)	—	—	20	ns
	t_{pd2}	—		—	—	30	
	t_{pd3}	—		—	—	30	
Command clock frequency	f_{sclk}	—	(Note 10)	—	—	6	MHz

Note 8: DSTOP, VRR, ESR, HPA,

Note 9: DATACLK, DATA0~DATA9

Note 10: SCLK

Inputs/Outputs Other than Commands

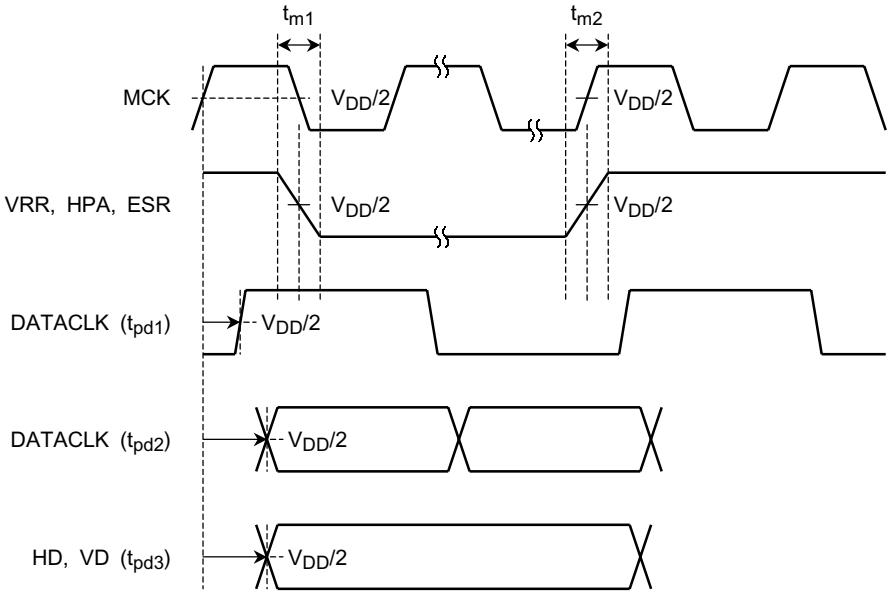

Command Inputs

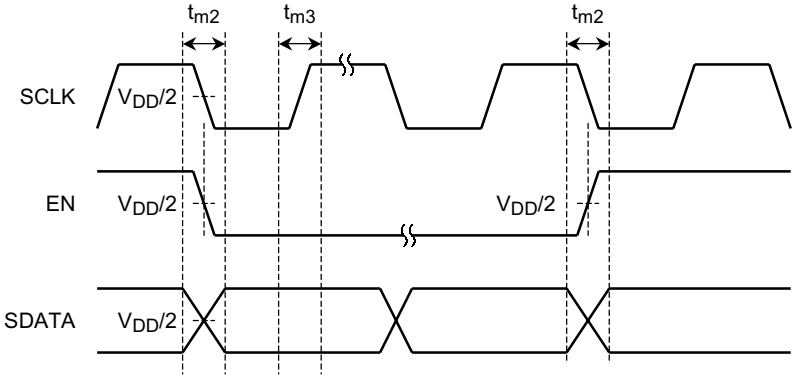

Pixel Configuration

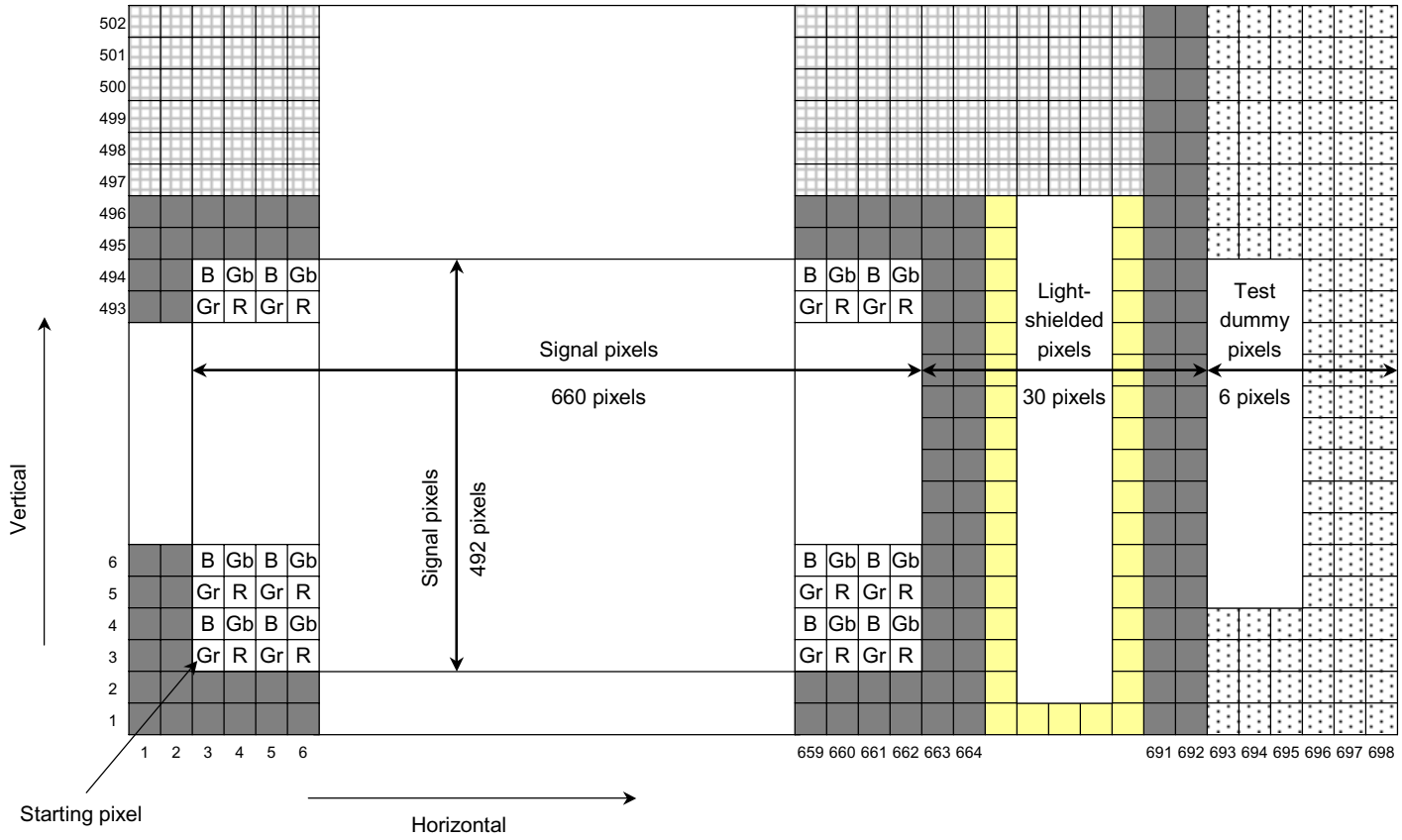

Definition of pixels R: Red pixel Gr/Gb: Green pixel B: Blue pixel

Light-shielded dummy pixels Light-shielded pixels Test dummy pixels (*) Dummy pixels

*: Light-shielded pixels are used as optical black reference.

Command Input

(1) Amplifier gain
(2) Electronic shutter speed in Internal Synchronization Mode
(3) Monitoring mode

Timing Diagram

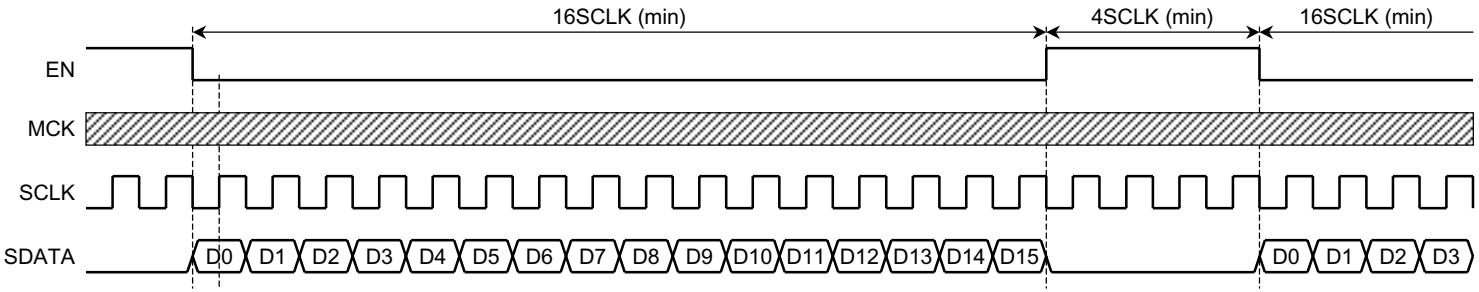

Settings

Item	D15	D14	D13	D12	D11	D10	D9	D8	D7	D6	D5	D4	D3	D2	D1	D0	Note
Gr pixel gain	0	0	0	0	MSB				DATA (10 bit)					LSB	×	×	
R pixel gain	0	0	0	1	MSB				DATA (10 bit)					LSB	×	×	
B pixel gain	0	0	1	0	MSB				DATA (10 bit)					LSB	×	×	
Gb pixel gain	0	0	1	1	MSB				DATA (10 bit)					LSB	×	×	
Electronic shutter speed	1	0	1	0	MSB				DATA (10 bit)					LSB	×	×	From 2H to 524H
Monitoring mode	1	1	1	1	0	0/1	0	0	0	0	0	0	0	0	0	0	0: Normal 1: Monitoring mode

Command Input Settings

(1) Amplifier gain setting
The gains for the Gr, R, B and Gb pixels can be set independently.
Normally the same setting value is used for each pixel type.

♦ Examples

Settings										Value	Gain Factor
1	1	1	1	1	1	1	1	1	1	1023	0.75 (min)
1	1	0	0	0	0	0	0	0	0	768	1 (default)
0	1	1	0	0	0	0	0	0	0	384	2
0	0	1	1	0	0	0	0	0	0	192	4
0	0	0	1	1	0	0	0	0	0	96	8
0	0	0	1	0	0	1	1	0	1	77	10 (recommended max)

(2) Electronic shutter speed in Internal Synchronization Mode

♦ Examples

Settings										Storage Time
0	0	0	0	0	0	0	0	0	0	OFF (default)
0	0	0	0	0	0	0	0	0	1	2H
0	0	0	0	0	0	0	0	1	0	3H
~	~	~	~	~	~	~	~	~	~	~
1	0	0	0	0	0	1	0	1	0	523H
1	0	0	0	0	0	1	0	1	1	524H

(3) Monitoring mode
0: Progressive scanning (Normal Mode)
1: Alternate line pairs scanned (Monitoring Mode)

External Synchronization Mode

Vertical period

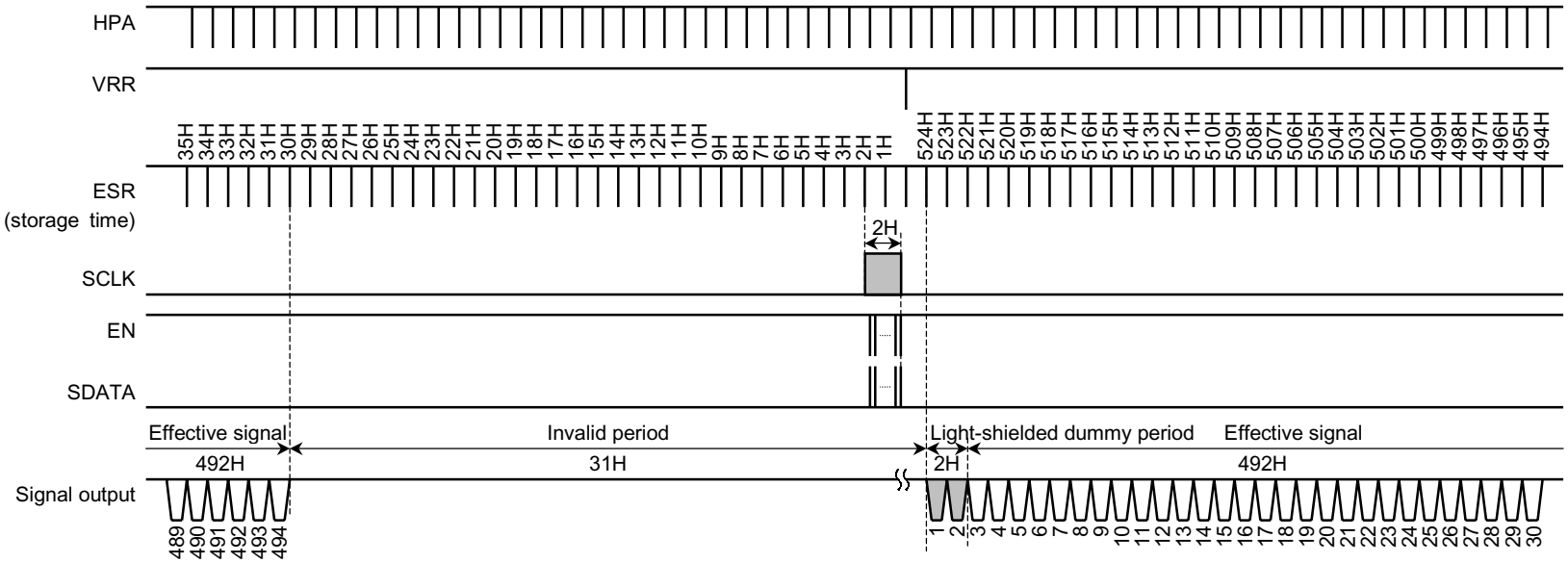

Horizontal period

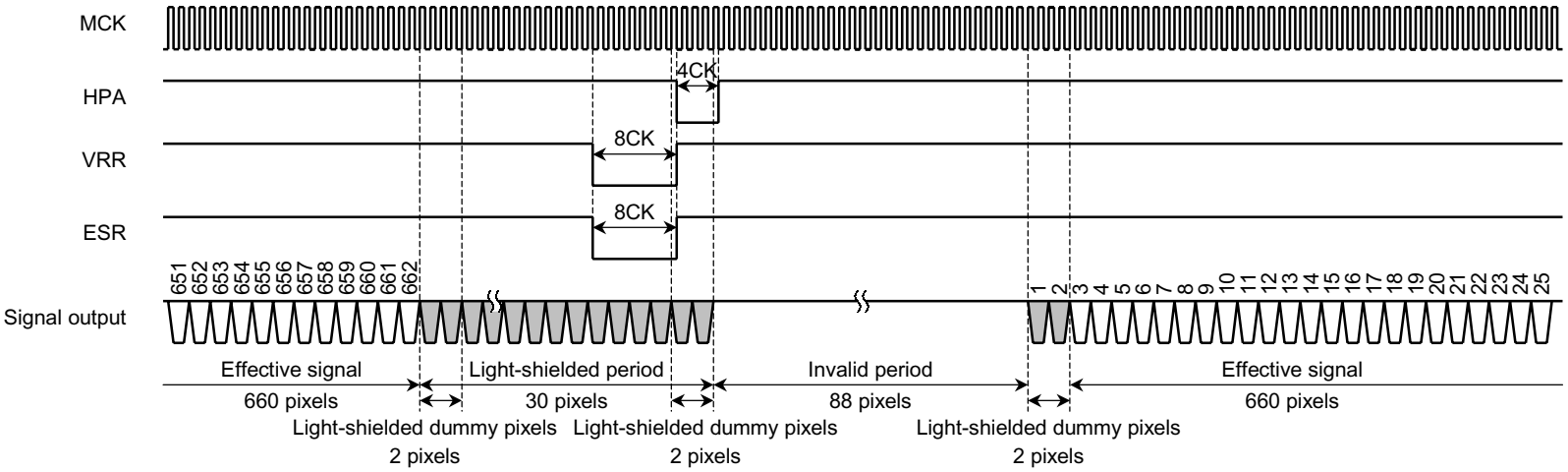

External Synchronization and Monitoring Mode

Vertical period

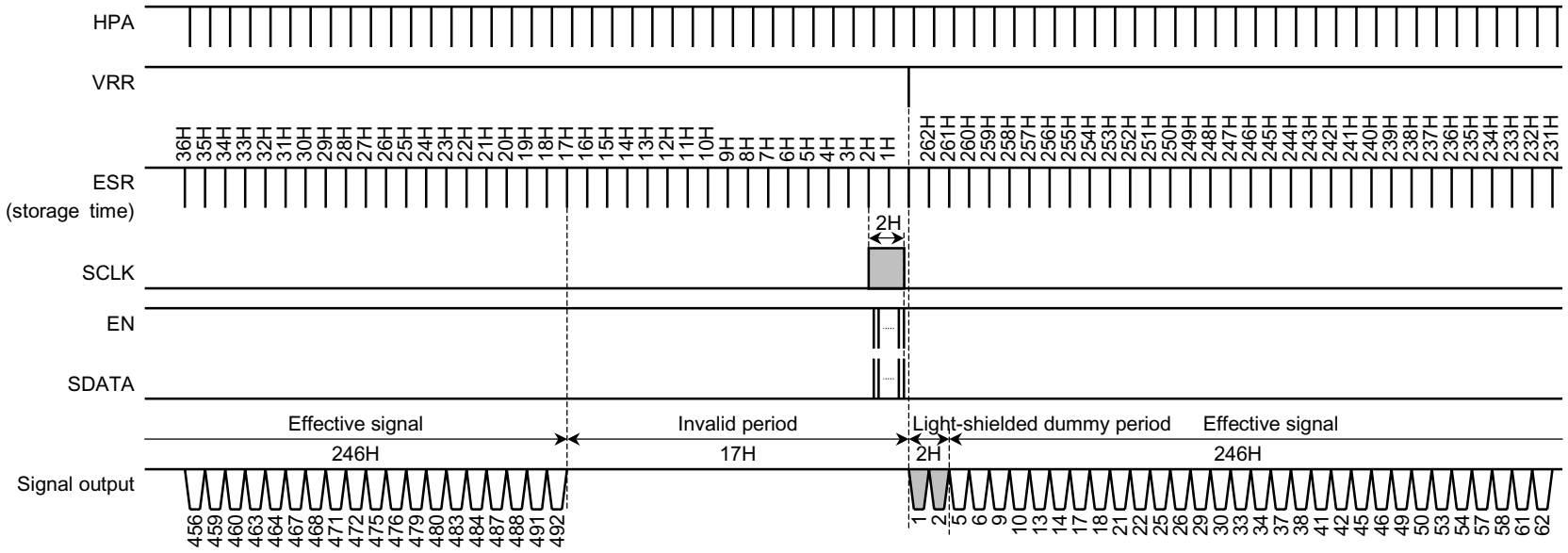

Horizontal period

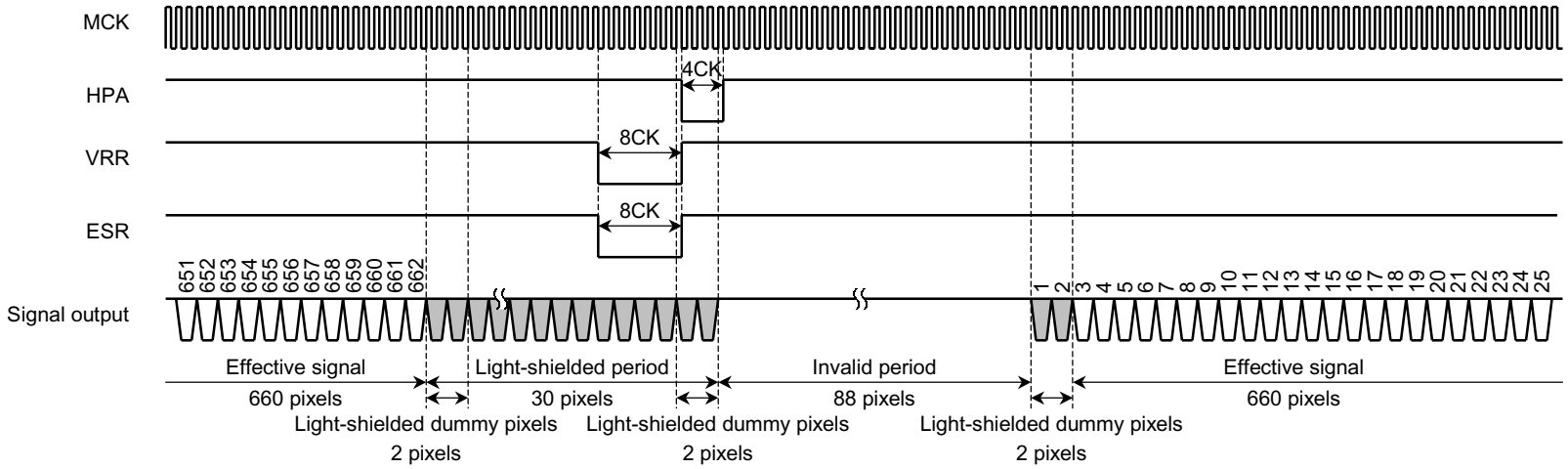

Internal Synchronization and Normal Mode

Vertical period

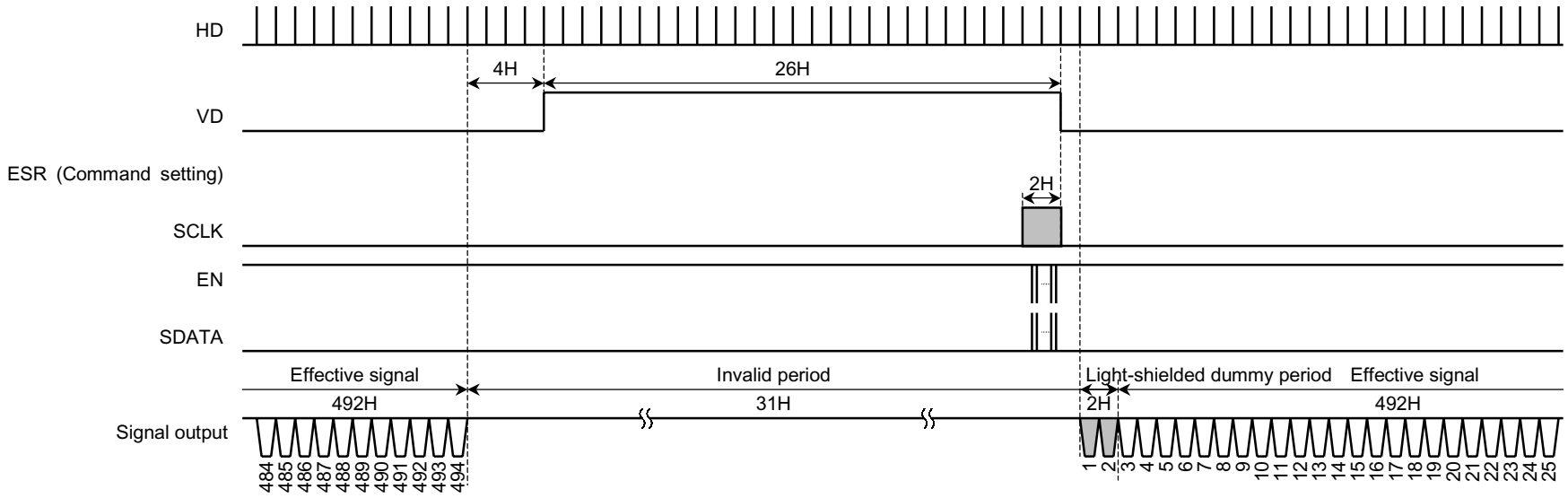

Horizontal period

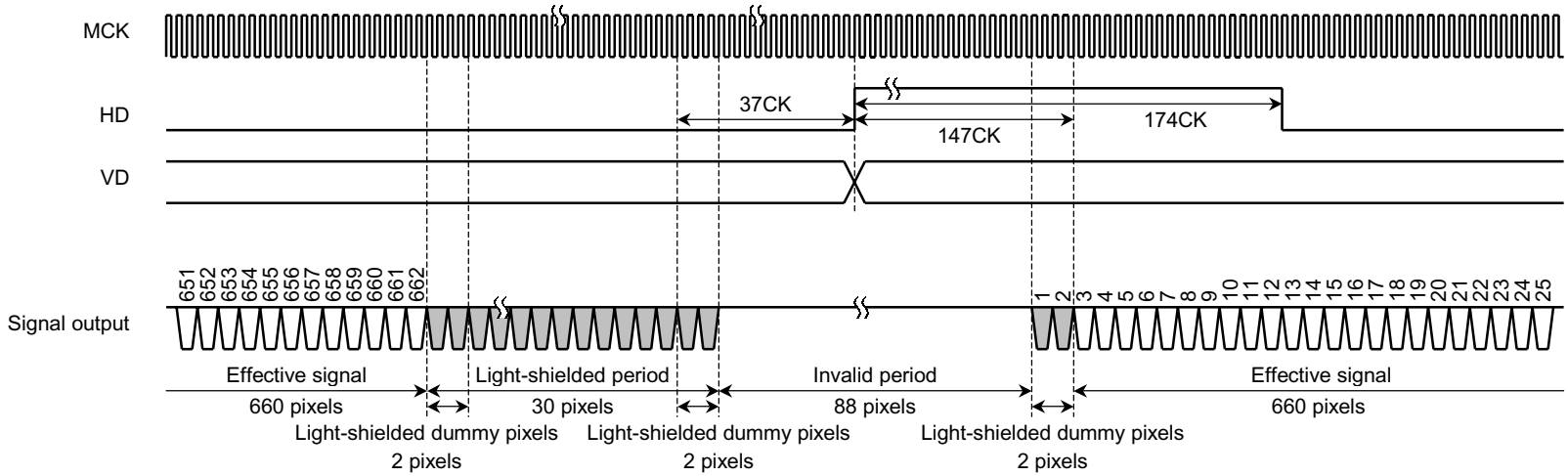

Internal Synchronization and Monitoring Mode

Vertical period

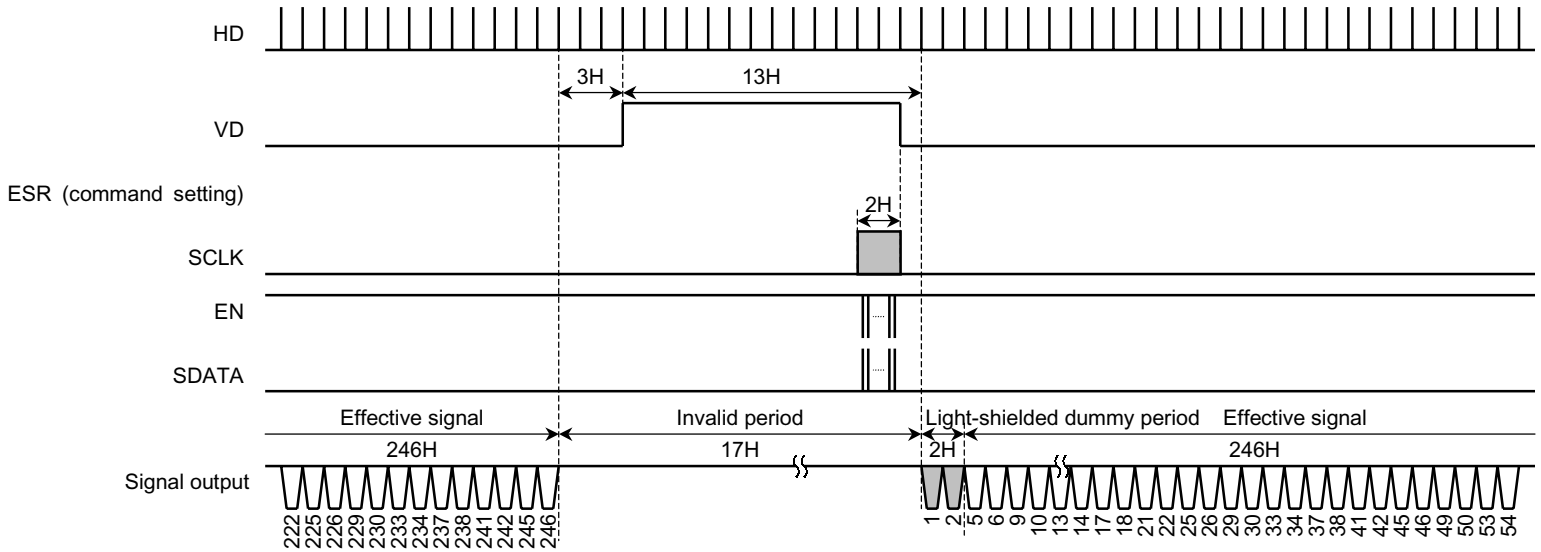

Horizontal period

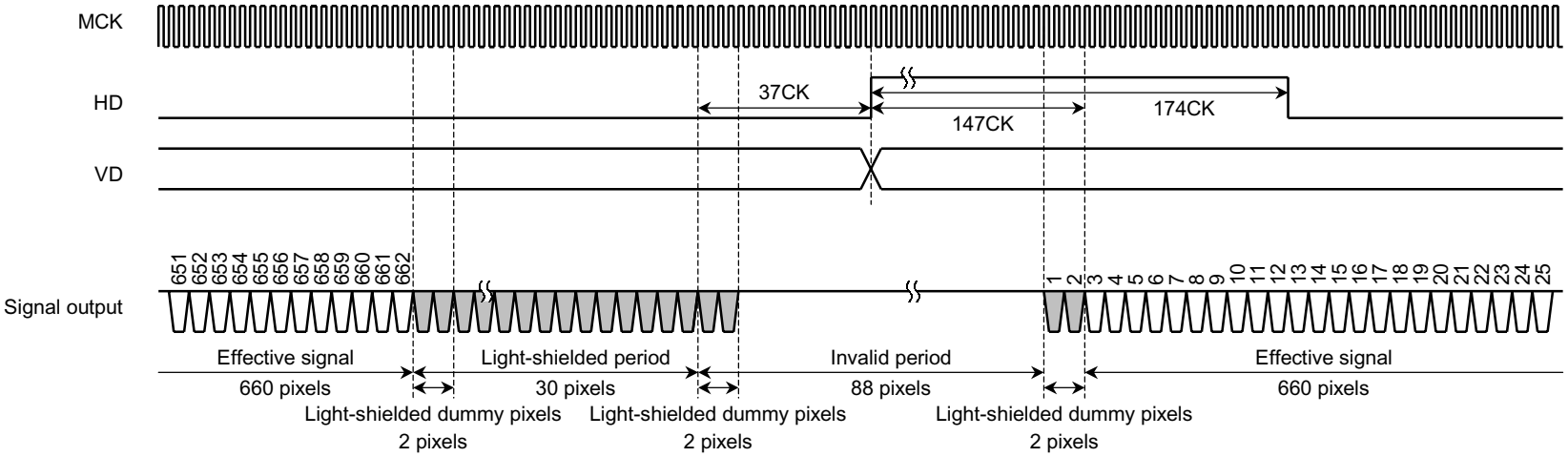

Spectral response

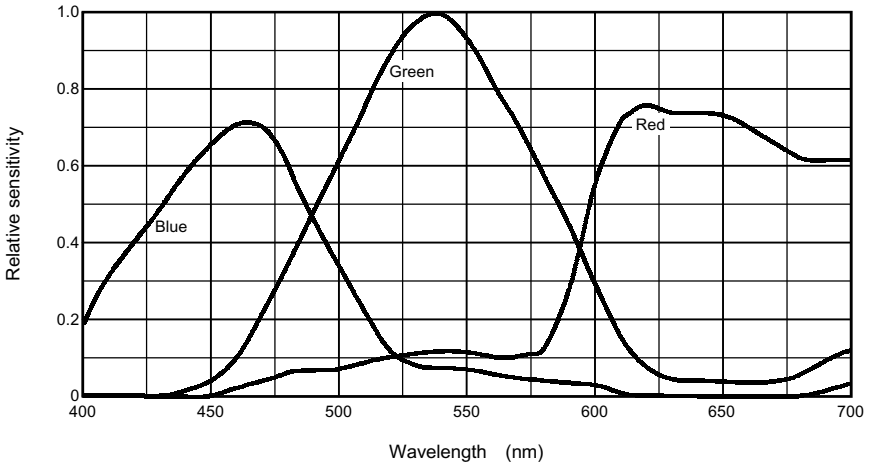

Package Dimensions

WQFN32-C-S420-1.02(A) Unit: mm

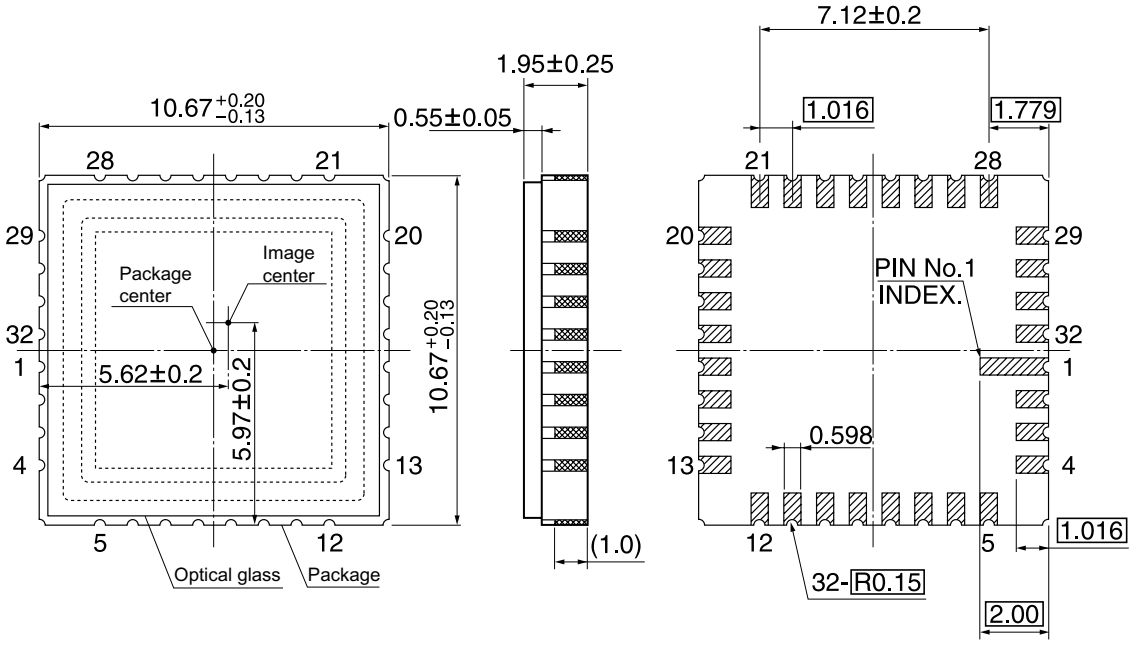

Note) ・Glass size: 10.10 ± 0.05 mm, t = 0.55 ± 0.05 mm
・Glass refractive index: n = 1.52 mm
・Sensor chip direction of rotation accuracy: θ = 1.0° (max)
・The distance from sensor photosensitive face to package rear face: 1.06 ± 0.08 mm

Weight: 0.54 g (typ.)