TOSHIBA BIPOLAR DIGITAL INTEGRATED CIRCUIT SILICON MONOLITHIC

TD62308BP-1, TD62308BF

4ch LOW INPUT ACTIVE HIGE-CURRENT DARLINGTON SINK DRIVER

The TD62308BP-1 and TD62308BF are non-inverting transistor array which are comprised of four NPN darlington output stages and PNP input stages. This device is low level input active driver and are suitable for operation with TTL, 5V CMOS and 5V Microprocessor which have sink current output drivers. Applications include relay, hammer, lamp and stepping motor drivers.

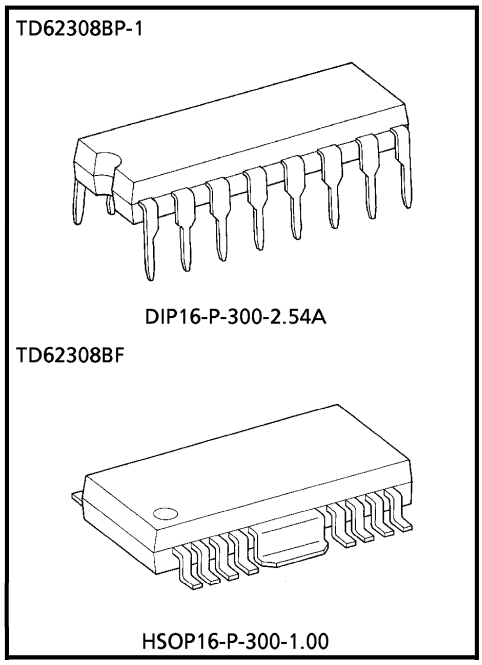

Weight
DIP16-P-300-2.54A : 1.11g (Typ.)
HSOP16-P-300-1.00 : 0.50g (Typ.)

FEATURES

- Two V_{CC} Terminals V_{CC1}, V_{CC2} (Separated)
- Package Type BP-1 : DIP-16pin
  BF : PFP-16pin
- High Sustaining Voltage Output : $V_{CE\,(SUS)} = 80V$ (Min.)
- Output Current (Single Output) : $I_{OUT} = 1.5A$ (Max.)
- Output Clamp Diodes
- Low Level Active Input
- GND and SUB Terminal = Heat Sink
- Input Compatible with TTL and 5V CMOS
- Standard Supply Voltage

PIN CONNECTION (TOP VIEW)

TD62308BP-1

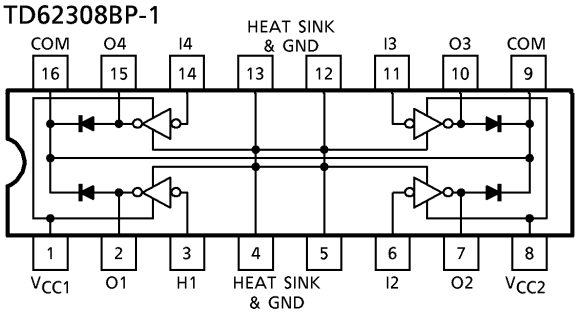

TD62308BF

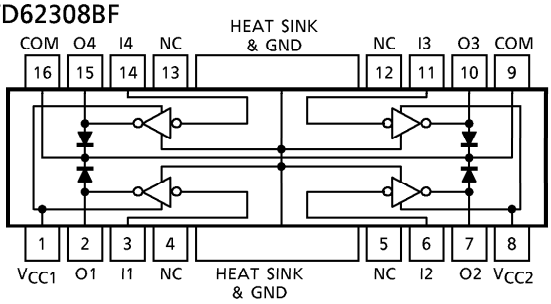

SCHEMATICS (EACH DRIVER)

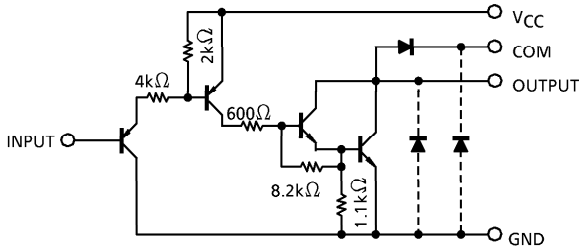

(Note) The output parasitic diode cannot be used as clamp diode.

961001EBA2

● TOSHIBA is continually working to improve the quality and the reliability of its products. Nevertheless, semiconductor devices in general can malfunction or fail due to their inherent electrical sensitivity and vulnerability to physical stress. It is the responsibility of the buyer, when utilizing TOSHIBA products, to observe standards of safety, and to avoid situations in which a malfunction or failure of a TOSHIBA product could cause loss of human life, bodily injury or damage to property. In developing your designs, please ensure that TOSHIBA products are used within specified operating ranges as set forth in the most recent products specifications. Also, please keep in mind the precautions and conditions set forth in the TOSHIBA Semiconductor Reliability Handbook.

MAXIMUM RATINGS (Ta = 25°C)

CHARACTERISTIC		SYMBOL	RATING	UNIT
Supply Voltage		V_{CC}	7	V
Output Sustaining Voltage		$V_{CE\ (SUS)}$	− 0.5~80	V
Parasitic Transistor Output Voltage		V_{CEF} (*1)	80	V
Output Current		I_{OUT}	1.5	A / ch
Input Current		I_{IN}	− 10	mA
Input Voltage		V_{IN}	7	V
Clamp Diode Reverse Voltage		V_R	80	V
Clamp Diode Forward Current		I_F	1.5	A
Power Dissipation	BP-1	P_D	1.47 / 2.7 (*2)	W
	BF		0.9 / 1.4 (*3)	
Operating Temperature		T_{opr}	− 40~85	°C
Storage Temperature		T_{stg}	− 55~150	°C

(*1) Parasitic Transistor (COMMON - GND - OUTPUT) Output Voltage
(*2) On Glass Epoxy PCB (50 × 50 × 1.6mm Cu 50%)
(*3) On Glass Epoxy PCB (60 × 30 × 1.6mm Cu 30%)

RECOMMENDED OPERATING CONDITIONS (Ta = − 40~85°C)

CHARACTERISTIC		SYMBOL	CONDITION		MIN.	TYP.	MAX.	UNIT
Supply Voltage		V_{CC}	—		4.5	—	5.0	V
Output Sustaining Voltage		$V_{CE\ (SUS)}$	—		0	—	80	V
Output Current	BP-1 (*1)	I_{OUT}	DC 1 Circuit, Ta = 25°C		0	—	1.25	A / ch
			T_{pw} = 25ms, 4 Circuits, T_j = 120°C, Ta = 85°C	Duty = 10%	0	—	1.20	
				Duty = 50%	0	—	0.35	
	BF (*2)			Duty = 10%	0	—	0.75	
				Duty = 50%	0	—	0.18	
Input Voltage		V_{IN}	—		0	—	25	V
	Output On	$V_{IN\ (ON)}$	—		0	—	V_{CC} − 3.6	V
	Output Off	$V_{IN\ (OFF)}$	—		V_{CC} − 1.0	—	V_{CC}	
Clamp Diode Reverse Voltage		V_R	—		—	—	80	V
Clamp Diode Forward Current		I_F	—		—	—	1.25	A
Power Dissipation	BP-1	P_D	Ta = 85°C (*1)		—	—	1.4	W
	BF		Ta = 85°C (*2)		—	—	0.7	

(*1) On Glass Epoxy PCB (50 × 50 × 1.6mm Cu 50%)
(*2) On Glass Epoxy PCB (60 × 30 × 1.6mm Cu 30%)

961001EBA2'

- The products described in this document are subject to foreign exchange and foreign trade control laws.
- The information contained herein is presented only as a guide for the applications of our products. No responsibility is assumed by TOSHIBA CORPORATION for any infringements of intellectual property or other rights of the third parties which may result from its use. No license is granted by implication or otherwise under any intellectual property or other rights of TOSHIBA CORPORATION or others.
- The information contained herein is subject to change without notice.

ELECTRICAL CHARACTERISTICS (Ta = 25°C Unless otherwise noted)

CHARACTERISTIC		SYMBOL	TEST CIR-CUIT	TEST CONDITION	MIN.	TYP.	MAX.	UNIT
Input Voltage	"H" level	V_{IH}	—	—	V_{CC} − 1.6	—	V_{CC}	V
	"L" level	V_{IL}	—	—	—	—	V_{CC} − 3.6	
Input Current	"H" level	I_{IH}	2	—	—	—	10	μA
	"L" level	I_{IL}	2	V_{CC} = 5.5V, V_{IN} = 0.4V	—	− 0.05	− 0.36	mA
Output Leakage Current		I_{CEX}	1	V_{OUT} = 80V, Ta = 25°C	—	—	50	μA
				V_{OUT} = 80V, Ta = 85°C	—	—	100	
Output Saturation Voltage		$V_{CE\ (sat)}$	3	V_{CC} = 4.5V, I_{OUT} = 1.25A	—	1.3	1.8	V
Clamp Diode Reverse Current		I_R	4	V_R = 80V, Ta = 25°C	—	—	50	μA
Clamp Diode Forward Voltage		V_F	5	I_F = 1.25A	—	1.5	2.0	V
Supply Current	Output On	$I_{CC\ (ON)}$	2	V_{CC} = 5.5V, V_{IN} = 0V	—	8.5	12.5	mA / ch
	Output Off	$I_{CC\ (OFF)}$	2	V_{CC} = 5.5V, V_{IN} = V_{CC}	—	—	10	μA
Turn-On Delay		t_{ON}	6	V_{OUT} = 80V, R_L = 68Ω	—	0.2	—	μs
Turn-Off Delay		t_{OFF}			—	5.0	—	
Parasitic Transistor Output Voltage		V_{CEF}	7	I_{CEF} = 150mA	80	—	—	V

TEST CIRCUIT

1. I_{CEX}

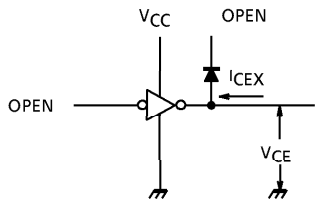

2. I_{CC}, I_{IN}

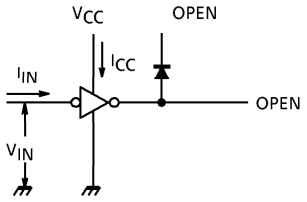

3. $V_{CE\ (sat)}$

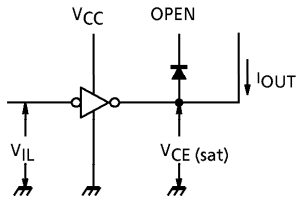

4. I_R

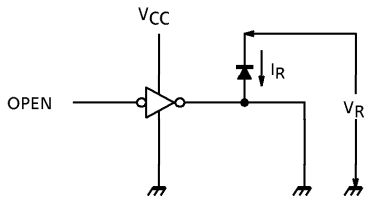

5. V_F

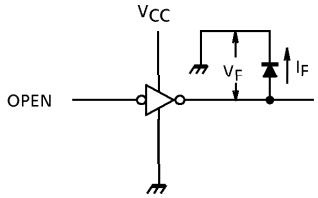

6. t_{ON}, t_{OFF}

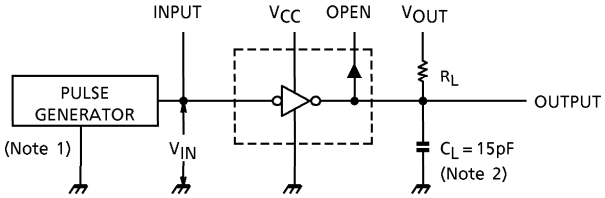

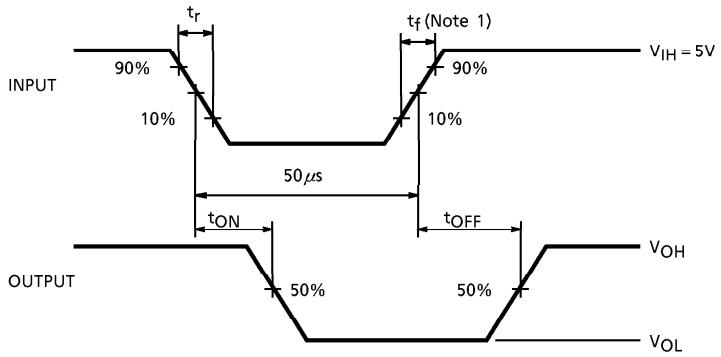

(Note 1) Pulse Width 50μs, Duty Cycle 10%、
Output Impedance 50Ω, $t_r \leqq 5$ns, $t_f \leqq 10$ns

(Note 2) CL includes probe and jig capacitance

7. V_{cef}

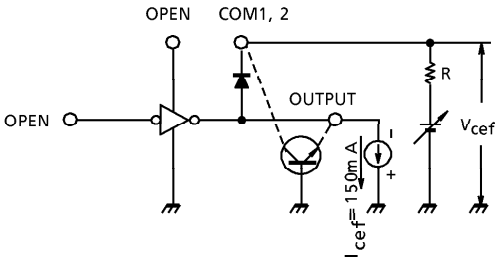

I_{cef} = 150mA
(at Single Pulse = 5ms)

PRECAUTIONS for USING

Utmost care is necessary in the design of the output line, V_{CC}, COMMON and GND line since IC may be destroyed due to short-circuit between outputs, air contamination fault, or fault by improper grounding.

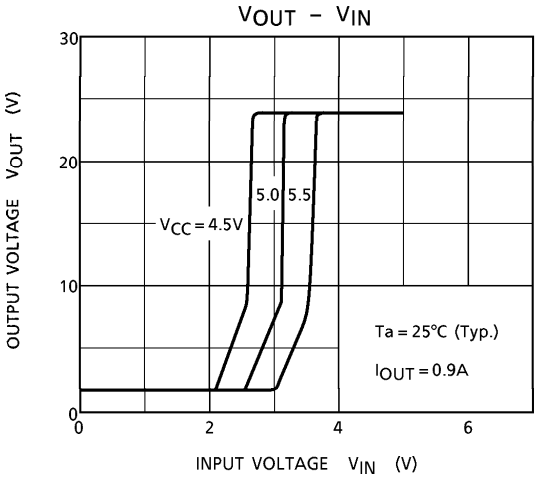
VOUT – VIN
OUTPUT VOLTAGE VOUT (V)
INPUT VOLTAGE VIN (V)
VCC = 4.5V
5.0
5.5
Ta = 25°C (Typ.)
IOUT = 0.9A

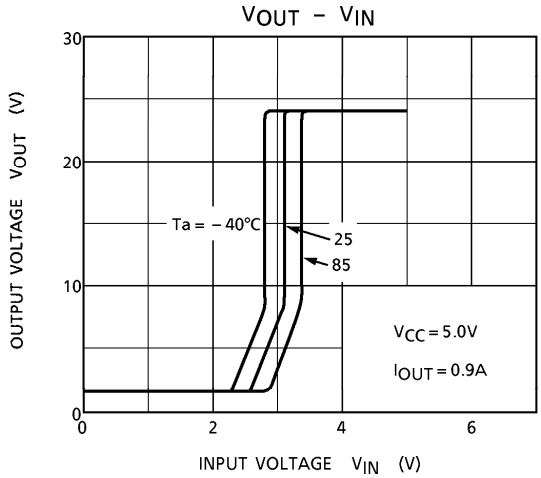
VOUT – VIN
OUTPUT VOLTAGE VOUT (V)
INPUT VOLTAGE VIN (V)
Ta = – 40°C
25
85
VCC = 5.0V
IOUT = 0.9A

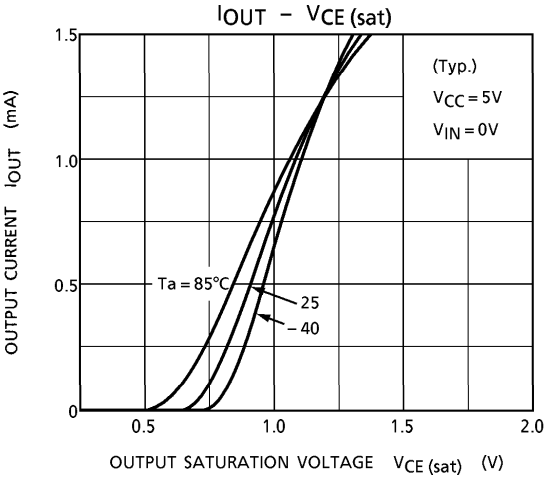
IOUT – VCE (sat)
OUTPUT CURRENT IOUT (mA)
OUTPUT SATURATION VOLTAGE VCE (sat) (V)
(Typ.)
VCC = 5V
VIN = 0V
Ta = 85°C
25
– 40

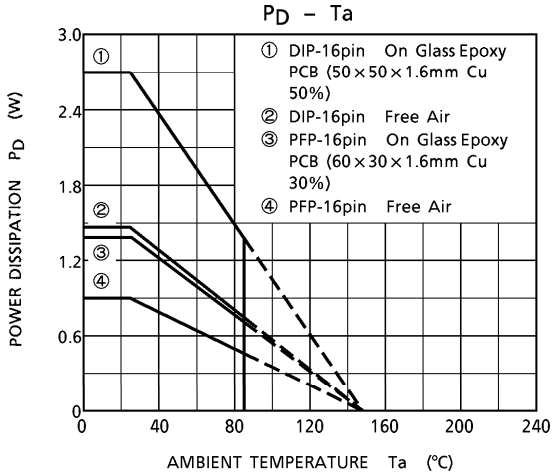
PD – Ta
POWER DISSIPATION PD (W)
AMBIENT TEMPERATURE Ta (°C)
① DIP-16pin On Glass Epoxy PCB (50×50×1.6mm Cu 50%)
② DIP-16pin Free Air
③ PFP-16pin On Glass Epoxy PCB (60×30×1.6mm Cu 30%)
④ PFP-16pin Free Air

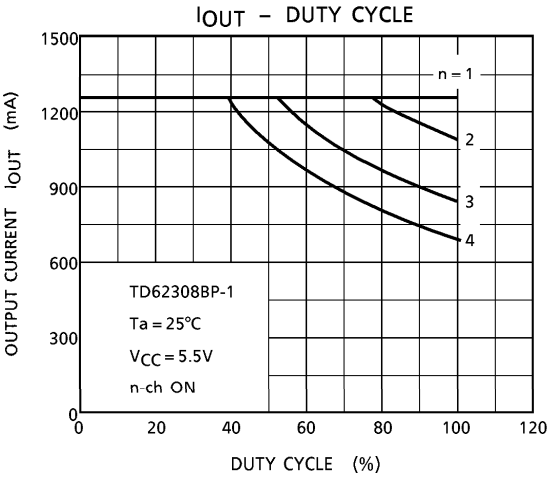
IOUT – DUTY CYCLE
OUTPUT CURRENT IOUT (mA)
DUTY CYCLE (%)
n = 1
2
3
4
TD62308BP-1
Ta = 25°C
VCC = 5.5V
n-ch ON

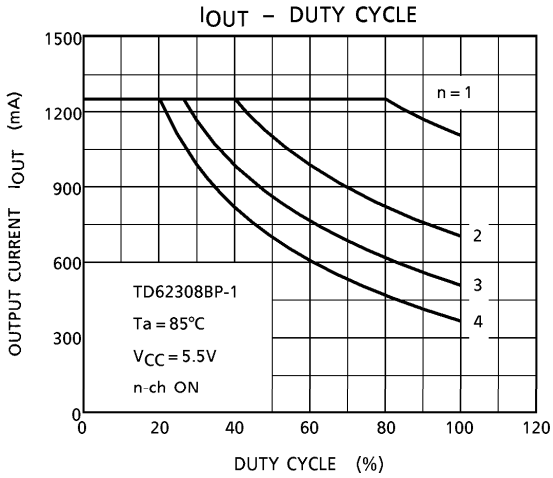
IOUT – DUTY CYCLE
OUTPUT CURRENT IOUT (mA)
DUTY CYCLE (%)
n = 1
2
3
4
TD62308BP-1
Ta = 85°C
VCC = 5.5V
n-ch ON

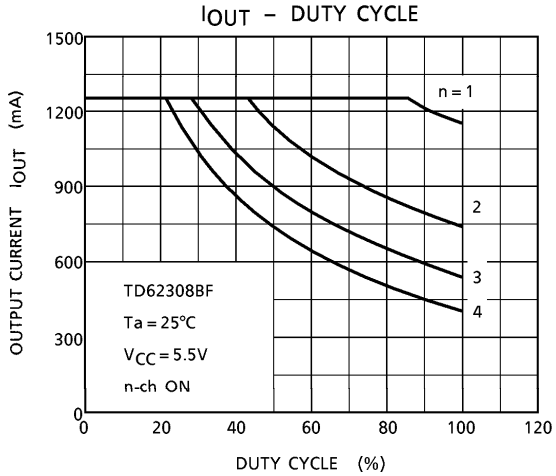
IOUT – DUTY CYCLE
OUTPUT CURRENT IOUT (mA)
1500
1200
900
600
300
0
0
20
40
60
80
100
120
DUTY CYCLE (%)
n = 1
2
3
4
TD62308BF
Ta = 25°C
VCC = 5.5V
n-ch ON

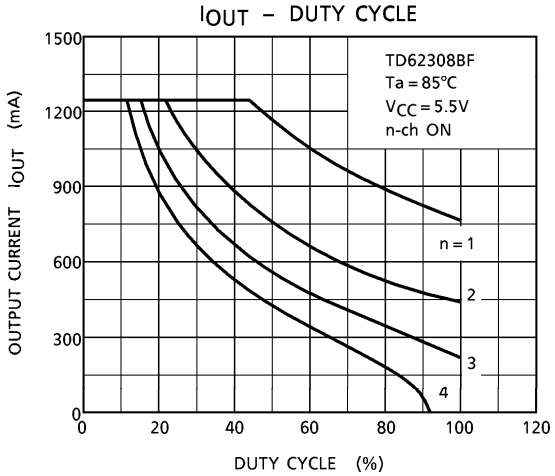
IOUT – DUTY CYCLE
OUTPUT CURRENT IOUT (mA)
1500
1200
900
600
300
0
0
20
40
60
80
100
120
DUTY CYCLE (%)
TD62308BF
Ta = 85°C
VCC = 5.5V
n-ch ON
n = 1
2
3
4

OUTLINE DRAWING

DIP16-P-300-2.54A

Unit : mm

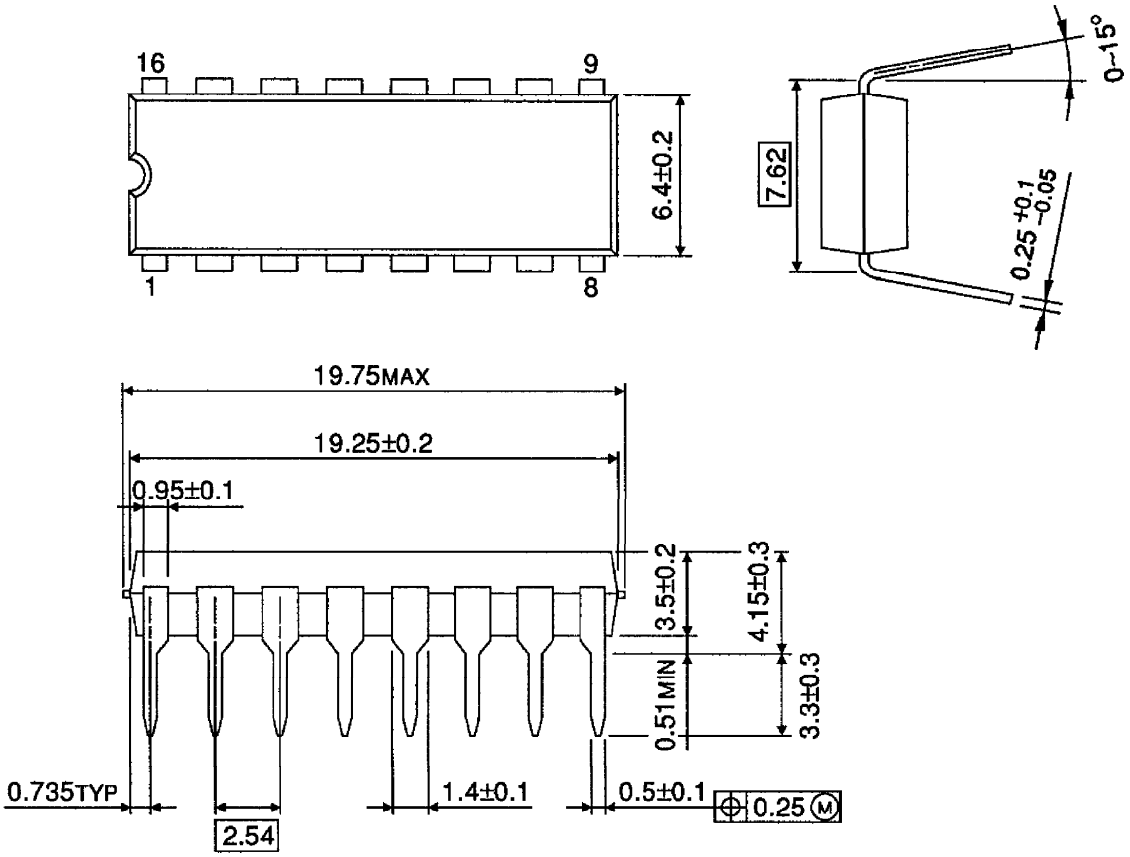

Weight : 1.11g (Typ.)

OUTLINE DRAWING

HSOP16-P-300-1.00

Unit : mm

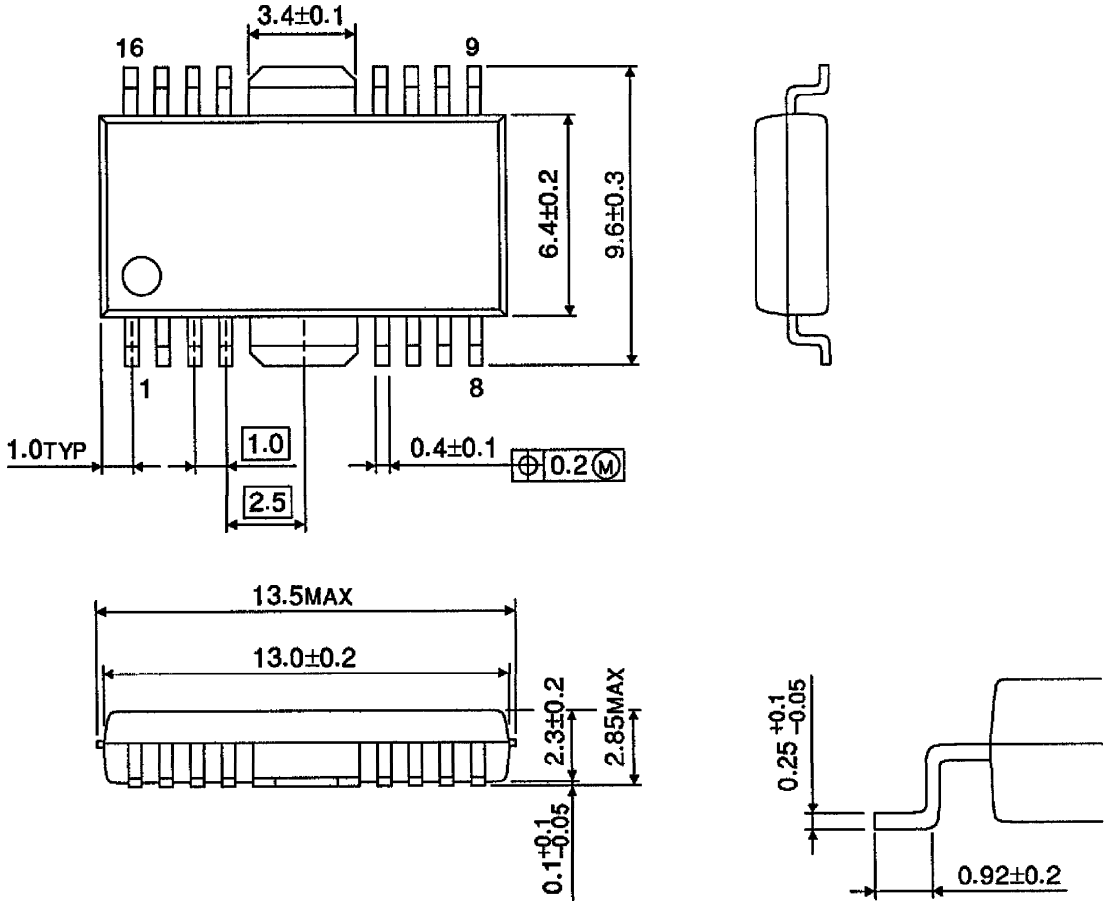

Weight : 0.50g (Typ.)