TOSHIBA Bipolar Linear Integrated Circuit Silicon Monolithic

# TA2018FNG

DC / DC Converter For Electric Tuning (1.5V USE)

The TA2018FNG is a DC / DC converter IC which is developed for biasing variable capacitance diodes of tuner system. It is especially suitable for supplying high voltage (about 14.3V) for digital tuning (FM / TV / AM) system at low power operation.

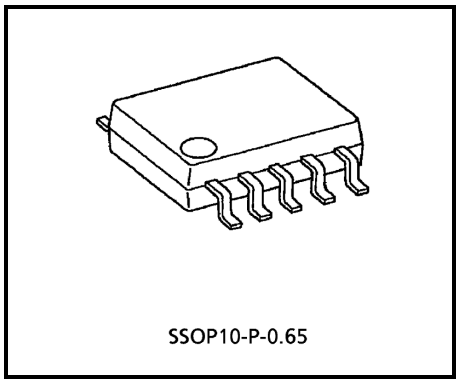


Weight: 0.04g (typ.)

## Features

- Few external parts.
- Excellent spurious radiation by oscillation of sine wave.
- Output voltage: $V_O$ = 14.3V (typ.)
- Excellent regulatory capability of output voltage against fluctuation of supply voltage, and of ambient temperature.
- Built−in constant current source, it is suitable for digital
- tuning system. ($I_{CTL}$ can be controlled by $R_{CTL}$)
- Built−in power switch.
- Low supply current ($V_{CC}$ = 1.2V, Ta = 25°C, $I_O$ = 30μA)
  $I_{CC}$ = 2.1mA (typ.)
- Operating supply voltage range (Ta = 25°C)
  $V_{CC}$ (opr) = 0.9~4V

## Marking

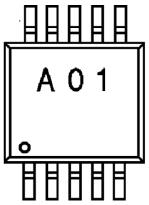


## Block Diagram

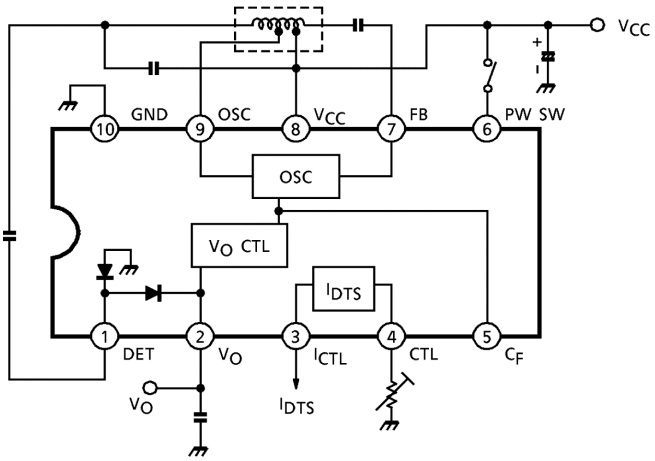

## Terminal Explanation

Terminal Voltage: Typical Terminal Voltage with Test Circuit ($V_{CC}$ = 1.2V, Ta = 25°C)

| Terminal No. | Terminal Name | Function | Internal Circuit | Terminal Voltage (V) |
|---|---|---|---|---|
| 1 | DET | ・Boosted output (voltage double rectifier) | 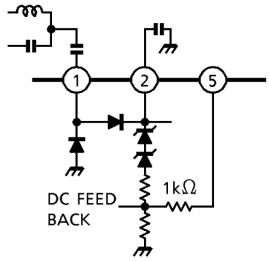 | — |
| 2 | $V_O$ | | | 14.3 |
| 5 | $C_F$ | ・Don't connect any external parts with this terminal | | 0.4 |
| 3 | $I_{CTL}$ | ・Constant current source $V_O$ supplies this circuit with power source. (For digital tuning) | 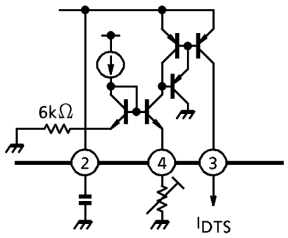 | — |
| 4 | CTL | | | — |
| 6 | PW SW | ・Power on / off switch<br>$V_{CC}$: Power on<br>OPEN / GND: Power off | 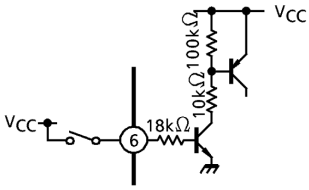 | — |
| 7 | FB | ・Hartley type oscillator<br>$f_{osc} \fallingdotseq \frac{1}{2\pi\sqrt{L_3 \cdot C_1}}$<br>・Controlling oscillation current at the terminal of FB | 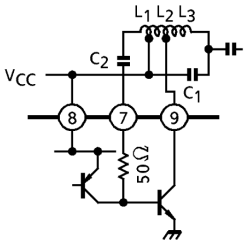 | 0.7 |
| 8 | $V_{CC}$ | | | 1.2 |
| 9 | OSC | | | — |
| 10 | GND | — | — | 0 |

## Application Note

1. PW SW

It is necessary to connect an external pull–down resistor with the terminal PW SW (pin 6), in case that this IC is turned on due to external noise etc.

2. Designing of coil

This IC has the output voltage by means of boosting the oscillation voltage, derived from Hartley type oscillator circuit and of voltage–double rectifier with $C_3$, $D_1$ and $D_2$.

(1) Designing of oscillation frequency

$$f_{osc} \fallingdotseq \frac{1}{2\pi\sqrt{L_3 \cdot C_2}}$$

(2) Coil turns can be designed as following:

$V_{osc\ (p-p)} = 2\ (V_{CC\ (min)} - V_{CE1\ (sat)})$

$$n = \frac{n3}{n2} \fallingdotseq \frac{V_O}{V_{osc\,(p\text{-}p)}}$$

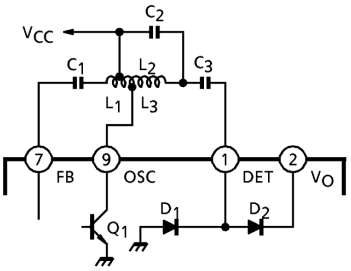


Fig.1 Oscillator and Voltage-Double

(Note) $V_{CC\ (min)}$ : Minimum of supply voltage designed by a equipment
$V_{CE1\ (sat)}$: Saturation voltage of $Q_1$
n : Coil turns ratio ($L_2$, $L_3$)
$V_O$ : Output voltage ($V_O \fallingdotseq 14.3V$)

The turn of $L_1$ is designed, so as to make the terminal of FB be about 200~300m$V_{p-p}$ through $C_1$. The turn of $L_1$ should be small, and the capacitance of $C_1$ and $Q_0$ of coil should be large, for the oscillation start at turning power on.

(3) Allowance is advisable for coil design of n, $Q_0$. However, spurious radiation can be reduced, in case that the output current and n of coil don't make large.

3. Pattern diagram

The Fig.2 shows the oscillation loop. This pattern diagram should be small, because spurious radiation due to the oscillation is reduced.

The Fig.3 shows the rectifier loop. This pattern diagram should be the small, because spurious radiation due to the switching rectifier is reduced. The two loops should be isolated from other DC lines.

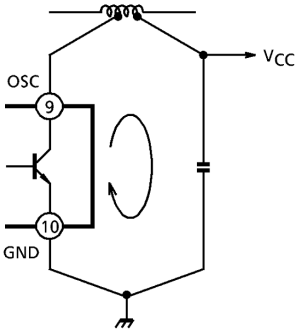


Fig.2 Oscillation Loop

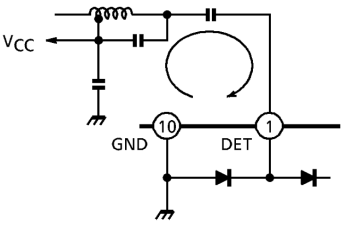


Fig.3 Rectifier Loop

4. Output current
   Total output current ($I_O$ and $I_{CTL}$) should not be smaller than 30μA, because this IC start blocking oscillation etc. Note that this condition will change according to coil setting etc.

5. Terminal $C_F$
   Any external parts should not be connected with this terminal, because this IC doesn't operate normally.

6. $I_{CTL}$
   $I_{CTL}$ can be controlled by $R_{CTL}$ resistor between pin 4 and GND, note that $I_{CTL}$ should be set to 180μA or smaller (see Fig.4).

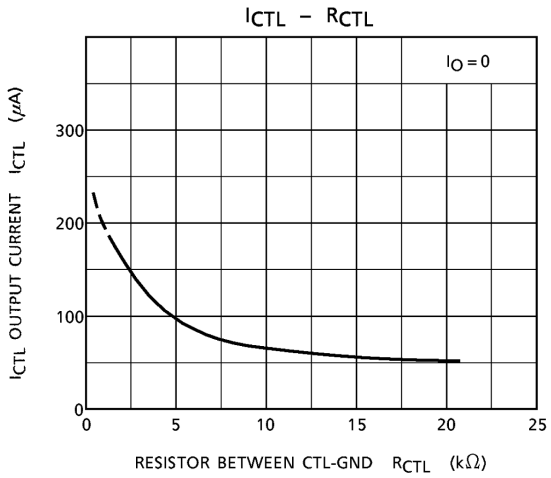


Fig.4 $I_{CTL}$ – $R_{CTL}$

## Maximum Ratings (Ta = 25°C)

| Characteristic | Symbol | Rating | Unit |
|---|---|---|---|
| Supply voltage | $V_{CC}$ | 4.5 | V |
| Output voltage | $V_O$ | 18 | |
| Constant current source circuit output current | $I_{CTL}$ | 5 | mA |
| Power dissipation (Note) | $P_D$ | 300 | mW |
| Operating temperature | $T_{opr}$ | −25~75 | °C |
| Storage temperature | $T_{stg}$ | −55~150 | |

(Note) Derated above Ta = 25°C in the proportion of 2.4mW.

## Electrical Characteristics

Unless Otherwise Specified: $V_{CC}$ = 1.2V, Ta = 25°C, $f_{osc}$ = 3MHz, $I_O$ = 30μA, $SW_1$: a, $SW_2$: a

| Characteristic | Symbol | Test Cir–cuit | Test Condition | Min. | Typ. | Max. | Unit |
|---|---|---|---|---|---|---|---|
| Supply current | $I_{CC1}$ | — | PW OFF, $SW_1$: b | — | — | 5 | μA |
| | $I_{CC2}$ | — | | — | 2.1 | 3 | mA |
| Boosted output voltage | $V_O$ | — | | 13.5 | 14.3 | 15.1 | V |
| $V_O$ supply voltage fluctuation | $\Delta V_O$ | — | $V_{CC}$ = 4V → 0.9V | –20 | 0 | +20 | mV |
| $V_O$ maximum output current | $I_{O\ (MAX)}$ | — | $\Delta V_O$ = 50mV, with respect to standard, $I_{CTL}$ = 30μA | 180 | 300 | — | μA |
| $V_O$ ambient temperature coefficient | $V_O$ / T | — | | — | +1.2 | — | mV / °C |
| Constant current source output current | $I_{CTL}$ | — | $I_O$ = 0, $SW_2$: b ($R_{CTL}$ = 4.7kΩ) | 80 | 100 | 120 | μA |
| $I_{CTL}$ maximum current | $I_{CTL\ (MAX)}$ | — | $I_O$ = 0, $SW_2$: b, (adjust $R_{CTL}$) $\Delta V_O$ = 50mV, with respect to standard, $I_{CTL}$ = 30μA | — | 270 | — | μA |
| Power switch on current | $I_6$ | — | $V_{CC}$ =0.9V, $V_O$ ≥ 13V, $SW_1$: c | 5 | — | — | μA |
| Power switch off voltage | $V_6$ | — | $V_{CC}$ =0.9V, $V_O$ ≤ 3.5V, $SW_1$: d | 0 | — | 0.3 | V |

## Test Circuit

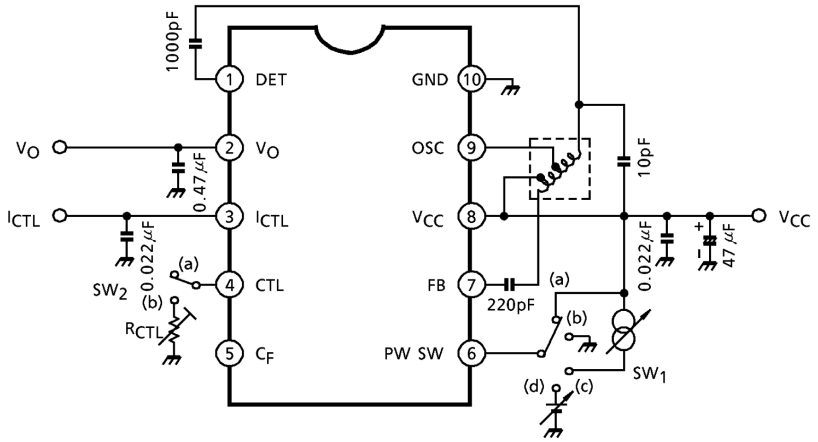


## Coil Data (test circuit)

| Test Frequency | L (μH) | Q | Turn | | | Wire (mmϕ) | Reference |
|---|---|---|---|---|---|---|---|
| | 4–6 | | 6–1 | 1–3 | 3–4 | | |
| 796kHz | 152 | 25 | $2\frac{1}{2}$ | 8 | $89\frac{1}{2}$ | 0.04UEW | SUMIDA ELECTRIC & Co.,Ltd. 5201–018 |

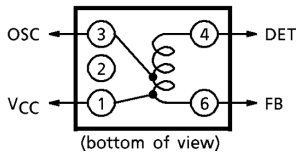

**Characteristic Curves**

Unless Otherwise Specified: $V_{CC}$ = 1.2V, $I_O$ = 30μA, Ta = 25°C, $f_{osc}$ = 3MHz

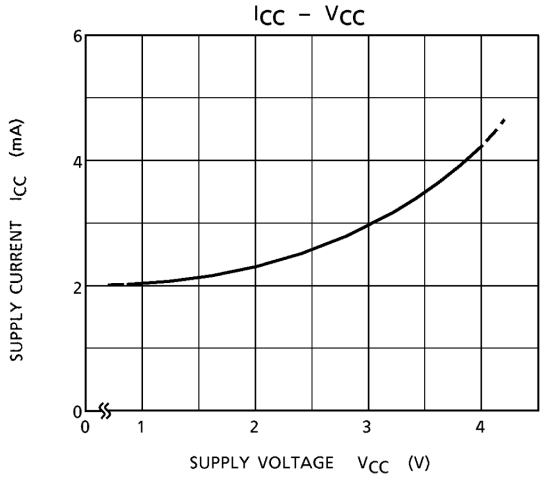


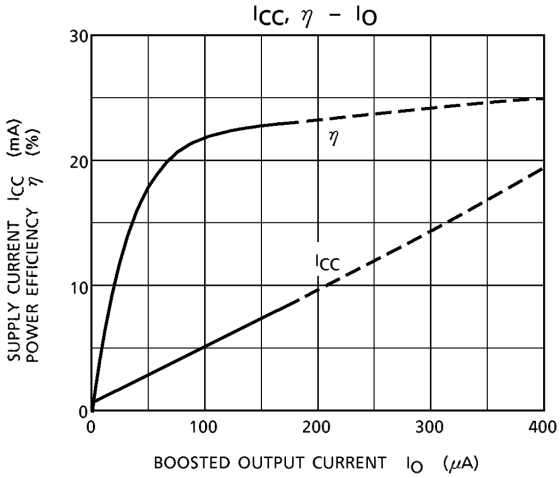


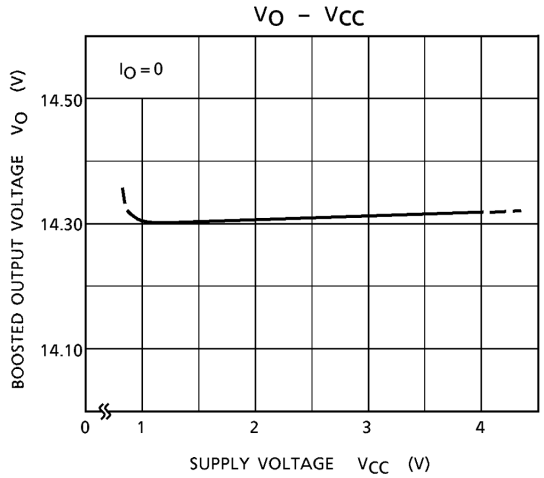


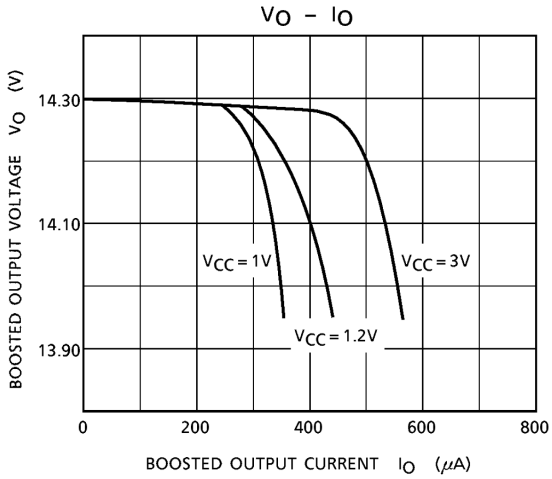


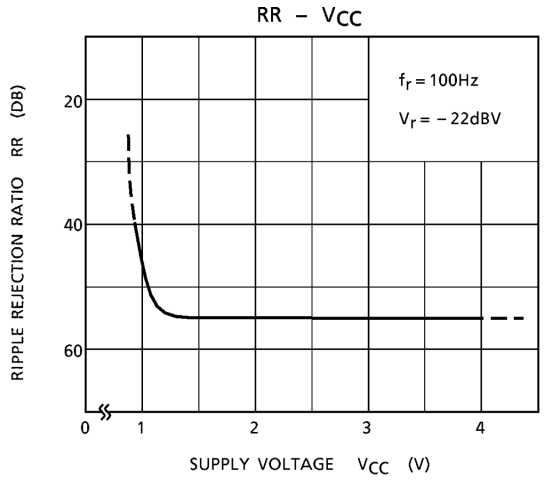


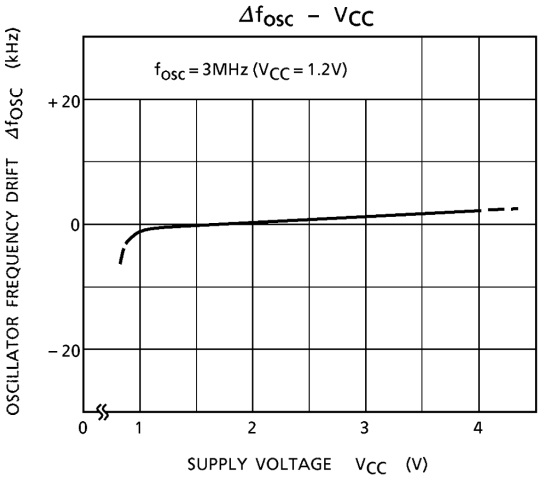

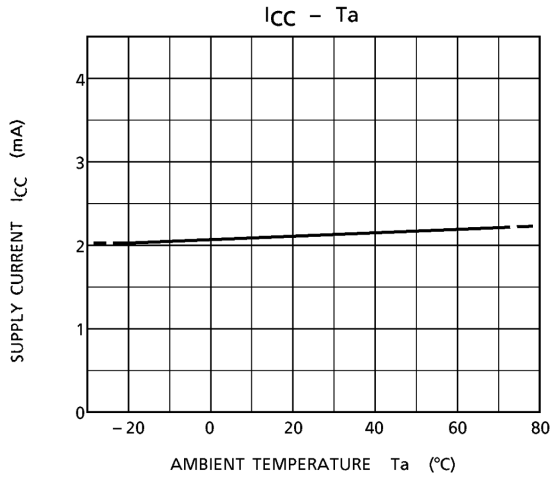
ICC – Ta
SUPPLY CURRENT ICC (mA)
0
1
2
3
4
– 20
0
20
40
60
80
AMBIENT TEMPERATURE Ta (°C)

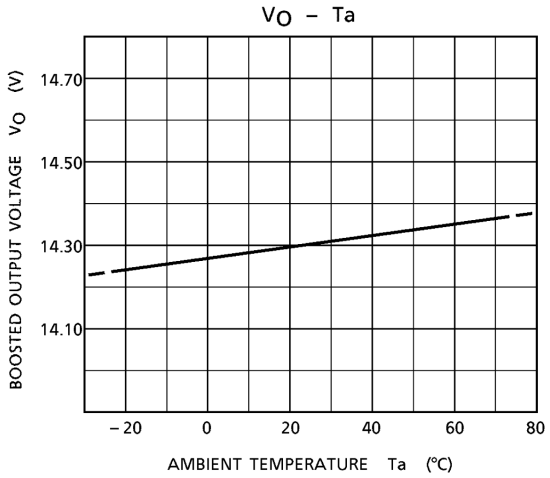
VO – Ta
BOOSTED OUTPUT VOLTAGE VO (V)
14.10
14.30
14.50
14.70
– 20
0
20
40
60
80
AMBIENT TEMPERATURE Ta (°C)

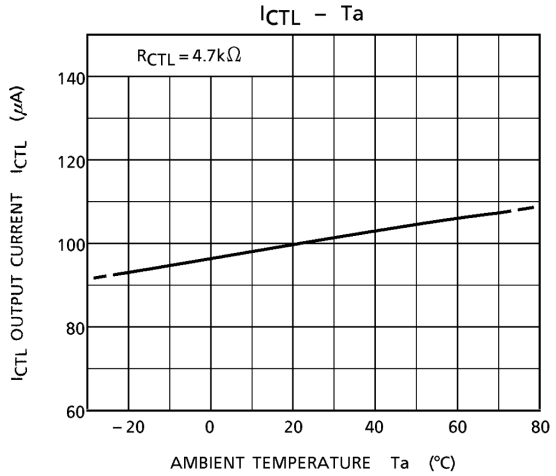
ICTL – Ta
RCTL = 4.7kΩ
ICTL OUTPUT CURRENT ICTL (μA)
60
80
100
120
140
– 20
0
20
40
60
80
AMBIENT TEMPERATURE Ta (°C)

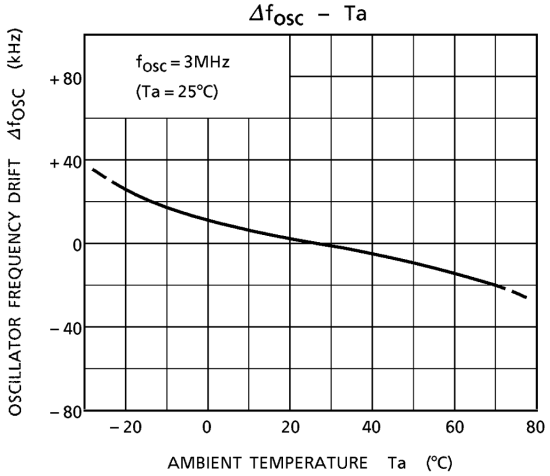
Δfosc – Ta
fosc = 3MHz
(Ta = 25°C)
OSCILLATOR FREQUENCY DRIFT Δfosc (kHz)
– 80
– 40
0
+ 40
+ 80
– 20
0
20
40
60
80
AMBIENT TEMPERATURE Ta (°C)

## Package Dimensions

SSOP10-P-0.65 Unit : mm

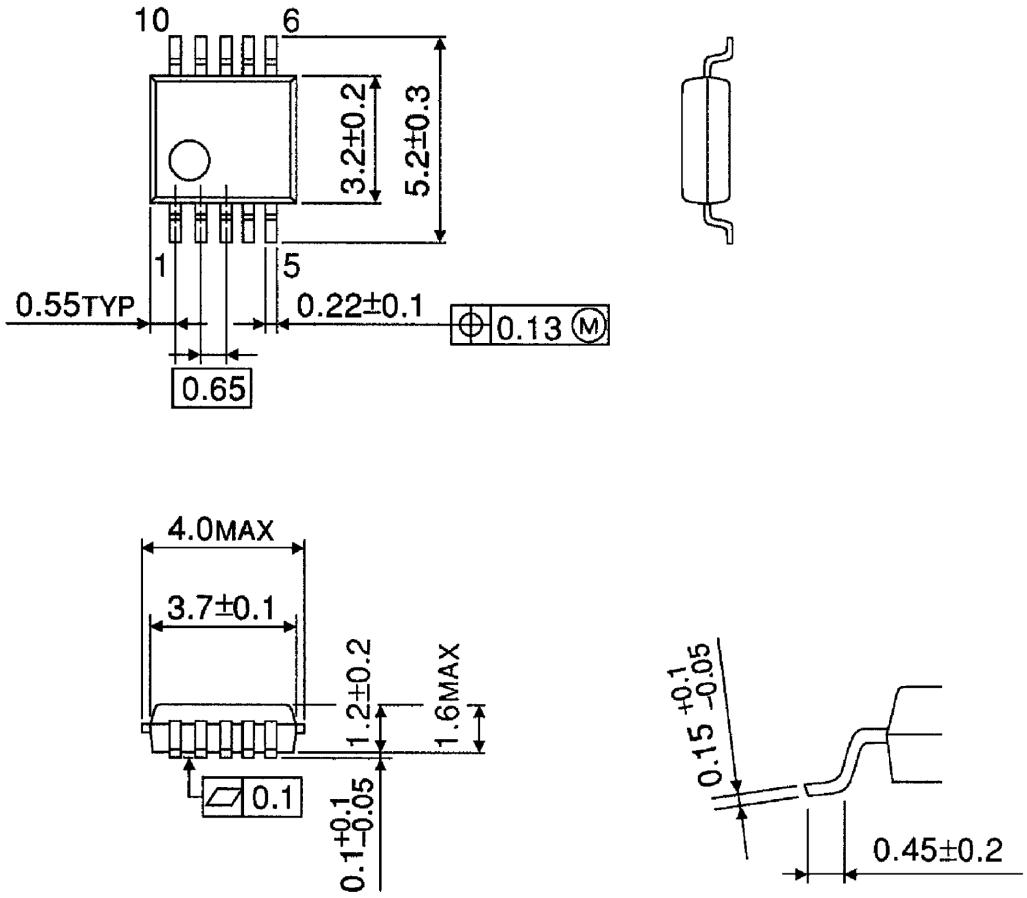


Weight: 0.04g (typ.)

About solderability, following conditions were confirmed

- Solderability

(1) Use of Sn-63Pb solder Bath
- solder bath temperature = 230°C
- dipping time = 5 seconds
- the number of times = once
- use of R-type flux

(2) Use of Sn-3.0Ag-0.5Cu solder Bath
- solder bath temperature = 245°C
- dipping time = 5 seconds
- the number of times = once
- use of R-type flux

## RESTRICTIONS ON PRODUCT USE

030619EBA

- The information contained herein is subject to change without notice.
- The information contained herein is presented only as a guide for the applications of our products. No responsibility is assumed by TOSHIBA for any infringements of patents or other rights of the third parties which may result from its use. No license is granted by implication or otherwise under any patent or patent rights of TOSHIBA or others.
- TOSHIBA is continually working to improve the quality and reliability of its products. Nevertheless, semiconductor devices in general can malfunction or fail due to their inherent electrical sensitivity and vulnerability to physical stress. It is the responsibility of the buyer, when utilizing TOSHIBA products, to comply with the standards of safety in making a safe design for the entire system, and to avoid situations in which a malfunction or failure of such TOSHIBA products could cause loss of human life, bodily injury or damage to property.
  In developing your designs, please ensure that TOSHIBA products are used within specified operating ranges as set forth in the most recent TOSHIBA products specifications. Also, please keep in mind the precautions and conditions set forth in the “Handling Guide for Semiconductor Devices,” or “TOSHIBA Semiconductor Reliability Handbook” etc..
- The TOSHIBA products listed in this document are intended for usage in general electronics applications (computer, personal equipment, office equipment, measuring equipment, industrial robotics, domestic appliances, etc.). These TOSHIBA products are neither intended nor warranted for usage in equipment that requires extraordinarily high quality and/or reliability or a malfunction or failure of which may cause loss of human life or bodily injury (“Unintended Usage”). Unintended Usage include atomic energy control instruments, airplane or spaceship instruments, transportation instruments, traffic signal instruments, combustion control instruments, medical instruments, all types of safety devices, etc.. Unintended Usage of TOSHIBA products listed in this document shall be made at the customer’s own risk.
- The products described in this document are subject to the foreign exchange and foreign trade laws.
- TOSHIBA products should not be embedded to the downstream products which are prohibited to be produced and sold, under any law and regulations.