TOSHIBA PHOTOCOUPLER PHOTO RELAY

T L P 3 2 1 4

MEASUREMENT INSTRUMENTS
LOGIC IC TESTERS / MEMORY TESTERS
BOARD TESTERS / SCANNERS

Unit: mm

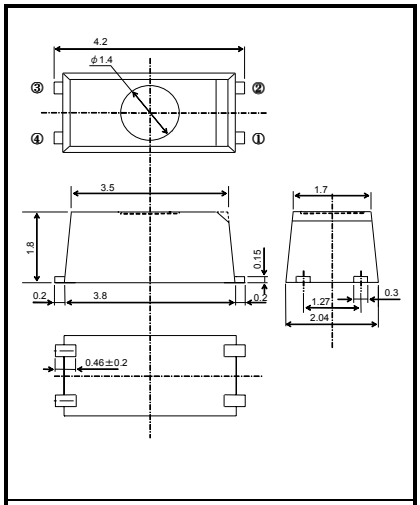

JEDEC	
EIAJ	
TOSHIBA	11-2A1

Weight: 0.03 g

The TOSHIBA TLP3214 is a super small-outline photorelay, suitable for surface-mount assembly. The TLP3214 consists of a GaAs infrared-emitting diode optically coupled to a photo-MOS FET and housed in a 4-pin package.
Its characteristics include low OFF-state current and low output pin capacitance, enabling it to be used in high-frequency measuring instruments.

FEATURES

- 4 pin SSOP (1.27SSOP4) : 1.8 mm high, 1.27 mm pitch
- 1-Form-A
- Peak Off-State Voltage : 40 V (MIN.)
- Trigger LED Current : 4 mA (MAX.)
- On-State Current : 250 mA (MAX.)
- On-State Resistance : 3 Ω (MAX.), 2 Ω (TYP.)
- Output Capacitance : 7 pF (MAX.), 5 pF (TYP.)
- Isolation Voltage : 1500 Vrms (MIN.)

PIN CONFIGURATION (TOP VIEW)

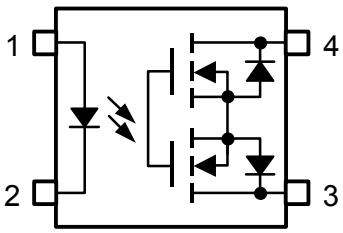

1 : ANODE
2 : CATHODE
3 : DRAIN
4 : DRAIN

MAXIMUM RATINGS (Ta = 25°C)

CHARACTERISTIC		SYMBOL	RATING	UNIT
LED	Forward Current	I_F	50	mA
	Forward Current Derating (Ta ≧ 25°C)	ΔI_F/°C	−0.5	mA/°C
	Reverse Voltage	V_R	5	V
	Junction Temperature	T_j	125	°C
DETECTOR	Off-State Output Terminal Voltage	V_{OFF}	40	V
	On-State Current	I_{ON}	250	mA
	On-State Current Derating (Ta ≧ 25°C)	ΔI_{ON}/°C	−2.5	mA/°C
	Junction Temperature	T_j	125	°C
Storage Temperature Range		T_{stg}	−40~125	°C
Operating Temperature Range		T_{opr}	−20~85	°C
Lead Soldering Temperature (10 s)		T_{sol}	260	°C
Isolation Voltage (AC, 1 minute, R.H. ≦ 60%) (NOTE1)		BV_S	1500	Vrms

(NOTE1) : Device considered a two-terminal device : Pins 1 and, 2 shorted together, and pins 3 and 4 shorted together.

Caution

This device is sensitive to electrostatic discharge. When using this device, please ensure that all tools and equipment are earthed.

This device is applying super small package which is free for Moisture-Proof packing. However, the application of this device is premised on use under controlled environmental condition like as measuring instrument. It is necessary to take precautions of storage condition and operating environmental condition.

RECOMMENDED OPERATING CONDITIONS

CHARACTERISTIC	SYMBOL	MIN.	TYP.	MAX.	UNIT
Supply Voltage	V_{DD}	—	—	32	V
Forward Current	I_F	10	—	30	mA
On-State Current	I_{ON}	—	—	250	mA
Operating Temperature	T_{opr}	25	—	60	°C

INDIVIDUAL ELECTRICAL CHARACTERISTICS (Ta = 25°C)

CHARACTERISTIC		SYMBOL	TEST CONDITION	MIN.	TYP.	MAX.	UNIT
LED	Forward Voltage	V_F	I_F = 10 mA	1.0	1.15	1.3	V
	Reverse Current	I_R	V_R = 5 V	—	—	10	μA
	Capacitance	C_T	V = 0, f = 1 MHz	—	15	—	pF
DETECTOR	Off-State Current	I_{OFF}	V_{OFF} = 30 V, Ta = 50°C	—	—	1000	pA
	Capacitance	C_{OFF}	V = 0, f = 100 MHz, t < 1 s	—	5	7	pF

COUPLED ELECTRICAL CHARACTERISTICS (Ta = 25°C)

CHARACTERISTIC	SYMBOL	TEST CONDITION	MIN.	TYP.	MAX.	UNIT
Trigger LED Current	I_{FT}	I_{ON} = 100 mA	—	—	4	mA
Close LED Current	I_{FC}	I_{OFF} = 10 μA	0.2	0.75	—	mA
On-State Resistance	R_{ON}	I_{ON} = 250 mA, I_F = 5 mA, t < 1 s	—	2	3	Ω

ISOLATION CHARACTERISTICS (Ta = 25°C)

CHARACTERISTIC	SYMBOL	TEST CONDITION	MIN.	TYP.	MAX.	UNIT
Capacitance Input to Output	C_S	V_S = 0 V, f = 1 MHz	—	0.8	—	pF
Isolation Resistance	R_S	V_S = 500 V, R.H. ≦ 60%	5×10^{10}	10^{14}	—	Ω
Isolation Voltage	BV_S	AC, 1 minute	1500	—	—	Vrms
		AC, 1 second (in oil)	—	3000	—	
		DC, 1 minute (in oil)	—	3000	—	Vdc

SWITCHING CHARACTERISTICS (Ta = 25°C)

CHARACTERISTIC	SYMBOL	TEST CONDITION	MIN.	TYP.	MAX.	UNIT
Turn-on Time	t_{ON}	R_L = 200 Ω (NOTE 4) V_{DD} = 10 V, I_F = 5 mA	—	—	500	μs
Turn-off Time	t_{OFF}		—	—	500	

(NOTE 4) : SWITCHING TIME TEST CIRCUIT

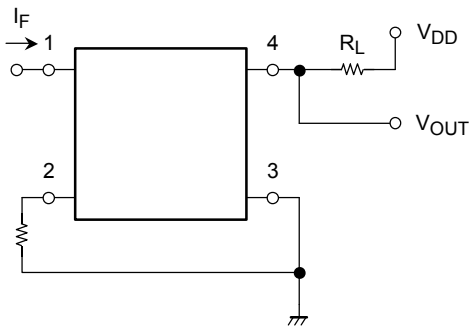

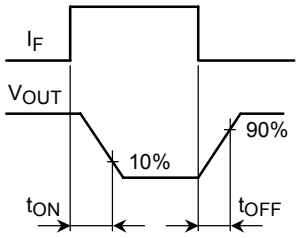

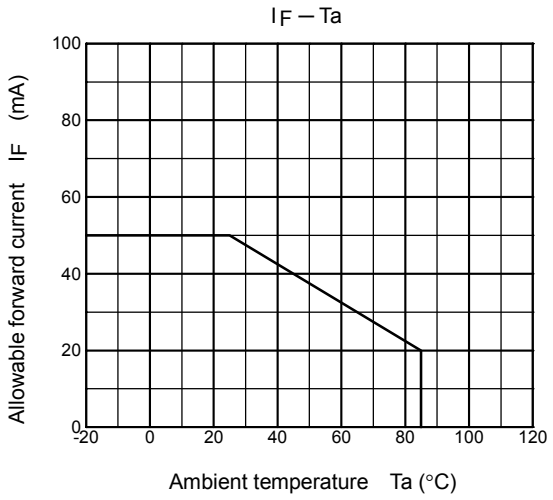
IF – Ta
Allowable forward current IF (mA)
100
80
60
40
20
0
-20
0
20
40
60
80
100
120
Ambient temperature Ta (°C)

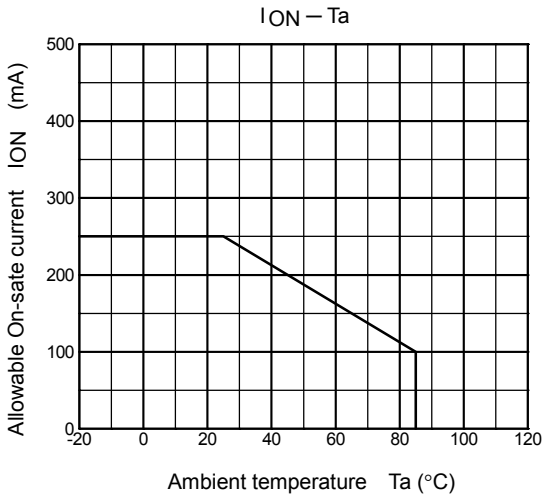
ION – Ta
Allowable On-sate current ION (mA)
500
400
300
200
100
0
-20
0
20
40
60
80
100
120
Ambient temperature Ta (°C)

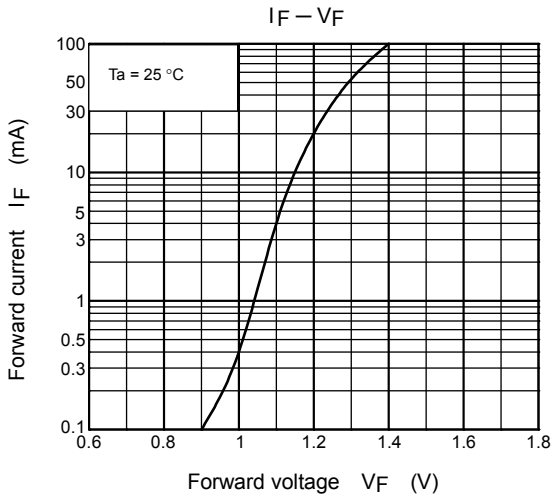
IF – VF
Ta = 25 °C
Forward current IF (mA)
100
50
30
10
5
3
1
0.5
0.3
0.1
0.6
0.8
1
1.2
1.4
1.6
1.8
Forward voltage VF (V)

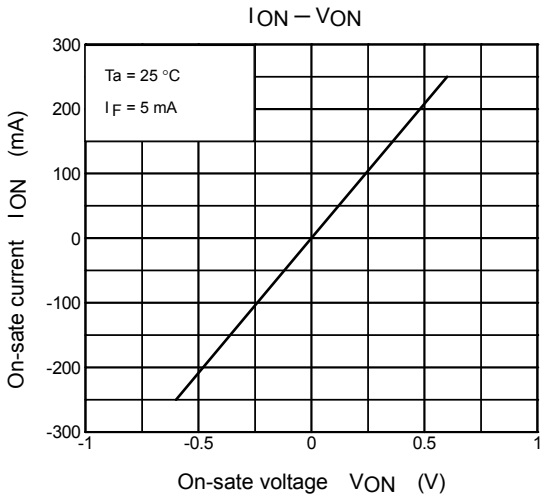
ION – VON
Ta = 25 °C
IF = 5 mA
On-sate current ION (mA)
300
200
100
0
-100
-200
-300
-1
-0.5
0
0.5
1
On-sate voltage VON (V)

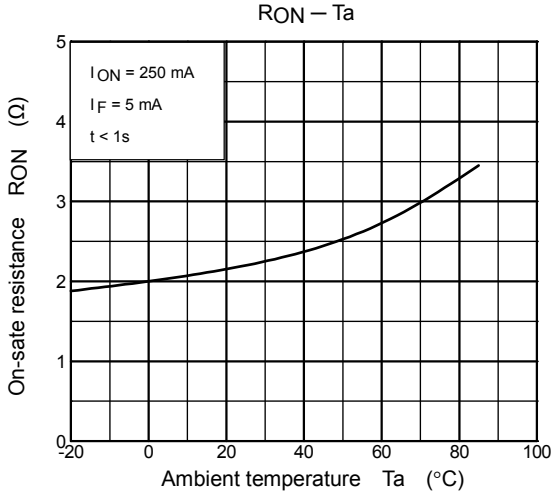
RON – Ta
ION = 250 mA
IF = 5 mA
t < 1s
On-sate resistance RON (Ω)
5
4
3
2
1
0
-20
0
20
40
60
80
100
Ambient temperature Ta (°C)

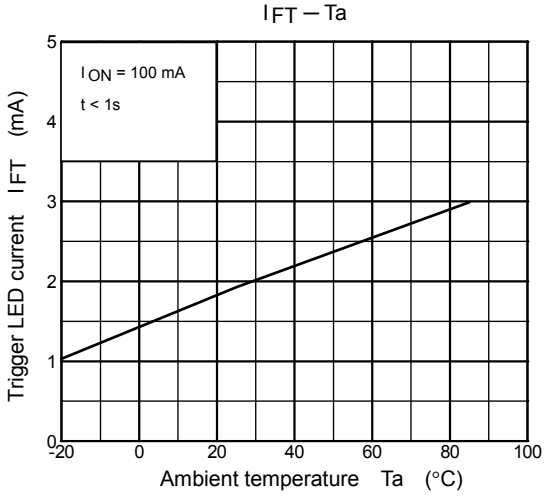
IFT – Ta
ION = 100 mA
t < 1s
Trigger LED current IFT (mA)
5
4
3
2
1
0
-20
0
20
40
60
80
100
Ambient temperature Ta (°C)

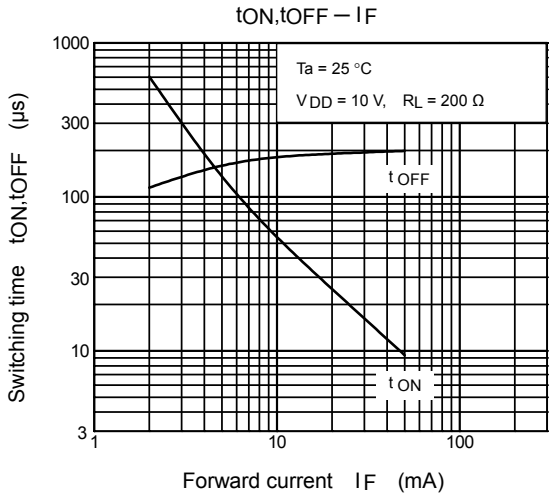
tON,tOFF – IF
Ta = 25 °C
VDD = 10 V, RL = 200 Ω
t OFF
t ON
Switching time tON,tOFF (μs)
1000
300
100
30
10
3
1
10
100
Forward current IF (mA)

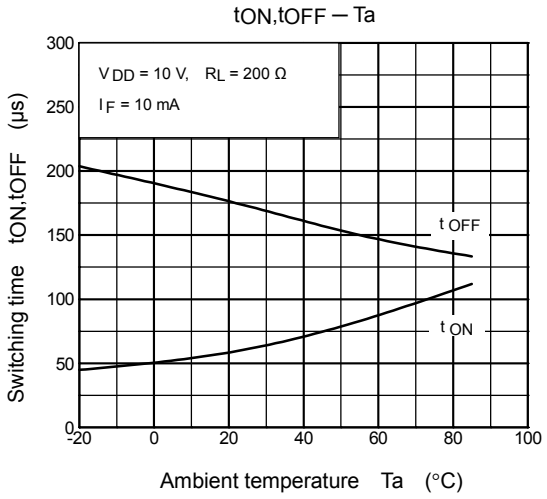
tON,tOFF – Ta
VDD = 10 V, RL = 200 Ω
IF = 10 mA
t OFF
t ON
Switching time tON,tOFF (μs)
300
250
200
150
100
50
0
-20
0
20
40
60
80
100
Ambient temperature Ta (°C)

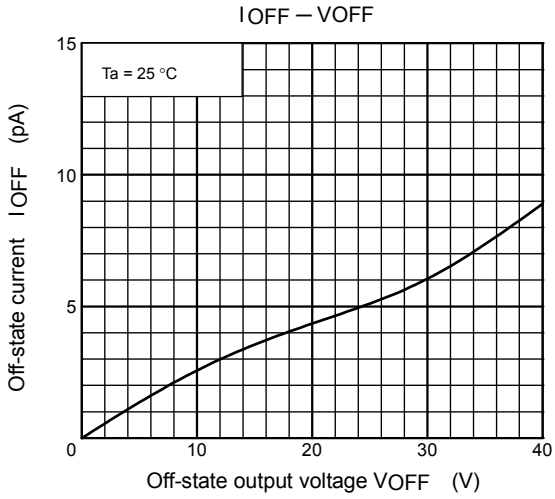
IOFF – VOFF
Ta = 25 °C
Off-state current IOFF (pA)
15
10
5
0
10
20
30
40
Off-state output voltage VOFF (V)

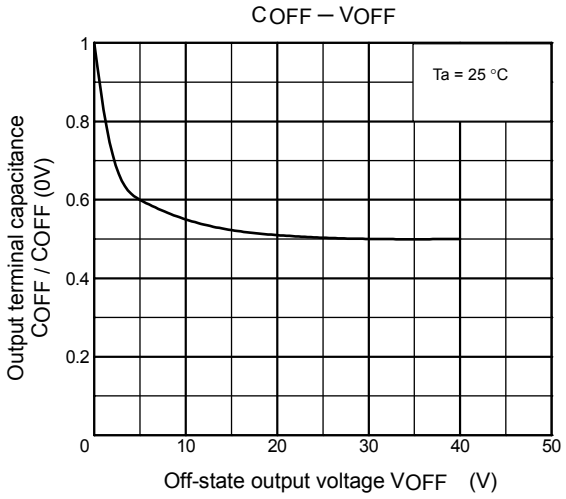
COFF – VOFF
Ta = 25 °C
Output terminal capacitance
COFF / COFF (0V)
1
0.8
0.6
0.4
0.2
0
10
20
30
40
50
Off-state output voltage VOFF (V)

OUTLINE DRAWING

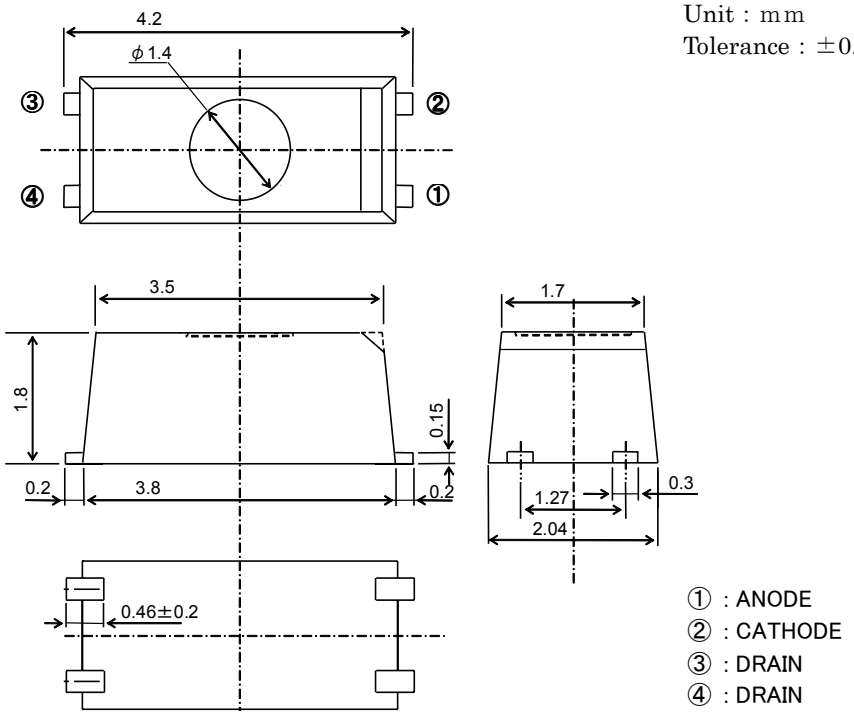

RESTRICTIONS ON PRODUCT USE

000707EBC

- TOSHIBA is continually working to improve the quality and reliability of its products. Nevertheless, semiconductor devices in general can malfunction or fail due to their inherent electrical sensitivity and vulnerability to physical stress. It is the responsibility of the buyer, when utilizing TOSHIBA products, to comply with the standards of safety in making a safe design for the entire system, and to avoid situations in which a malfunction or failure of such TOSHIBA products could cause loss of human life, bodily injury or damage to property.
  In developing your designs, please ensure that TOSHIBA products are used within specified operating ranges as set forth in the most recent TOSHIBA products specifications. Also, please keep in mind the precautions and conditions set forth in the “Handling Guide for Semiconductor Devices,” or “TOSHIBA Semiconductor Reliability Handbook” etc..
- The TOSHIBA products listed in this document are intended for usage in general electronics applications (computer, personal equipment, office equipment, measuring equipment, industrial robotics, domestic appliances, etc.). These TOSHIBA products are neither intended nor warranted for usage in equipment that requires extraordinarily high quality and/or reliability or a malfunction or failure of which may cause loss of human life or bodily injury (“Unintended Usage”). Unintended Usage include atomic energy control instruments, airplane or spaceship instruments, transportation instruments, traffic signal instruments, combustion control instruments, medical instruments, all types of safety devices, etc.. Unintended Usage of TOSHIBA products listed in this document shall be made at the customer’s own risk.
- Gallium arsenide (GaAs) is a substance used in the products described in this document. GaAs dust and fumes are toxic. Do not break, cut or pulverize the product, or use chemicals to dissolve them. When disposing of the products, follow the appropriate regulations. Do not dispose of the products with other industrial waste or with domestic garbage.
- The products described in this document are subject to the foreign exchange and foreign trade laws.
- The information contained herein is presented only as a guide for the applications of our products. No responsibility is assumed by TOSHIBA CORPORATION for any infringements of intellectual property or other rights of the third parties which may result from its use. No license is granted by implication or otherwise under any intellectual property or other rights of TOSHIBA CORPORATION or others.
- The information contained herein is subject to change without notice.