TOSHIBA Photocoupler Photorelay

TLP4172G

Telecommunication
Measurement Equipment
Security Equipment
FA

Unit: mm

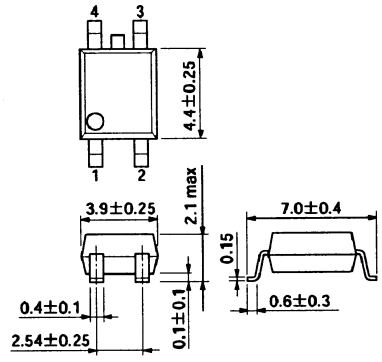

JEDEC	—
JEITA	—
TOSHIBA	11-5H1

Weight: 0.1 g (typ.)

The Toshiba TLP4172G consists of an aluminum gallium arsenide infrared emitting diode optically coupled to a photo-MOSFET in a SOP package. This 1-form-B (NC) photorelay features a withstanding voltage of 350 V.

- 4-pin SOP (2.54SOP4): Height = 2.1 mm, pitch = 2.54 mm
- Normally closed (1-form-B) device
- Peak off-state voltage: 350 V (min)
- Trigger LED current: 3 mA (max)
- On-state current: 90 mA (max)
- On-state resistance: 50 Ω (max)
- Isolation voltage: 1500 Vrms (min)

Pin Configuration (top view)

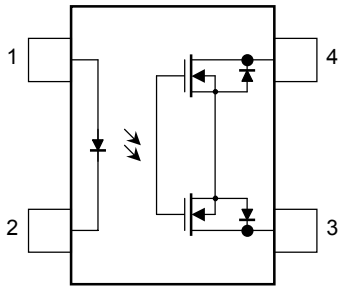

1: Anode
2: Cathode
3: Drain
4: Drain

Maximum Ratings (Ta = 25°C)

Characteristics			Symbol	Rating	Unit
LED	Forward current		I_F	50	mA
	Forward current derating (Ta ≧ 25°C)		ΔI_F/°C	−0.5	mA/°C
	Peak forward current (100 μs pulse, 100 pps)		I_{FP}	1	A
	Reverse voltage		V_R	5	V
	Junction temperature		T_j	125	°C
Detector	Off-state output terminal voltage		V_{OFF}	350	V
	On-state current	One channel operation	I_{ON}	90	mA
		Two channel operations (1a1b simultaneous operation)			
	On-state current derating (Ta ≧ 25°C)	One channel operation	ΔI_{ON}/°C	−0.9	mA/°C
		Two channel operations (1a1b simultaneous operation)			
	Junction temperature		T_j	125	°C
Storage temperature range			T_{stg}	−55 to 125	°C
Operating temperature range			T_{opr}	−40 to 85	°C
Lead soldering temperature (10 s)			T_{sol}	260	°C
Isolation voltage (AC, 1 min, R.H. ≦ 60%) (Note 1)			BV_S	1500	Vrms

Note 1: Pins 1 and 2 are shorted together, and pins 3 and 4 are shorted together.

Recommended Operating Conditions

Characteristics	Symbol	Min	Typ.	Max	Unit
Supply voltage	V_{DD}	—	—	280	V
Forward current	I_F	5	—	25	mA
On-state current	I_{ON}	—	—	90	mA
Operating temperature	T_{opr}	−20	—	65	°C

Electrical Characteristics (Ta = 25°C)

Characteristics		Symbol	Test Condition	Min	Typ.	Max	Unit
LED	Forward voltage	V_F	I_F = 10 mA	1.0	1.15	1.3	V
	Reverse current	I_R	V_R = 5 V	—	—	10	μA
	Capacitance	C_T	V = 0, f = 1 MHz	—	30	—	pF
Detector	Off-state current	I_{OFF}	V_{OFF} = 350 V, I_F = 5 mA	—	—	1	μA
	Capacitance	C_{OFF}	V = 0, f = 1 MHz, I_F = 5 mA	—	30	—	pF

Coupled Electrical Characteristics (Ta = 25°C)

Characteristics	Symbol	Test Condition	Min	Typ.	Max	Unit
Trigger LED current	I_{FC}	I_{OFF} = 10 μA	—	1	3	mA
Return LED current	I_{FT}	I_{ON} = 90 mA	0.1	—	—	mA
On-state resistance	R_{ON}	I_{ON} = 90 mA	—	30	50	Ω

Isolation Characteristics (Ta = 25°C)

Characteristics	Symbol	Test Condition	Min	Typ.	Max	Unit
Capacitance input to output	C_S	$V_S = 0$, f = 1 MHz	—	0.8	—	pF
Isolation resistance	R_S	$V_S = 500$ V, R.H. ≦ 60%	5×10^{10}	10^{14}	—	Ω
Isolation voltage	BV_S	AC, 1 min	1500	—	—	Vrms
		AC, 1 s, in oil	—	3000	—	Vrms
		DC, 1 min, in oil	—	3000	—	Vdc

Switching Characteristics (Ta = 25°C)

Characteristics	Symbol	Test Condition	Min	Typ.	Max	Unit
Turn-on time	t_{ON}	$R_L = 200\ \Omega$ $V_{DD} = 20$ V, $I_F = 5$ mA (Note 2)	—	0.25	0.5	ms
Turn-off time	t_{OFF}		—	0.5	1	ms

Note 2: Switching time test circuit

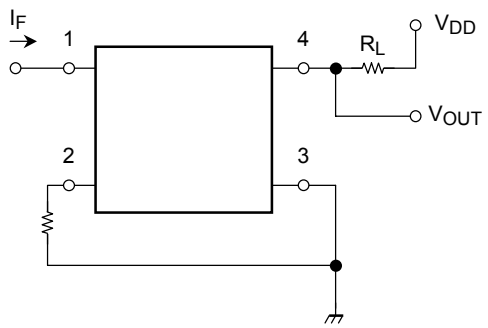

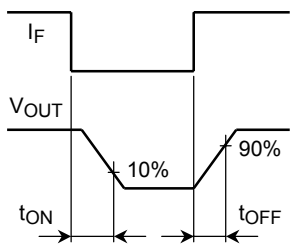

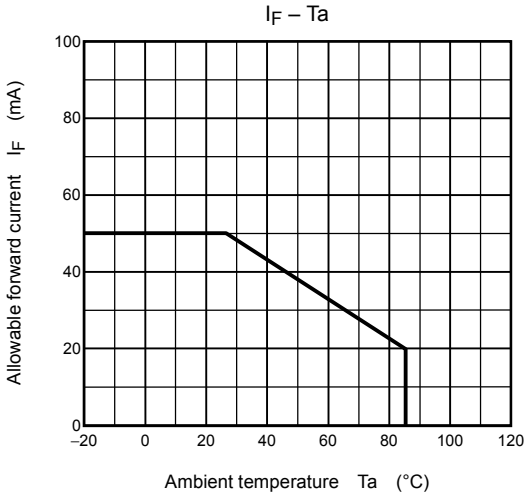
I_F – Ta
Allowable forward current I_F (mA)
100
80
60
40
20
0
–20
0
20
40
60
80
100
120
Ambient temperature Ta (°C)

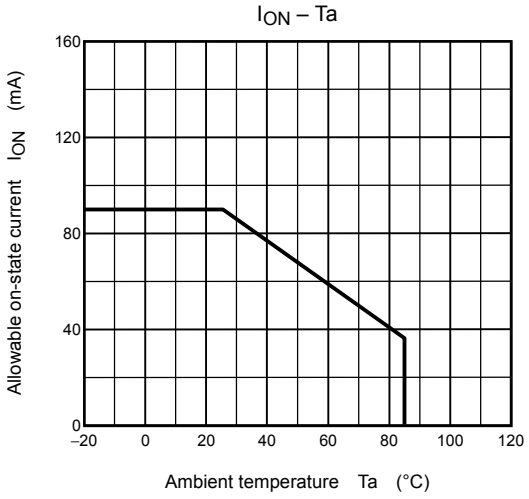
I_{ON} – Ta
Allowable on-state current I_{ON} (mA)
160
120
80
40
0
–20
0
20
40
60
80
100
120
Ambient temperature Ta (°C)

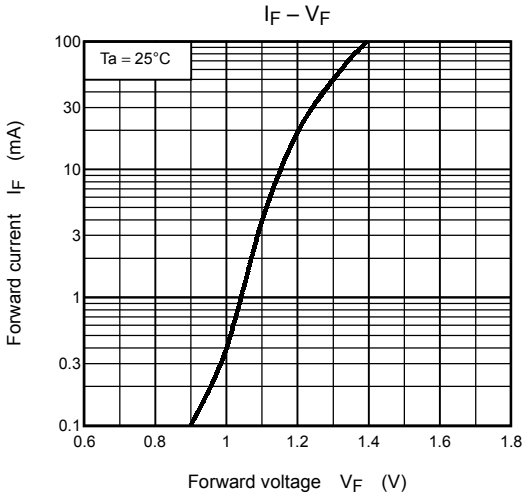
I_F – V_F
Ta = 25°C
Forward current I_F (mA)
100
30
10
3
1
0.3
0.1
0.6
0.8
1
1.2
1.4
1.6
1.8
Forward voltage V_F (V)

R_{ON} – Ta

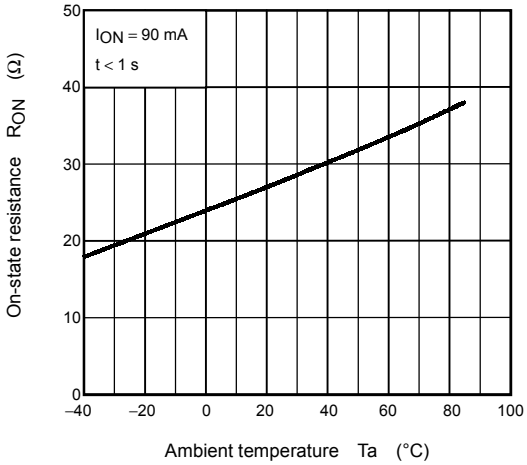

I_{FC} – Ta

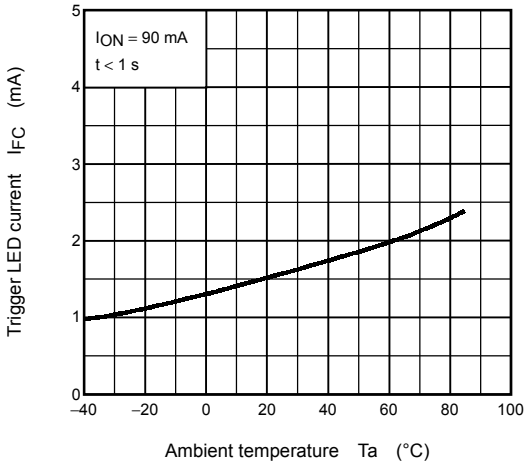

I_{OFF} – Ta

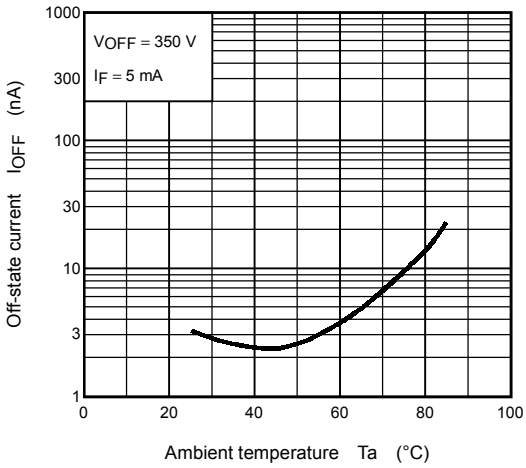

I_{ON} – V_{ON}

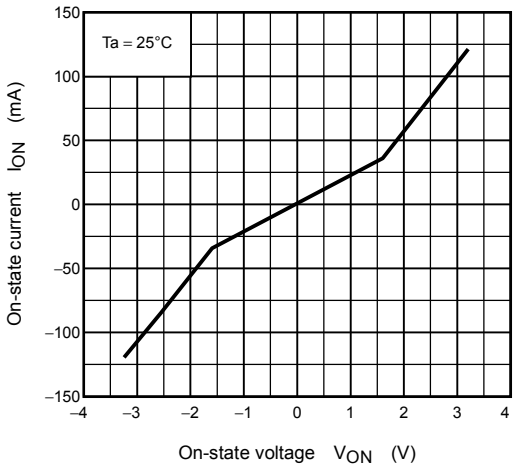

t_{ON}, t_{OFF} – I_F

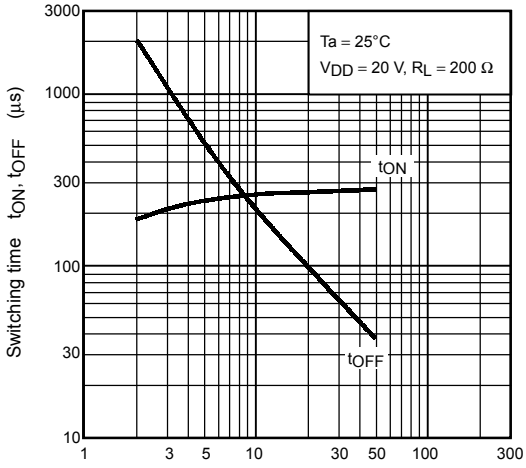

t_{ON}, t_{OFF} – Ta

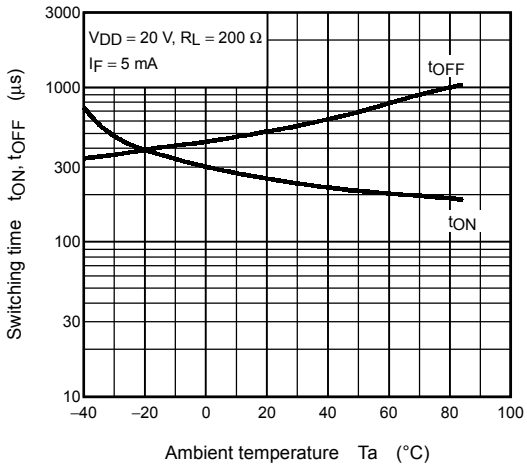

RESTRICTIONS ON PRODUCT USE

020704EBC

- TOSHIBA is continually working to improve the quality and reliability of its products. Nevertheless, semiconductor devices in general can malfunction or fail due to their inherent electrical sensitivity and vulnerability to physical stress. It is the responsibility of the buyer, when utilizing TOSHIBA products, to comply with the standards of safety in making a safe design for the entire system, and to avoid situations in which a malfunction or failure of such TOSHIBA products could cause loss of human life, bodily injury or damage to property.
  In developing your designs, please ensure that TOSHIBA products are used within specified operating ranges as set forth in the most recent TOSHIBA products specifications. Also, please keep in mind the precautions and conditions set forth in the “Handling Guide for Semiconductor Devices,” or “TOSHIBA Semiconductor Reliability Handbook” etc..
- The TOSHIBA products listed in this document are intended for usage in general electronics applications (computer, personal equipment, office equipment, measuring equipment, industrial robotics, domestic appliances, etc.). These TOSHIBA products are neither intended nor warranted for usage in equipment that requires extraordinarily high quality and/or reliability or a malfunction or failure of which may cause loss of human life or bodily injury (“Unintended Usage”). Unintended Usage include atomic energy control instruments, airplane or spaceship instruments, transportation instruments, traffic signal instruments, combustion control instruments, medical instruments, all types of safety devices, etc.. Unintended Usage of TOSHIBA products listed in this document shall be made at the customer’s own risk.
- Gallium (GaAs) Arsenide is a substance used in the products described in this document. GaAs dust or vapor is harmful to the human body. Do not break, cut, crushu or dissolve chemically.
- The products described in this document are subject to the foreign exchange and foreign trade laws.
- The information contained herein is presented only as a guide for the applications of our products. No responsibility is assumed by TOSHIBA CORPORATION for any infringements of intellectual property or other rights of the third parties which may result from its use. No license is granted by implication or otherwise under any intellectual property or other rights of TOSHIBA CORPORATION or others.
- The information contained herein is subject to change without notice.