TENTATIVE

TOSHIBA Photocoupler Photo Relay

TLP598AA

Telecommunication
Data Acquisition
Measurement Instrumentation
Power line control

Unit in mm

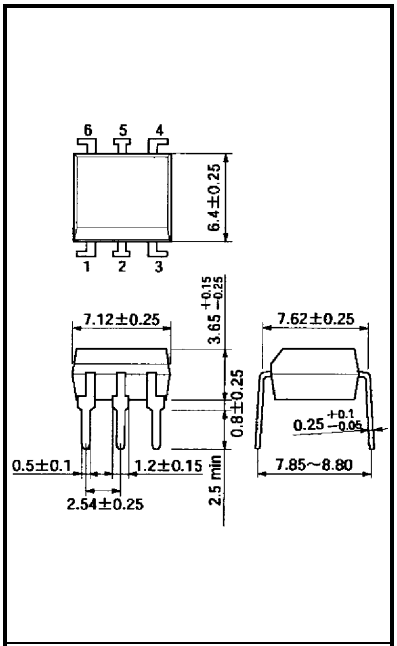

TOSHIBA 11−7A8

Weight: 0.4 g

The TOSHIBA TLP598AA consists of an aluminum gallium arsenide infrared emitting diode optically coupled to a photo−MOS FET in a six lead plastic DIP package (DIP6).
The TLP598AA is a bi-directional switch which can replace mechanical relays in many applications. And its high on-state current maximum rating is suitable to control a power line.

- Peak off−state voltage: 60 V (min.)
- On−state current: 500 mA (max.) (A connection)
- On−state resistance: 2 Ω (max.) (A connection)
- Isolation voltage: 2500 Vrms (min.) (A connection)

Pin Configuration (top view)

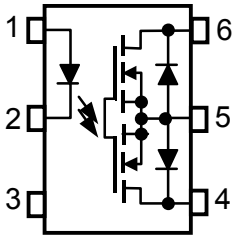

1. : ANODE
2. : CATHODE
3. : NC
4. : DRAIN D1
5. : SOURCE
6. : DRAIN D2

Schematic

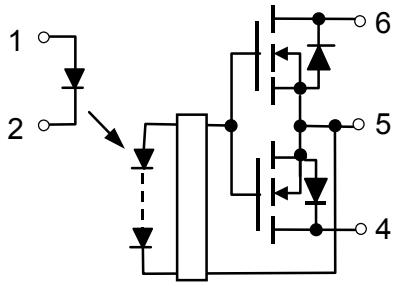

Maximum Ratings (Ta = 25°C)

Characteristic			Symbol	Rating	Unit
LED	Forward current		I_F	30	mA
	Forward current derating (Ta ≥ 25°C)		ΔI_F / °C	−0.3	mA / °C
	Peak forward current (100 μs pulse, 100 pps)		I_{FP}	1	A
	Reverse voltage		V_R	5	V
	Junction temperature		T_j	125	°C
Detector	Off−state output terminal voltage		V_{OFF}	60	V
	On−state RMS current	A connection	I_{ON}	500	mA
		B connection		500	
		C connection		1000	
	On−state current derating (Ta ≥ 25°C)	A connection	ΔI_{ON} / °C	−5.0	mA / °C
		B connection		−5.0	
		C connection		−10.0	
	Junction temperature		T_j	125	°C
Storage temperature range			T_{stg}	−55~125	°C
Operating temperature range			T_{opr}	−40~85	°C
Lead soldering temperature (10 s)			T_{sol}	260	°C
Isolation voltage (AC, 1 min., R.H. ≤ 60%) (Note 2)			BV_S	2500	Vrms

(Note 2): Device considered a two−terminal device: Pins 1, 2 and 3 shorted together, and pins 4, 5 and 6 shorted together.

Recommended Operating Conditions

Characteristic	Symbol	Min.	Typ.	Max.	Unit
Supply voltage	V_{DD}	—	—	48	V
Forward current	I_F	5	7.5	20	mA
On−state current (A connection)	I_{ON}	—	—	400	mA
Operating temperature	T_{opr}	−20	—	80	°C

Circuit Connections

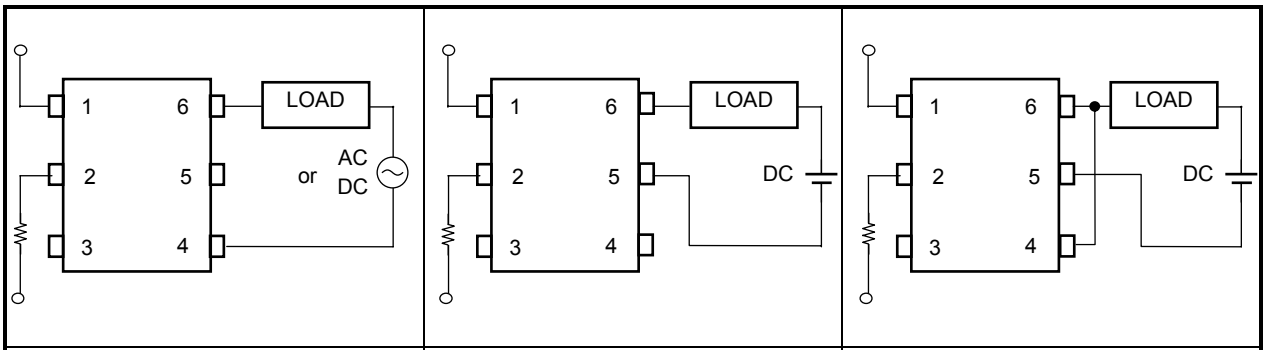

A connection | B connection | C connection

Individual Electrical Characteristics (Ta = 25°C)

Characteristic		Symbol	Test Condition	Min.	Typ.	Max.	Unit
LED	Forward voltage	V_F	I_F = 10 mA	1.18	1.33	1.48	V
	Reverse current	I_R	V_R = 5 V	—	—	10	μA
	Capacitance	C_T	V = 0, f = 1 MHz	—	30	—	pF
Detector	Off–state current	I_{OFF}	V_{OFF} = 60 V	—	—	1	μA
	Capacitance	C_{OFF}	V = 0, f = 1 MHz	—	130	—	pF

Coupled Electrical Characteristics (Ta = 25°C)

Characteristic		Symbol	Test Condition	Min.	Typ.	Max.	Unit
Trigger LED current		I_{FT}	I_{ON} = 500 mA	—	1	3	mA
On–state resistance	A connection	R_{ON}	I_{ON} = 500 mA, I_F = 5 mA	—	1	2	Ω
	B connection		I_{ON} = 500 mA, I_F = 5 mA	—	0.5	1	
	C connection		I_{ON} = 1000 mA, I_F = 5 mA	—	0.25	0.5	

Isolation Characteristics (Ta = 25°C)

Characteristic	Symbol	Test Condition	Min.	Typ.	Max.	Unit
Capacitance input to output	C_S	V_S = 0, f = 1 MHz	—	0.8	—	pF
Isolation resistance	R_S	V_S = 500 V, R.H. ≤ 60%	5×10^{10}	10^{14}	—	Ω
Isolation voltage	BV_S	AC, 1 minute	2500	—	—	Vrms
		AC, 1 second (in oil)	—	5000	—	
		DC, 1 minute (in oil)	—	5000	—	V_{DC}

Switching Characteristics (Ta = 25°C)

Characteristic	Symbol	Test Condition	Min.	Typ.	Max.	Unit
Turn–on time	t_{ON}	V_{DD} = 20 V, R_L = 200 Ω, I_F = 5 mA (Note 3)	—	0.2	0.5	ms
Turn–off time	t_{OFF}		—	0.2	0.5	

(Note 3): Switching time test circuit

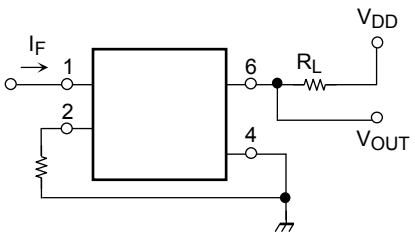

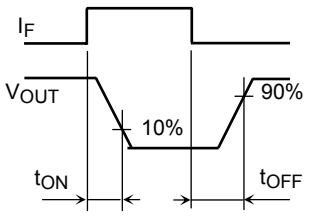

$I_F - T_a$

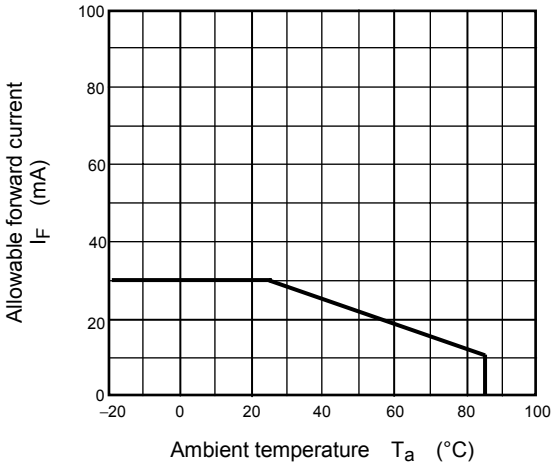

$P_C - T_a$

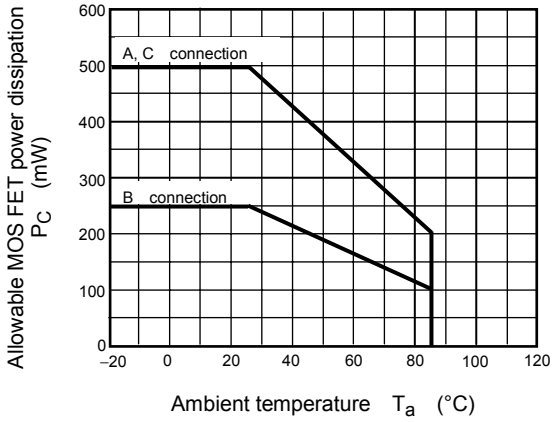

$I_F - V_F$

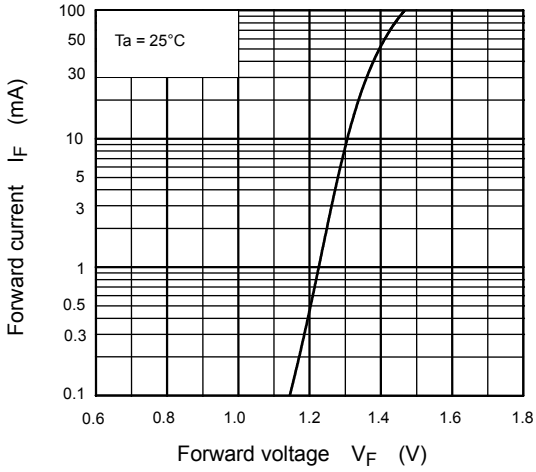

$I_{ON(RMS)} - Ta$

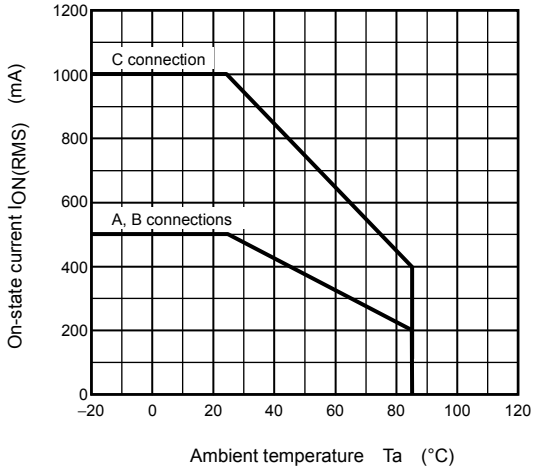

$I_{FP} - D_R$

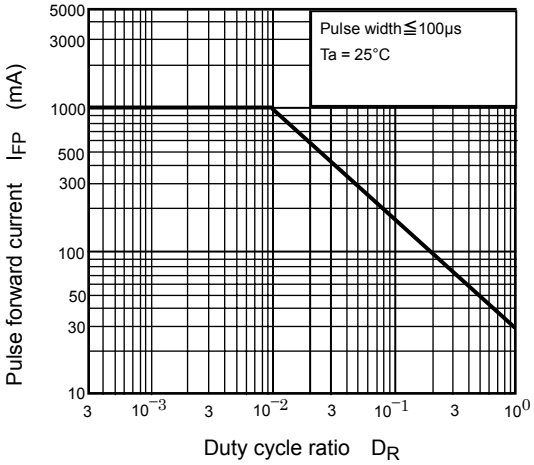

RESTRICTIONS ON PRODUCT USE

030619EBC

- The information contained herein is subject to change without notice.
- The information contained herein is presented only as a guide for the applications of our products. No responsibility is assumed by TOSHIBA for any infringements of patents or other rights of the third parties which may result from its use. No license is granted by implication or otherwise under any patent or patent rights of TOSHIBA or others.
- TOSHIBA is continually working to improve the quality and reliability of its products. Nevertheless, semiconductor devices in general can malfunction or fail due to their inherent electrical sensitivity and vulnerability to physical stress. It is the responsibility of the buyer, when utilizing TOSHIBA products, to comply with the standards of safety in making a safe design for the entire system, and to avoid situations in which a malfunction or failure of such TOSHIBA products could cause loss of human life, bodily injury or damage to property.
  In developing your designs, please ensure that TOSHIBA products are used within specified operating ranges as set forth in the most recent TOSHIBA products specifications. Also, please keep in mind the precautions and conditions set forth in the “Handling Guide for Semiconductor Devices,” or “TOSHIBA Semiconductor Reliability Handbook” etc..
- The TOSHIBA products listed in this document are intended for usage in general electronics applications (computer, personal equipment, office equipment, measuring equipment, industrial robotics, domestic appliances, etc.). These TOSHIBA products are neither intended nor warranted for usage in equipment that requires extraordinarily high quality and/or reliability or a malfunction or failure of which may cause loss of human life or bodily injury (“Unintended Usage”). Unintended Usage include atomic energy control instruments, airplane or spaceship instruments, transportation instruments, traffic signal instruments, combustion control instruments, medical instruments, all types of safety devices, etc.. Unintended Usage of TOSHIBA products listed in this document shall be made at the customer’s own risk.
- The products described in this document are subject to the foreign exchange and foreign trade laws.
- TOSHIBA products should not be embedded to the downstream products which are prohibited to be produced and sold, under any law and regulations.
- GaAs(Gallium Arsenide) is used in this product. The dust or vapor is harmful to the human body. Do not break, cut, crush or dissolve chemically.