TOSHIBA LED DOTMATRIX MODULE

TLMM527A1U

1. FEATURES

- Thin-size and light weight
- High-speed operation-30MHz
- Superior radiation characteristics
- Display function equivalent to CRT of a personal computer with a simple interface
- Brightness intensity controllerable for each color by switches

2. APPLICATIONS

- Departure / arrival schedules in stations and air ports
- Various display boards used in public facilities such as hospitals, hotels, schools, and wedding reception halls
- Event information board in department stores, etc.
- Various message boards in factories and office
- Various numeric information boards in stockbroking firms, etc.
- Information display board for inside and outside of trains

3. ORGANIZATION

ITEM	SUBSTANCE	ITEM		SUBSTANCE
Color	RED, GREEN, AMBER	Weight (Typ.)		180g
Dot Size	ϕ3mm	Current Consumption (V_{CC}=5V)	Logic	0.3A
Dot Pitch	4mm		LED	3.4A *
Number of Dots	576	Using LED Lamp		—

* All LEDs light.

4. MAXIMUM RATINGS (Ta = 25°C)

ITEM	SYMBOL	CONDITION	UNIT
Supply Voltage	V_{CC1}	7	V
	V_{CC2}	5.25	
Clock Frequency	f	30	MHz
Input Voltage	V_{IN}	$-0.3 \sim V_{CC1}+0.3$	V
Operating Temperature	T_{opr}	$-10 \sim 60$	°C
Storage Temperature	T_{stg}	$-20 \sim 85$	°C

961001EAC2

- TOSHIBA is continually working to improve the quality and the reliability of its products. Nevertheless, semiconductor devices in general can malfunction or fail due to their inherent electrical sensitivity and vulnerability to physical stress. It is the responsibility of the buyer, when utilizing TOSHIBA products, to observe standards of safety, and to avoid situations in which a malfunction or failure of a TOSHIBA product could cause loss of human life, bodily injury or damage to property. In developing your designs, please ensure that TOSHIBA products are used within specified operating ranges as set forth in the most recent products specifications. Also, please keep in mind the precautions and conditions set forth in the TOSHIBA Semiconductor Reliability Handbook.
- Gallium arsenide (GaAs) is a substance used in the products described in this document. GaAs dust and fumes are toxic. Do not break, cut or pulverize the product, or use chemicals to dissolve them. When disposing of the products, follow the appropriate regulations. Do not dispose of the products with other industrial waste or with domestic garbage.
- The information contained herein is presented only as a guide for the applications of our products. No responsibility is assumed by TOSHIBA CORPORATION for any infringements of intellectual property or other rights of the third parties which may result from its use. No license is granted by implication or otherwise under any intellectual property or other rights of TOSHIBA CORPORATION or others.
- The information contained herein is subject to change without notice.

5. BRIGHTNESS (INITIAL)

COLOR	VALUE
RED	$180 \pm 27 cd/m^2$
GREEN	$180 \pm 27 cd/m^2$

(Refer to 11.)

6. RECOMMENDABLE OPERATING CONDITION

ITEM	SYMBOL	CONDITION	UNIT
Supply Voltage	V_{CC1}	$5 \pm 5\%$	V
	V_{CC2}	5	
Operating Temperature	T_{opr}	0~50	°C

7. INPUT LEVEL

ITEM	SYMBOL	MIX.	TYP.	MAX.	UNIT
"L" Level Input	V_{IL}	—	—	0.8	V
"H" Level Input	V_{IH}	2.2	—	—	

* All the inputs are pulled up by the resistance of 100kΩ.

8. BLOCK DIAGRAM

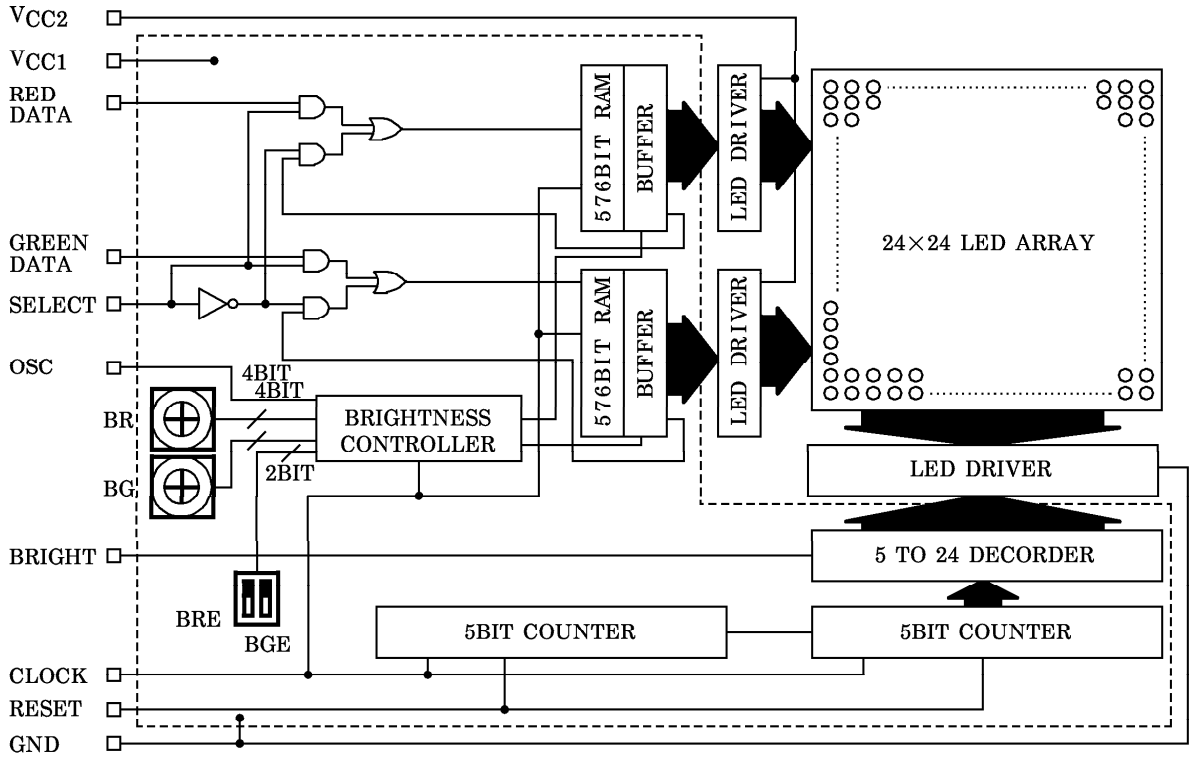

9. OPERATION

- V_{CC1} : Power supply for Logic.
- V_{CC2} : Power supply for the LEDS.
- GND : Ground.
- RED DATA : Red data with the clock signal.
- GREEN DATA : Green data with the clock signal.
- SELECT : Signal to select the data for display.
  "H" : Display off.
  "L" : Display on.
- BRIGHT : Signal to select display on / off.
  "H" : Display off
  "L" : Display on
- CLOCK : Clock signal for data input andcolumn scanning.
- RESET : Signal to initialize for lighting position (column).
- OSC : Signal to use brightness control.

10. TIMING CHART

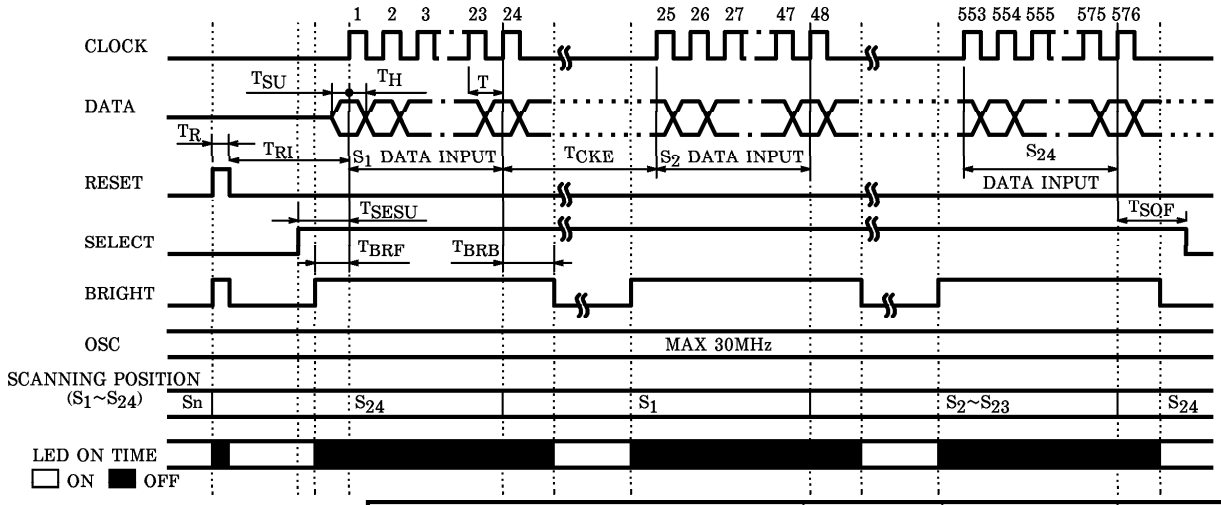

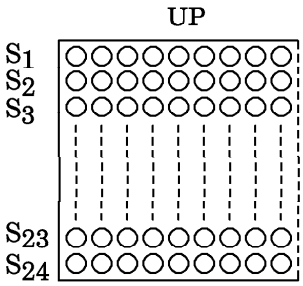

ITEM	SYMBOL	MIN. (ns)	MAX. (ns)
Clock Frequency (Dr=1/2)	T	33.3 (30MHz)	—
Data Set Up Time	T_{SU}	10	—
Data Hold Time	T_H	20	—
Clock Enable Time	T_{CKE}	Note 1	—
Reset Set Up Time	T_{RI}	10	—
Reset Hold Time	T_R	20	—
Select Set Up Time	T_{SESU}	10	—
Select Off Time	T_{SOF}	50	—
Bright Input Time (Front)	T_{BRF}	Note 2	—
Bright Input Time (Back)	T_{BRB}	200	—

Notes 1) The LED ON time (brightness) is determined by the time of $T_{CKE}-(T_{BRF}+T_{BRB})$ and it is recommended to normally ensure 30μs or more.

2) Determine T_{BRF} based on the following expression. Assume that $T_{BRF}=0$ when $T_{BRF}(\mu s)\leqq 0$. 16×16bots ; $T_{BRF}(\mu s)=7-15\times T$

11. SURFACE BRIGHTNESS ADJUSTMENT

Since the surface brightness of red and green has been applied to this product at delivery, brightness differences among products are minimized when multiple products are used on one surface.
However, since the following operation conditions must be satisfied in order to fully utilize the surface brightness adjustment function, the conditions must be taken into account at circuit design.

A) Number of horizontal scanning lines : 16 lines×16=256 lines or more

Number of horizontal scanning lines from a reset signal to the nest reset signal. When the number of scanning lines does not reach 256, the surface brightness adjustment control does not function and the light may come on at the maximum brightness (or may not come on at all) according to the value set for the surface brightness adjustment switch.

B) Prohibition of changing the number of scanning lines during display operation or data write operation

If the number of scanning lines has to be changed, caution is necessary since an abnormality occurs in the surface brightness during two reset periods including the reset period at change.
Display returns to normal after these periods.

C) OSC input

The adjustment value set at delivery is based on the case in which there is not input to this terminal. For finer brightness adjustment, a pulse of 5MHz is input to this terminal at setting at delivery.
Therefore, when there is an input to this terminal, the permissible adjustment value at delivery can be reduced to a half. In this case, it is recommended to secure 500kHz for the input frequency. When no signal is input to this terminal, fix it to "H" or "L".

Note : Display two reset periods becomes abnormal immediately after power supply connection regardless of the conditions described above.

<Surface brightness Measurement conditions (Ta=25°C)>

- Input

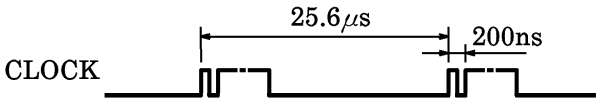

V_{CC1} : 5V
V_{CC2} : 5V
BRIGHT : "L" level
RESET : Frequency=76Hz, T_R=3.2μs

- Measure equipment and conditions

Equipment : BM-820D (TOPCON Ltd.) Respons switch is slow position.
Distance : 1500mm (from the LED surface to the light reception surface)
Timing : All the lights of a single color of red or green are lit and measurement is performed after 2 seconds.

<Surface Brightness Adjustment Switches>

SW1 (BR) :	Low-order 4 bits for red surface brightness compensation (decoding switch)
SW2 (BG) :	Low-order 4 bits for green surface brightness compensation (decoding switch)
SW3-No.2 (BRE) :	Highest bit for red surface brightness compensation
SW3-No.1 (BGE) :	Highest bit for green surface brightness compensation

*Adjustment

Using OSC input :	Brightest when SW1 and SW2 are set to "0" and SW3 is set to "OFF". SW3 "OFF" : 16-step adjustments are enabled by the decoding switches. SW3 "ON" : Further 16-step adjustments are enabled by the decoding switches.
Not using OSC input :	Brightest when SW1 and SW2 are set to "0" and SW3 is set to "OFF". SW3 "OFF" : 8-step adjustments are enabled by the decoding switches. SW3 "ON" : Further 8-step adjustments are enabled by the decoding switches.

12. PIN CONNECTIONS

<Connector>

CN1 : FCN744P-010AU / R (FUJITSU Ltd.)

CN2 : 5267-07A (MOLEX (JAPAN) Ltd.)

CN3 : 53253-0210 (MOLEX (JAPAN) Ltd.)

CN4 : 53253-0210 (MOLEX (JAPAN) Ltd.)

CN5 : 53253-0210 (MOLEX (JAPAN) Ltd.)

<Connection>

CN1

PIN No.	CONNECTION	PIN No.	CONNECTION
1	GND	6	CLOCK
2	RED DATA	7	GND
3	GND	8	BRIGHT
4	GREEN DATA	9	GND
5	GND	10	RESET

CN2

PIN No.	CONNECTION	PIN No.	CONNECTION
1	V_{CC1}	5	GND
2	V_{CC2}	6	SELECT
3	GND	7	GND
4	GND	—	—

CN3

PIN No.	CONNECTION
1	SELECT
2	GND

CN4

PIN No.	CONNECTION
1	OSC
2	GND

CN5

PIN No.	CONNECTION
1	GND
2	OSC

13. ACCESSORIES (Sold Separately)

<Power supply cable> : AC555 .... for CN2 and CN3

<OSC cable> : AC573 .... for CN4 and CN5

TYPE No. AC555

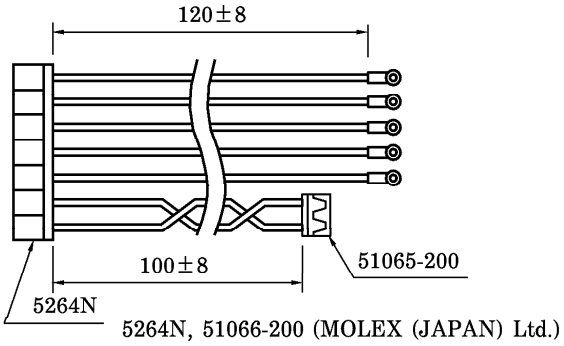

TYPE No. AC573

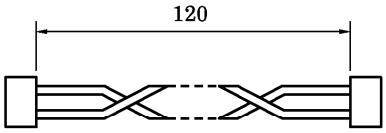

14. PRECAUTION

- When many modules are used by combining them, utmost care is necessary with regard to gradation.

  Note : Apply forced air conditioning in order to maintain the surface temperature of LED to 70°C or less. Ensure the design is such that there will be no voltage differences among modules in order to maintain operational stability.
- Do not drop the module because it may be deformed by any such large impact force.
- The reflection board can be easily scratched so do not touch it with any sharp material or hard objects.
- Since an operation error may occur due to electrical noise if the module is operated at a high frequency, use a twisted wire or a shield wire, or carry out terminating processing.
- When power is supplied to V_{CC1} without supply of power to V_{CC2} or a signal is input without supplying power to V_{CC1} or V_{CC2}, LED comes on. In this case, it is recommended to set the BRIGHT input to the "H" level forcibly. (The brightness varies according to the number of data items displayed in one module.)
  Even if this processing is not performed, there is no adverse influence on the performance of the product.
- Caution is necessary at power connection / disconnection of each device, including adjustment time, so that the CLOCK signal does not become no-input while a voltage is applied to the module. (When the CLOCK signal is in a non-input state, display scan is not performed so that DC ON may occur in LED due to the high current.)

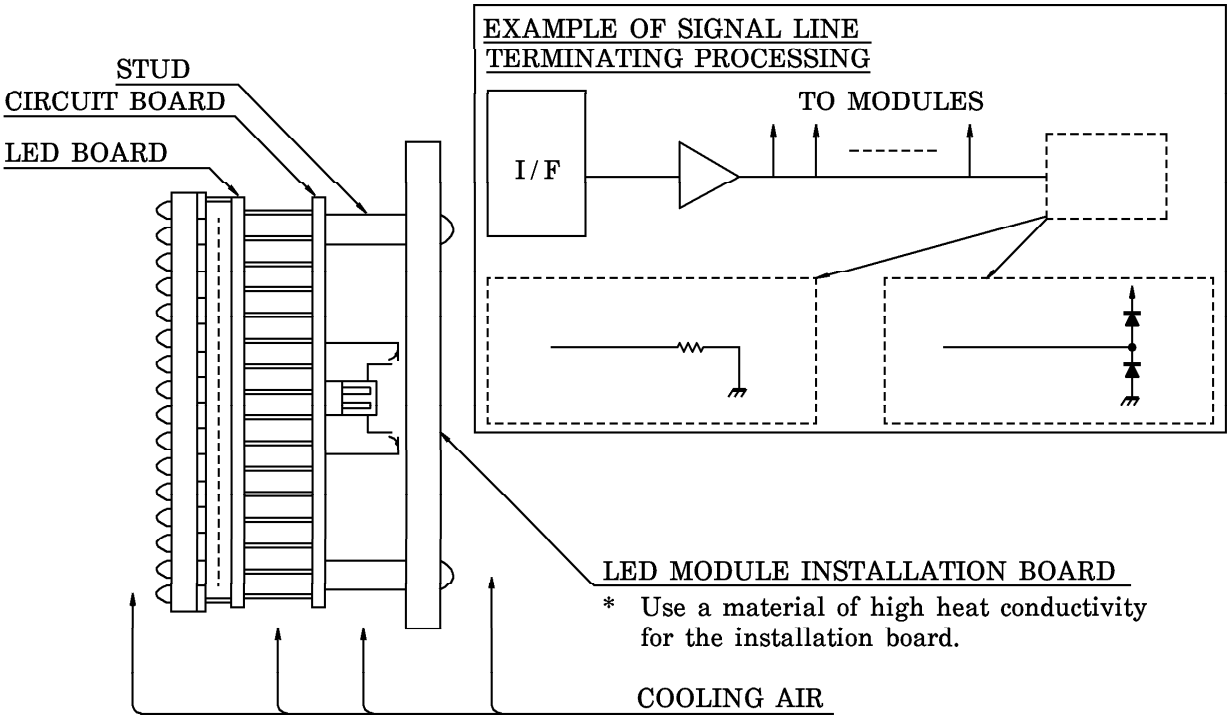

EXAMPLE FOR COOLING

15. DIMENSIONS
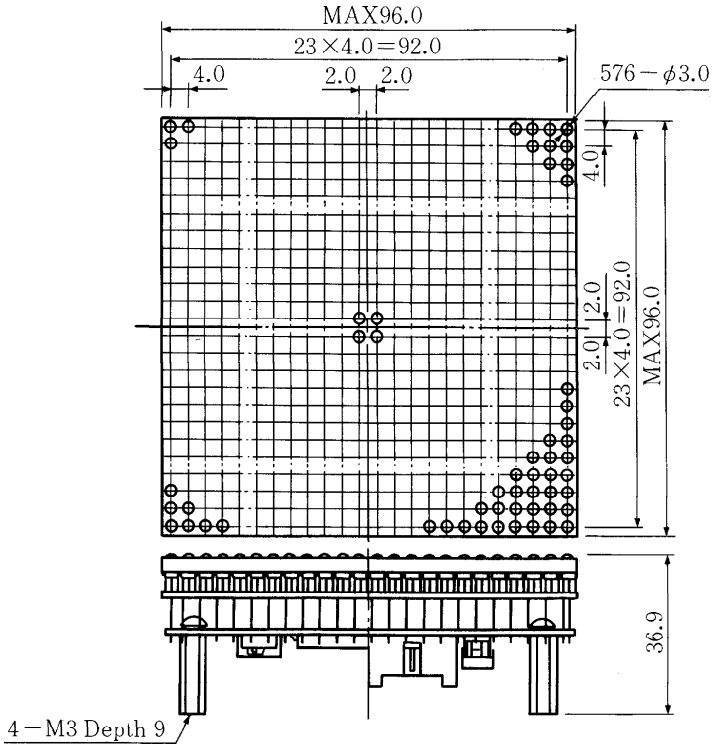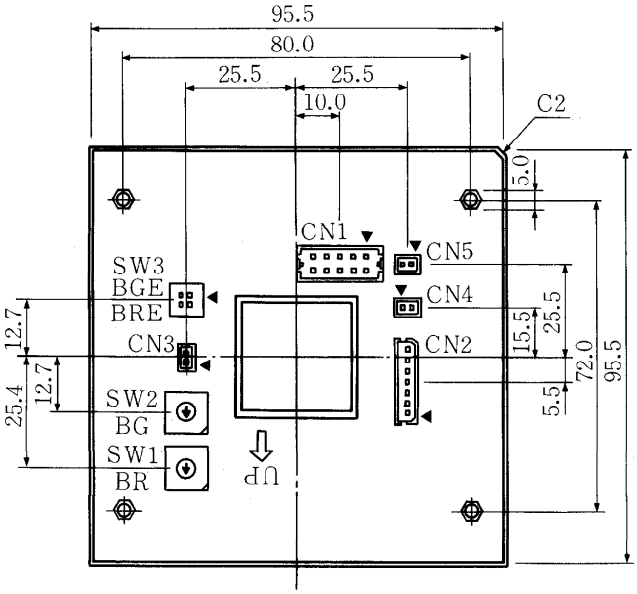
Unit in mm
Tolerance is ±0.3