Amplifier, Power, 1.2W 5.7-8.5 GHz

Features

- **1.2 Watt Saturated Output Power Level**
- **Variable Drain Voltage (4-10V) Operation**
- **MSAG™ Process**

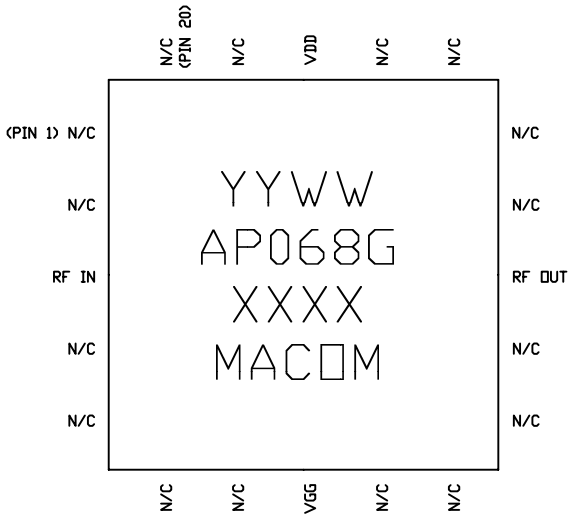

Description

The MAAP-000068-PKG003 is a 3-stage 1.2 W power amplifier with on-chip bias networks in a 20 lead, 5 mm PQFN package, allowing easy assembly. This product is fully matched to 50 ohms on both the input and output. It can be used as a power amplifier stage or as a driver stage in high power applications.

Each device is 100% RF tested to ensure performance compliance. The part is fabricated using M/A-COM's GaAs Multifunction Self-Aligned Gate (MSAG) Process.

The 5 mm PQFN package has a lead-free lead finish that is RoHS compliant and compatible with a 260°C reflow temperature. The package also features low lead inductance and an excellent thermal path. The MTTF is 1,000,000 hours at 170°C.

Primary Applications

- **Point-to-Point Radio**
  - ◊ **6, 7, and 8 GHz Bands**
- **SatCom**
- **Broadband Wireless Access**

Electrical Characteristics: T_C = 35°C[1], Z_0 = 50 Ω, V_{DD} = 8V, I_{DQ} = 320mA[2], P_{in} = 8dBm, R_G = 60Ω

Parameter	Symbol	Typical	Units
Bandwidth	f	5.7-8.5	GHz
Output Power	P_{OUT}	31	dBm
1-dB Compression Point	P1dB	30	dBm
Small Signal Gain	G	25	dB
Input VSWR	VSWR	1.6:1	
Output VSWR	VSWR	2.5:1	
Output Third Order Intercept	TOI	38	dBm
Output Third Order Intermod, P_{out} = 24 dBm (DCL)	IMD3	35	dBc
Gate Current	I_{GG}	5	mA
Drain Current	I_{DD}	470	mA

1. **T_C = Case Temperature**
2. **Adjust V_{GG} between –2.6 and –1.2V to achieve specified Idq.**

- **North America** Tel: 800.366.2266 / Fax: 978.366.2266
- **Europe** Tel: 44.1908.574.200 / Fax: 44.1908.574.300
- **Asia/Pacific** Tel: 81.44.844.8296 / Fax: 81.44.844.8298

Maximum Operating Conditions [3]

Parameter	Symbol	Absolute Maximum	Units
Input Power	P_{IN}	13.0	dBm
Drain Supply Voltage	V_{DD}	+12.0	V
Gate Supply Voltage	V_{GG}	-3.0	V
Quiescent Drain Current (No RF)	I_{DQ}	520	mA
Quiescent DC Power Dissipated (No RF)	P_{DISS}	5.2	W
Junction Temperature	T_J	170	°C
Storage Temperature	T_{STG}	-55 to +150	°C

3. Operation beyond these limits may result in permanent damage to the part.

Recommended Operating Conditions[4]

Characteristic	Symbol	Min	Typ	Max	Unit
Drain Voltage	V_{DD}	4.0	8.0	8.0	V
Gate Voltage	V_{GG}	-2.6	-2.0	-1.2	V
Input Power	P_{IN}		8.0	11.0	dBm
Thermal Resistance	Θ_{JC}		32		°C/W
Case Temperature	T_C			Note 4	°C

4. Operation outside of these ranges may reduce product reliability.
5. Case Temperature = 170°C — Θ_{JC}* V_{DD} * I_{DQ}

Operating Instructions

This device is static sensitive. Please handle with care. To operate the device, follow these steps.

1. Apply V_{GG} = -2 V, V_{DD}= 0 V.
2. Ramp V_{DD} to desired voltage, typically 8.0 V.
3. Adjust V_{GG} to set I_{DQ}, (approximately @ –2 V).
4. Set RF input.
5. Power down sequence in reverse. Turn V_{GG} off last.

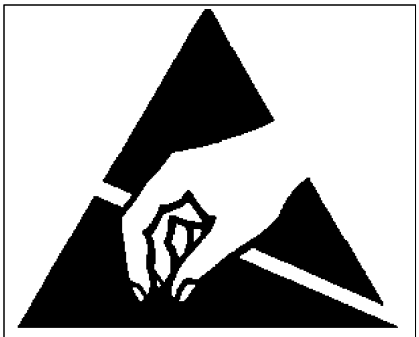

ATTENTION
Static-Sensitive Devices
Handling Precautions Required

- **North America** Tel: 800.366.2266 / Fax: 978.366.2266
- **Europe** Tel: 44.1908.574.200 / Fax: 44.1908.574.300
- **Asia/Pacific** Tel: 81.44.844.8296 / Fax: 81.44.844.8298

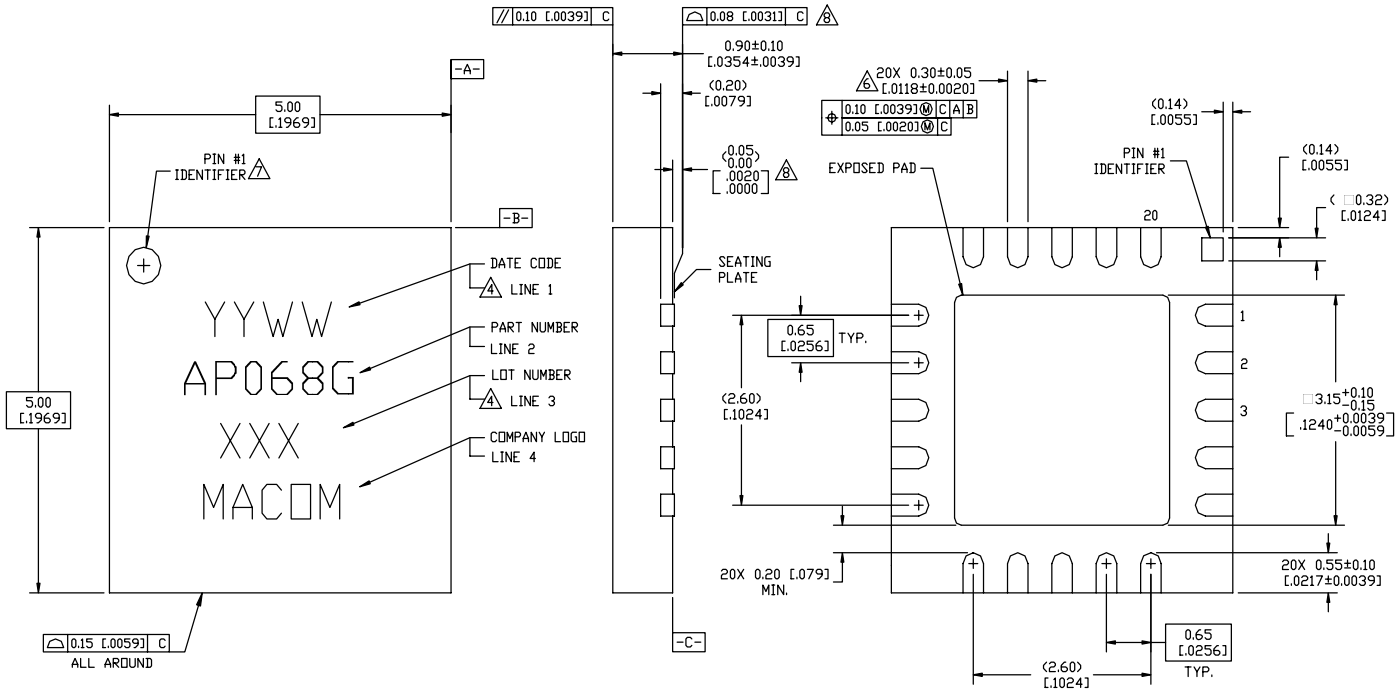

Figure 1. 5x5 mm 20-Lead MLP.

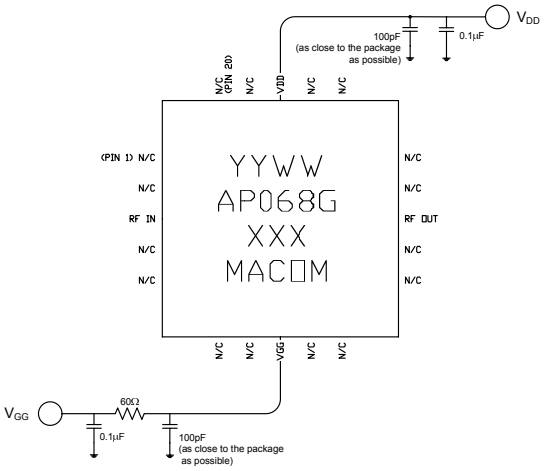

Figure 2. Recommended Bias Configuration.

Note: The exposed pad centered on the package bottom must be connected to RF and dc ground for proper electrical and thermal operation.

Refer to M/A-COM Application Note ***Surface Mounting Instructions for PQFN Packages #S2083**** for assembly guidelines.

Additional Precaution: All parts must receive a bake-out of 125ºC for 24 hours prior to any solder reflow operation.

*Application Notes can be found by going to the Site Search Page of M/A-COM's web page (http://www.macom.com/Application%20Notes/index.htm) and searching for the required Application Note.

- **North America** Tel: 800.366.2266 / Fax: 978.366.2266
- **Europe** Tel: 44.1908.574.200 / Fax: 44.1908.574.300
- **Asia/Pacific** Tel: 81.44.844.8296 / Fax: 81.44.844.8298

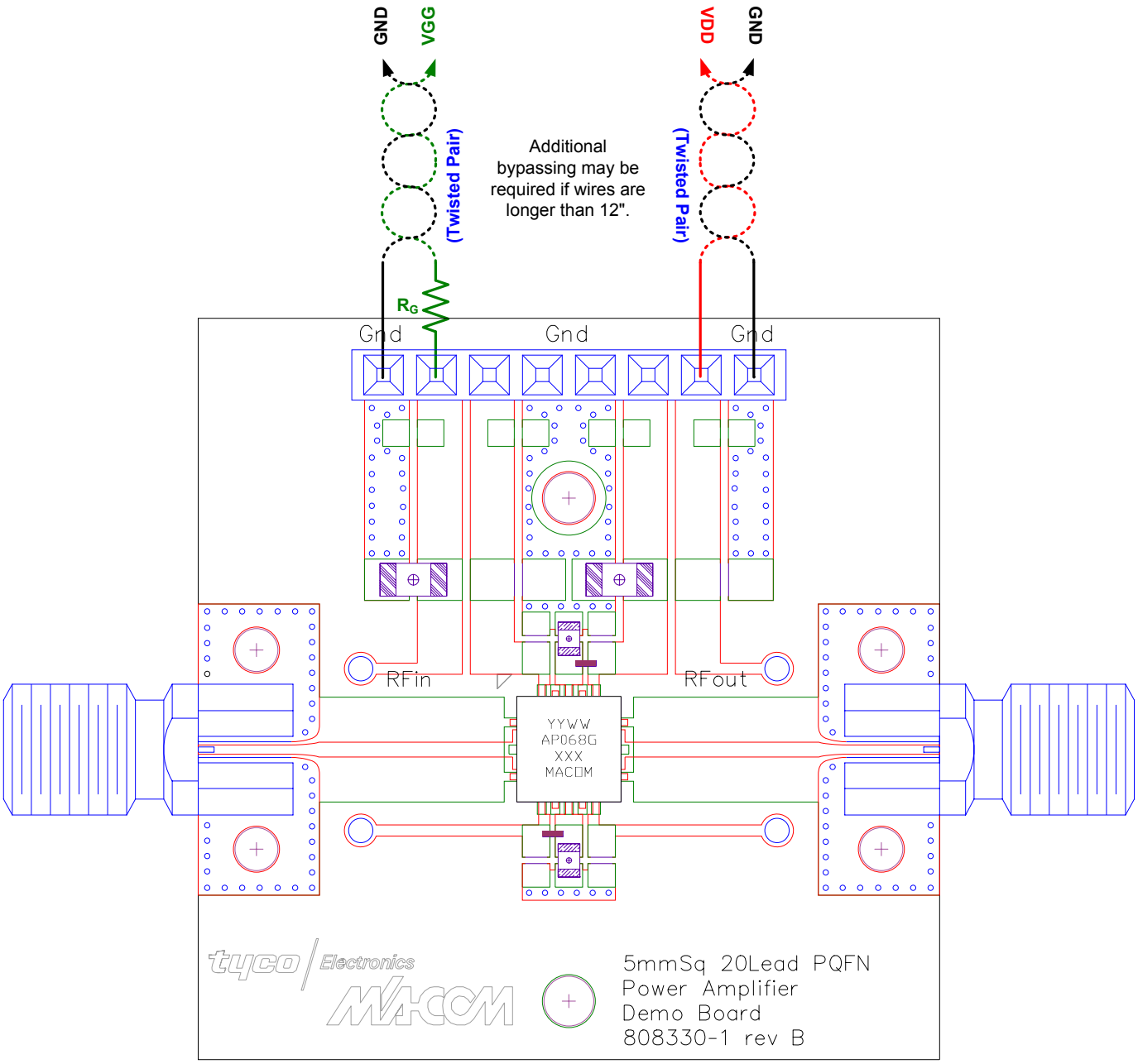

Figure 3. Demonstration Board P/N MAAP-000068-SMB003 (available upon request).

- **North America** Tel: 800.366.2266 / Fax: 978.366.2266
- **Europe** Tel: 44.1908.574.200 / Fax: 44.1908.574.300
- **Asia/Pacific** Tel: 81.44.844.8296 / Fax: 81.44.844.8298

Visit www.macom.com for additional data sheets and product information.