Radar Pulsed Power Transistor, 20W, 100µs Pulse, 10% Duty
3.1 - 3.5 GHz

PH3135-20M

V2.00

Features

- NPN Silicon Microwave Power Transistor
- Common Base Configuration
- Broadband Class C Operation
- High Efficiency Interdigitated Geometry
- Diffused Emitter Ballasting Resistors
- Gold Metalization System
- Internal Input and Output Impedance Matching
- Hermetic Metal/Ceramic Package

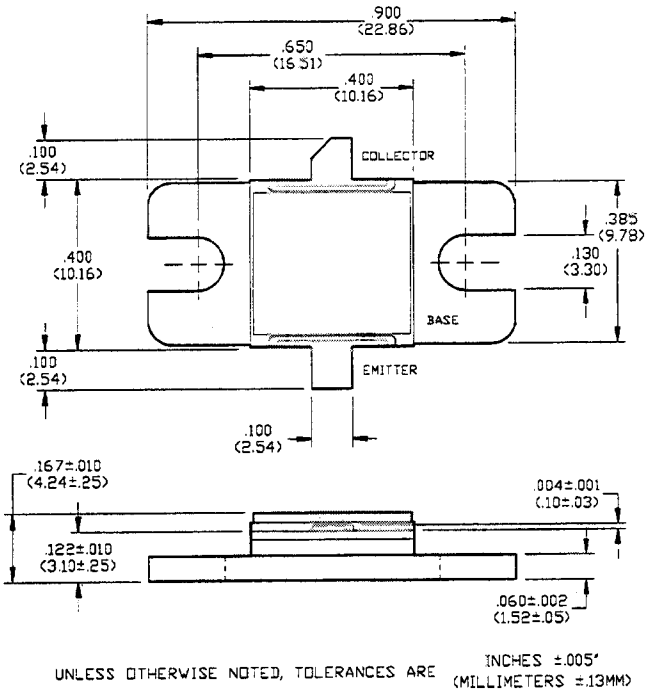

Absolute Maximum Ratings at 25°C

Parameter	Symbol	Rating	Units
Collector-Emitter Voltage	V_{CES}	65	V
Emitter-Base Voltage	V_{EBO}	3.0	V
Collector Current (Peak)	I_C	2.4	A
Total Power Dissipation	P_{TOT}	160	W
Junction Temperature	T_J	200	°C
Storage Temperature	T_{STG}	-65 to +200	°C

Electrical Characteristics at 25°C

Parameter	Symbol	Min	Max	Units	Test Conditions
Collector-Emitter Breakdown Voltage	BV_{CES}	65	-	V	I_C=10 mA
Collector-Emitter Leakage Current	I_{CES}	-	1.5	mA	V_{CE}=40 V
Thermal Resistance	$R_{TH(JC)}$	-	1.10	°C/W	V_{CC}=36 V, P_{OUT}=20 W, F=3.1, 3.3, 3.5 GHz
Input Power	P_{IN}	-	3.6	W	V_{CC}=36 V, P_{OUT}=20 W, F=3.1, 3.3, 3.5 GHz
Power Gain	G_P	7.5	-	dB	V_{CC}=36 V, P_{OUT}=20 W, F=3.1, 3.3, 3.5 GHz
Collector Efficiency	η_C	35	-	%	V_{CC}=36 V, P_{OUT}=20 W, F=3.1, 3.3, 3.5 GHz
Input Return Loss	RL	6	-	dB	V_{CC}=36 V, P_{OUT}=20 W, F=3.1, 3.3, 3.5 GHz
Load Mismatch Tolerance	VSWR-T	-	2:1	-	V_{CC}=36 V, P_{OUT}=20 W, F=3.1, 3.3, 3.5 GHz

Broadband Test Fixture Impedances

F(GHz)	$Z_{IF}(\Omega)$	$Z_{OF}(\Omega)$
3.10	16.0 + j5.5	19.0 + j3.4
3.30	14.5 + j1.6	14.2 - j2.8
3.50	11.3 + j0.0	10.7 - j3.3

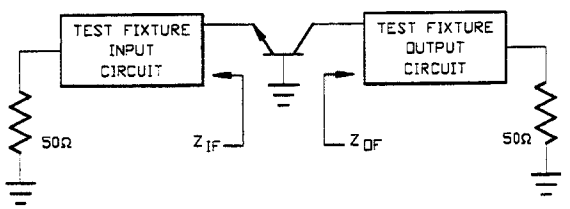

North America: Tel. (800) 366-2266 Fax (800) 618-8883 ■ Asia/Pacific: Tel. +81 (03) 3226-1671 Fax +81 (03) 3226-1451 ■ Europe: Tel. +44 (1344) 869 595 Fax +44 (1344) 300 020

RF Test Fixture

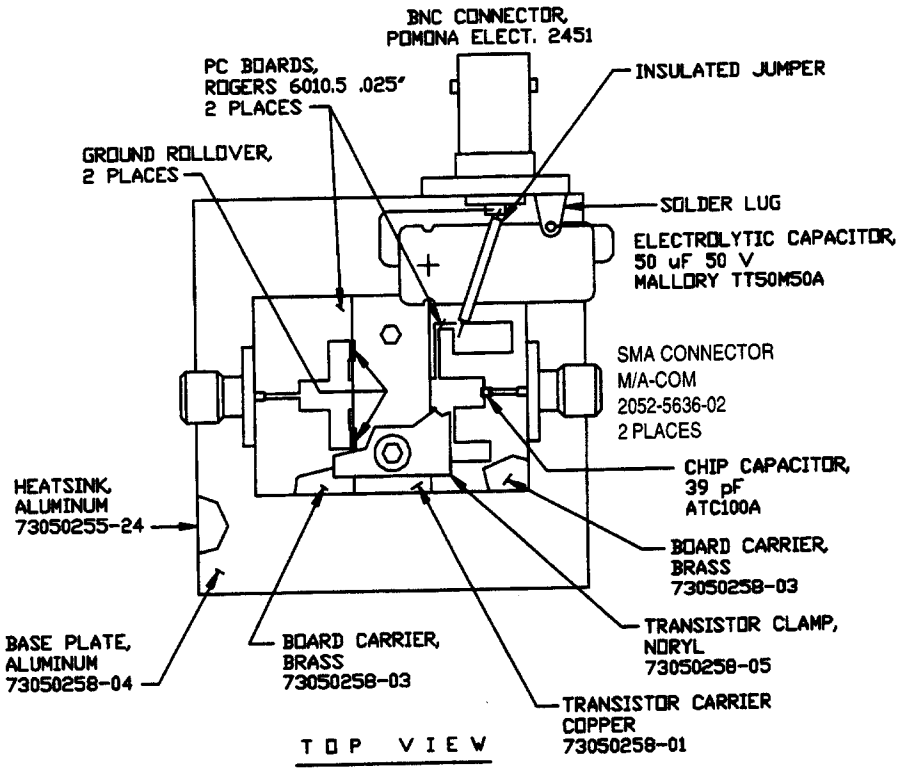

Test Fixture PC Board Dimensions

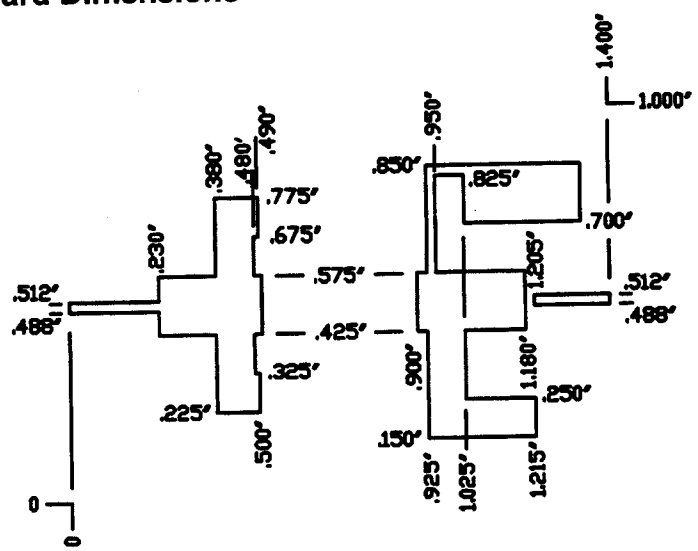

M/A-COM, Inc.

North America: Tel. (800) 366-2266 Fax (800) 618-8883 ■ Asia/Pacific: Tel. +81 (03) 3226-1671 Fax +81 (03) 3226-1451 ■ Europe: Tel. +44 (1344) 869 595 Fax +44 (1344) 300 020