MACOM
an AMP company

RF MOSFET Power Transistor, 10W, 28V 100 - 500 MHz

UF2810P

V2.00

Features

- N-Channel Enhancement Mode Device
- DMOS Structure
- Lower Capacitances for Broadband Operation
- Common Source Configuration
- Lower Noise Floor
- 100 MHz to 500 MHz Operation

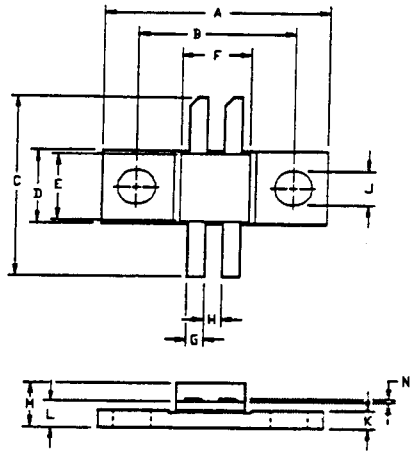

LETTER DIM	MILLIMETERS MIN	MILLIMETERS MAX	INCHES MIN	INCHES MAX
A	20.70	20.96	.815	.825
B	14.35	14.61	.565	.575
C	15.67	17.45	.617	.687
D	6.27	6.53	.247	.257
E	6.22	6.48	.245	.255
F	6.22	6.48	.245	.255
G	1.40	1.65	.055	.065
H	1.40	1.65	.055	.065
J	2.92	3.18	.115	.125
K	1.40	1.65	.055	.065
L	1.96	2.46	.077	.097
M	3.61	4.37	.142	.172
N	.08	.13	.003	.005

Absolute Maximum Ratings at 25°C

Parameter	Symbol	Rating	Units
Drain-Source Voltage	V_{DS}	65	V
Gate-Source Voltage	V_{GS}	20	V
Drain-Source Current	I_{DS}	1.4*	A
Power Dissipation	P_D	26.9	W
Junction Temperature	T_J	200	°C
Storage Temperature	T_{STG}	-55 to +150	°C
Thermal Resistance	θ_{JC}	6.5	°C/W

Electrical Characteristics at 25°C

Parameter	Symbol	Min	Max	Units	Test Conditions
Drain-Source Breakdown Voltage	BV_{DSS}	65	-	V	V_{GS}=0.0 V, I_{DS}=2.0 mA*
Drain-Source Leakage Current	I_{DSS}	-	1.0	mA	V_{DS}=28.0 V, V_{GS}=0.0 V*
Gate-Source Leakage Current	I_{GSS}	-	1.0	µA	V_{GS}=20 V, V_{DS}=0.0 V*
Gate Threshold Voltage	$V_{GS(TH)}$	2.0	6.0	V	V_{DS}=10.0 V, I_{DS}=10.0 mA*
Forward Transconductance	G_M	80	-	mS	V_{DS}=10.0 V, I_{DS}=100.0 mA, ΔV_{GS}=1.0 V, 80 µs Pulse*
Input Capacitance	C_{ISS}	-	7	pF	V_{DS}=28.0 V, F=1.0 MHz*
Output Capacitance	C_{OSS}	-	5	pF	V_{DS}=28.0 V, F=1.0 MHz*
Reverse Capacitance	C_{RSS}	-	2.4	pF	V_{DS}=28.0 V, F=1.0 MHz*
Power Gain	G_P	10	-	dB	V_{DD}=28.0 V, I_{DQ}=100.0 mA, P_{OUT}=10.0 W, F=500 MHz
Drain Efficiency	η_D	50	-	%	V_{DD}=28.0 V, I_{DQ}=100.0 mA, P_{OUT}=10.0 W, F=500 MHz
Load Mismatch Tolerance	VSWR-T	-	20:1	-	V_{DD}=28.0 V, I_{DQ}=100.0 mA, P_{OUT}=10.0 W, F=500 MHz

* Per Side

pecifications Subject to Change Without Notice.

Typical Device Impedance

Frequency (MHz)	Z_{IN} (OHMS)	Z_{LOAD} (OHMS)
100	30.0 - j 150.0	70.0 + j 110.0
300	15.0 - j 90.0	55.0 + j 80.0
500	4.2 - j 46.0	48.0 + j 50.0

V_{DD}=28 V, I_{DQ}=100 mA, P_{OUT}=10.0 Watts

Z_{IN} is the series equivalent input impedance of the device from gate to gate.

Z_{LOAD} is the optimum series equivalent load impedance as measured from drain to drain.

RF Test Fixture

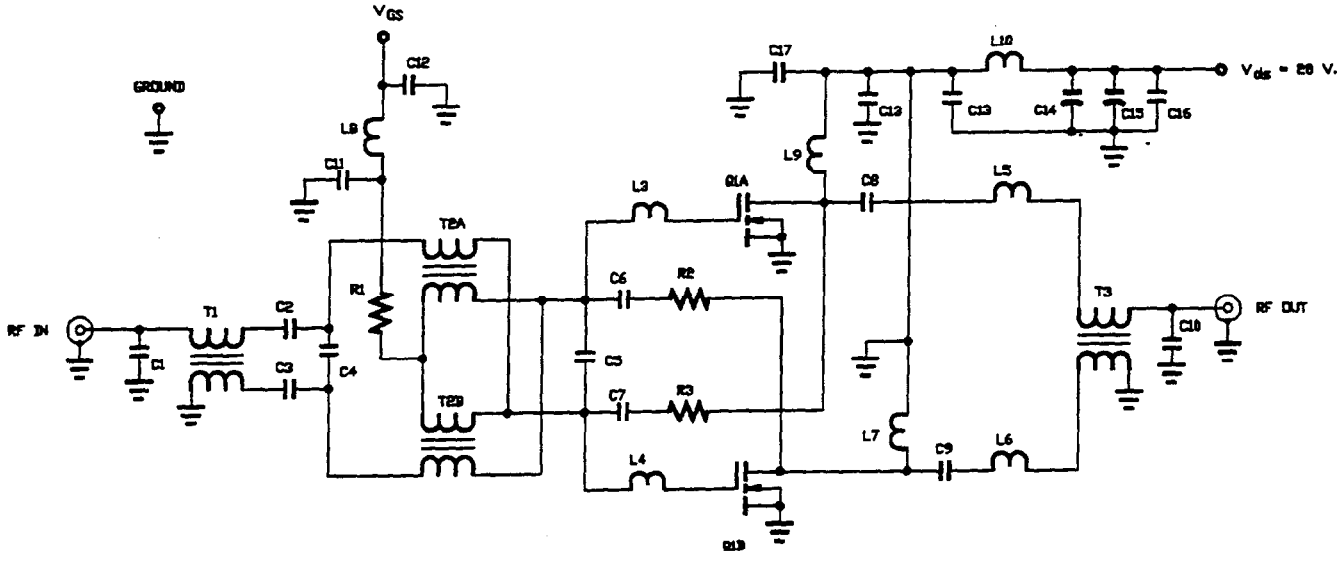

P A R T S L I S T

C10	2.7 pf
C5	3.0 PF
C1	6.8 pf
C4	15 pf
C2, 3, 6, 7, 8, 9	500 pf
C11, 12, 13, 14, 17	.015 uf
C15	.10 uf
C16	50 uf 50 V.
R1	100 OHM .25 W.
R2, 3	1.1K OHM .25 W.
T1, 2, 3	2.50" OF 50 OHM SEMI-RIGID COAX
L8, 10	7 TURNS OF NO. 22 AWG WIRE
L7, 9	15 TURNS OF NO. 22 AWG WIRE
L1, 2	.35" OF 50 OHM TRANSMISSION LINE
L3, 4	.70" OF 50 OHM TRANSMISSION LINE
L5, 6	1.0" OF 50 OHM TRANSMISSION LINE
Q1	UF2810P