Dual-Axis ±5 *g* Accelerometer with SPI Interface

ADIS16006

FEATURES

Dual-axis accelerometer
SPI® digital output interface
Internal temperature sensor
Highly integrated; minimal external components
Bandwidth externally selectable
1.9 m*g* resolution at 60 Hz
Externally controlled electrostatic self-test
3.0 V to 5.25 V single-supply operation
Low power: <2 mA
3500 *g* shock survival
7.2 mm × 7.2 mm × 3.6 mm package

APPLICATIONS

Industrial vibration/motion sensing
Platform stabilization
Dual-axis tilt sensing
Tracking, recording, analysis devices
Alarms, security devices

GENERAL DESCRIPTION

The ADIS16006 is a low cost, low power, complete dual-axis accelerometer with an integrated serial peripheral interface (SPI). An integrated temperature sensor is also available on the SPI interface. The ADIS16006 measures acceleration with a full-scale range of ±5 *g* (minimum). The ADIS16006 can measure both dynamic acceleration (that is, vibration) and static acceleration (that is, gravity).

The typical noise floor is 200 μg/√Hz, allowing signals below 1.9 mg (60 Hz bandwidth) to be resolved.

The bandwidth of the accelerometer is set with optional capacitors, C_X and C_Y, at the XFILT and YFILT pins. Digital output data for both axes is available via the serial interface.

An externally driven self-test pin (ST) allows the user to verify the accelerometer functionality.

The ADIS16006 is available in a 7.2 mm × 7.2 mm × 3.6 mm, 12-terminal LGA package.

FUNCTIONAL BLOCK DIAGRAM

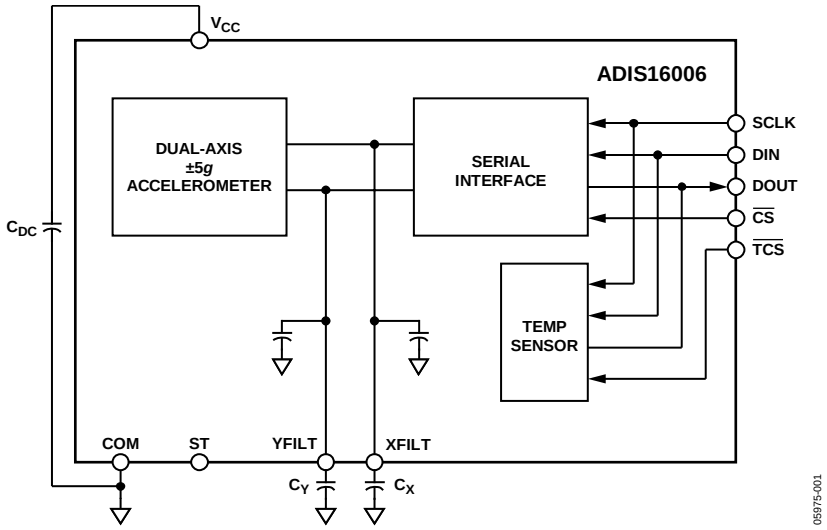

Figure 1.

Rev. 0

One Technology Way, P.O. Box 9106, Norwood, MA 02062-9106, U.S.A.
Tel: 781.329.4700 **www.analog.com**
Fax: 781.461.3113

TABLE OF CONTENTS

Features ... 1
Applications ... 1
General Description ... 1
Functional Block Diagram ... 1
Revision History ... 2
Specifications ... 3
  Timing Characteristics ... 4
  Circuit and Timing Diagrams ... 4
Absolute Maximum Ratings ... 6
  ESD Caution ... 6
Pin Configuration and Function Descriptions ... 7
Typical Performance Characteristics ... 8
Theory of Operation ... 11
  Self-Test ... 11
  Serial Interface ... 11
  Accelerometer Serial Interface ... 11
  Temperature Sensor Serial Interface ... 12
  Power Supply Decoupling ... 12
  Setting the Bandwidth ... 13
  Selecting Filter Characteristics: The Noise/Bandwidth Trade-Off ... 13
Applications ... 14
  Second Level Assembly ... 14
Outline Dimensions ... 15
  Ordering Guide ... 15

REVISION HISTORY

3/06—Revision 0: Initial Version

SPECIFICATIONS

T_A = −40°C to +125°C, V_{CC} = 5 V, C_X = C_Y = 0 µF, acceleration = 0 *g*, unless otherwise noted. All minimum and maximum specifications are guaranteed. Typical specifications are not guaranteed.

Table 1.

Parameter	Conditions	Min	Typ	Max	Unit
ACCELEROMETER SENSOR INPUT	Each axis				
Measurement Range[1]		±5			*g*
Nonlinearity	% of full scale		±0.5	±2.5	%
Package Alignment Error			±1.5		degrees
Alignment Error	X sensor to Y sensor		±0.1		degrees
Cross Axis Sensitivity			±1.5	±3	%
ACCELEROMETER SENSITIVITY	Each axis				
Sensitivity at XFILT, YFILT		242	256	272	LSB/g
Sensitivity Change due to Temperature[2]	Delta from 25°C		±0.3		%
ZERO *g* BIAS LEVEL	Each axis				
0 *g* Voltage at XFILT, YFILT		1905	2048	2190	LSB
0 *g* Offset vs. Temperature			±0.1		LSB/°C
ACCELEROMETER NOISE PERFORMANCE					
Noise Density	@ 25°C		200		µ*g*/√Hz rms
ACCELEROMETER FREQUENCY RESPONSE[3, 4]					
C_X, C_Y Range		0		10	µF
R_{FILT} Tolerance		24	32	40	kΩ
Sensor Bandwidth	C_X = 0µF, C_Y = 0µF		2.26		kHz
Sensor Resonant Frequency			5.5		kHz
ACCELEROMETER SELF-TEST					
Logic Input Low				0.2 × V_{CC}	V
Logic Input High		0.8 × V_{CC}			V
ST Input Resistance to COM		30	50		kΩ
Output Change at X_{OUT}, Y_{OUT}[5]	Self-Test 0 to Self-Test 1	102	205	307	LSB
TEMPERATURE SENSOR					
Accuracy	V_{CC} = 3 V to 5.25 V		±2		°C
Resolution			10		Bits
Update Rate			400		µs
Temperature Conversion Time			25		µs
DIGITAL INPUT					
Input High Voltage (V_{INH})	V_{CC} = 4.75 V to 5.25 V	2.4			V
	V_{CC} = 3.0 V to 3.6 V	2.1			V
Input Low Voltage (V_{INL})	V_{CC} = 3.0 V to 5.25 V			0.8	V
Input Current	V_{IN} = 0 V or V_{CC}	−10	1	10	µA
Input Capacitance			10		pF
DIGITAL OUTPUT					
Output High Voltage (V_{OH})	I_{SOURCE} = 200 µA, V_{CC} = 3.0 V to 5.25 V	V_{CC} − 0.5			V
Output Low Voltage (V_{OL})	I_{SINK} = 200 µA			0.4	V

Parameter	Conditions	Min	Typ	Max	Unit
POWER SUPPLY					
Operating Voltage Range		3.0		5.25	V
Quiescent Supply Current	F_{SCLK} = 50 kSPS		1.5	1.9	mA
Power-Down Current			1.0		mA
Turn-On Time[6]	C_X, C_Y = 0.1 µF		20		ms

[1] Guaranteed by measurement of initial offset and sensitivity.
[2] Defined as the output change from ambient to maximum temperature or ambient to minimum temperature.
[3] Actual bandwidth response controlled by user-supplied external capacitor (C_X, C_Y).
[4] See the Setting the Bandwidth section for more information on how to reduce the bandwidth.
[5] Self-test response changes as the square of V_{CC}.
[6] Larger values of C_X and C_Y increase turn-on time. Turn-on time is approximately (160 × (0.0022 + C_X or C_Y) + 4) in milliseconds, where C_X and C_Y are in µF.

TIMING CHARACTERISTICS

T_A = −40°C to +125°C, acceleration = 0 *g*, unless otherwise noted.

Table 2.

Parameter[1, 2]	V_{CC} = 3.3 V	V_{CC} = 5 V	Unit	Description
f_{SCLK}[3]	10	10	kHz min	
	2	2	MHz max	
$t_{CONVERT}$	14.5 × t_{SCLK}	14.5 × t_{SCLK}		
t_{ACQ}	1.5 × t_{SCLK}	1.5 × t_{SCLK}		Throughput time = $t_{CONVERT}$ + t_{ACQ} = 16 × t_{SCLK}
t_1	10	10	ns min	$\overline{TCS}/\overline{CS}$ to SCLK setup time
t_2[4]	60	30	ns max	Delay from $\overline{TCS}/\overline{CS}$ until DOUT three-state disabled
t_3[4]	100	75	ns max	Data access time after SCLK falling edge
t_4	20	20	ns min	Data setup time prior to SCLK rising edge
t_5	20	20	ns min	Data hold time after SCLK rising edge
t_6	0.4 × t_{SCLK}	0.4 × t_{SCLK}	ns min	SCLK high pulse width
t_7	0.4 × t_{SCLK}	0.4 × t_{SCLK}	ns min	SCLK low pulse width
t_8[5]	80	80	ns max	$\overline{TCS}/\overline{CS}$ rising edge to DOUT high impedance
t_9	5	5	µs typ	Power-up time from shutdown

[1] Guaranteed by design. All input signals are specified with t_R and t_F = 5 ns (10% to 90% of V_{CC}) and timed from a voltage level of 1.6 V. The 3.3 V operating range spans from 3.0 V to 3.6 V. The 5 V operating range spans from 4.75 V to 5.25 V.
[2] See Figure 3 and Figure 4.
[3] Mark/space ratio for the SCLK input is 40/60 to 60/40.
[4] Measured with the load circuit in Figure 2 and defined as the time required for the output to cross 0.4 V or 2.0 V with V_{CC} = 3.3 V and time for an output to cross 0.8 V or 2.4 V with V_{CC} = 5.0 V.
[5] t_8 is derived from the measured time taken by the data outputs to change 0.5 V when loaded with the circuit in Figure 2. The measured number is then extrapolated back to remove the effects of charging or discharging the 50 pF capacitor. This means that the time, t_8, quoted in the Timing Characteristics is the true bus relinquish time of the part and is independent of the bus loading.

CIRCUIT AND TIMING DIAGRAMS

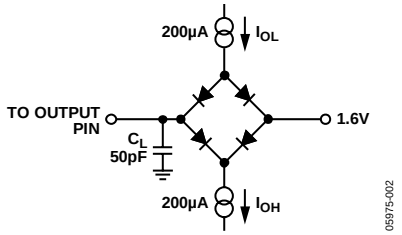

Figure 2. Load Circuit for Digital Output Timing Specifications

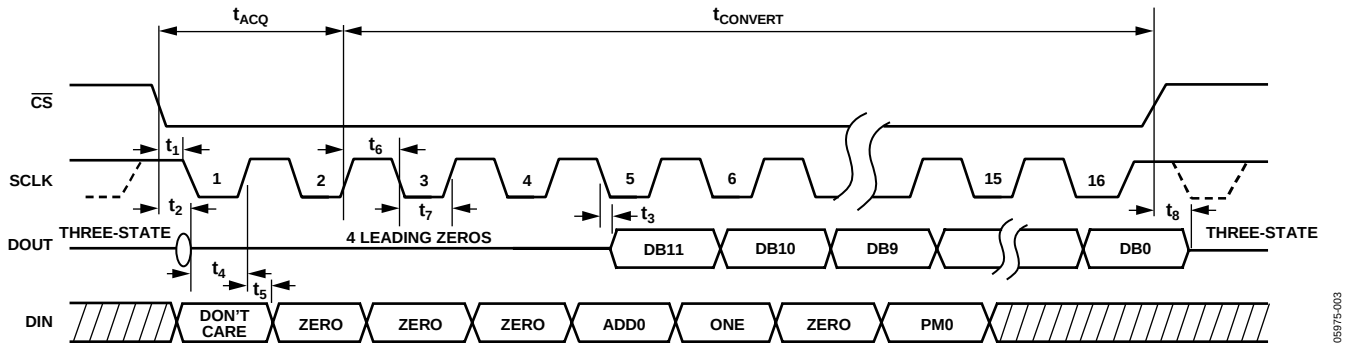

Figure 3. Accelerometer Serial Interface Timing Diagram

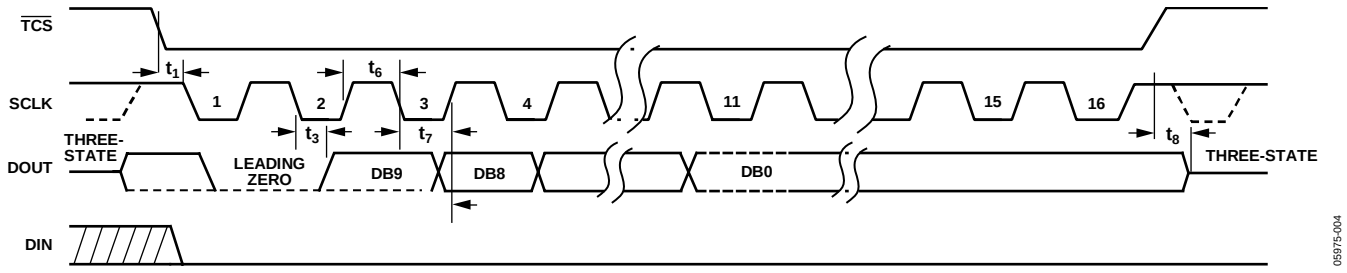

Figure 4. Temperature Serial Interface Timing Diagram

ABSOLUTE MAXIMUM RATINGS

Table 3.

Parameter	Rating
Acceleration (Any Axis, Unpowered)	3500 *g*
Acceleration (Any Axis, Powered)	3500 *g*
V_{CC}	−0.3 V to +7.0 V
All Other Pins	(COM − 0.3 V) to (V_{CC} + 0.3 V)
Output Short-Circuit Duration (Any Pin to Common)	Indefinite
Operating Temperature Range	−40°C to +125°C
Storage Temperature	−65°C to +150°C

Stresses above those listed under Absolute Maximum Ratings may cause permanent damage to the device. This is a stress rating only; functional operation of the device at these or any other conditions above those indicated in the operational section of this specification is not implied. Exposure to absolute maximum rating conditions for extended periods may affect device reliability.

Table 4. Package Characteristics

Package Type	θ_{CA}	θ_{JC}	Device Weight
12-Lead LGA	200°C/W	25°C/W	0.3 grams

ESD CAUTION

ESD (electrostatic discharge) sensitive device. Electrostatic charges as high as 4000 V readily accumulate on the human body and test equipment and can discharge without detection. Although this product features proprietary ESD protection circuitry, permanent damage may occur on devices subjected to high energy electrostatic discharges. Therefore, proper ESD precautions are recommended to avoid performance degradation or loss of functionality.

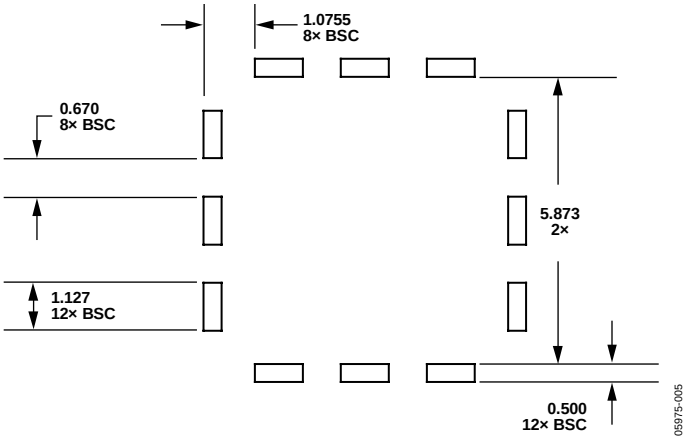

Figure 5. Second Level Assembly Pad Layout

PIN CONFIGURATION AND FUNCTION DESCRIPTIONS

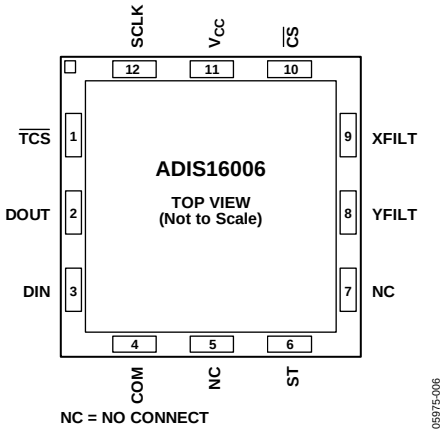

Figure 6. Pin Configuration

Table 5. Pin Function Descriptions

Pin No.	Mnemonic	Description
1	$\overline{TCS}$	Temperature Chip Select. Active low logic input. This input frames the serial data transfer for the temperature sensor output.
2	DOUT	Data Out, Logic Output. The conversion of the ADIS16006 is provided on this output as a serial data stream. The bits are clocked out on the falling edge of the SCLK input.
3	DIN	Data In, Logic Input. Data to be written into the ADIS16006's control register is provided on this input and is clocked into the register on the rising edge of SCLK.
4	COM	Common. Reference point for all circuitry on the ADIS16006.
5, 7	NC	No Connect.
6	ST	Self-Test Input. Active high logic input. Simulates a nominal 0.75 *g* test input for diagnostic purpose.
8	YFILT	Y Channel Filter Node. Used in conjunction with an optional external capacitor to band limit the noise contribution from the accelerometer.
9	XFILT	X Channel Filter Node. Used in conjunction with an optional external capacitor to band limit the noise contribution from the accelerometer.
10	$\overline{CS}$	Chip Select. Active low logic input. This input provides the dual function of initiating the accelerometer conversions on the ADIS16006 and framing the serial data transfer for the accelerometer output.
11	V_{CC}	Power Supply Input. The V_{CC} range for the ADIS16006 is 3.0 V to 5.25 V.
12	SCLK	Serial Clock, Logic Input. SCLK provides the serial clock for accessing data from the part and writing serial data to the control register. This clock input is also used as the clock source for the ADIS16006's conversion process.

TYPICAL PERFORMANCE CHARACTERISTICS

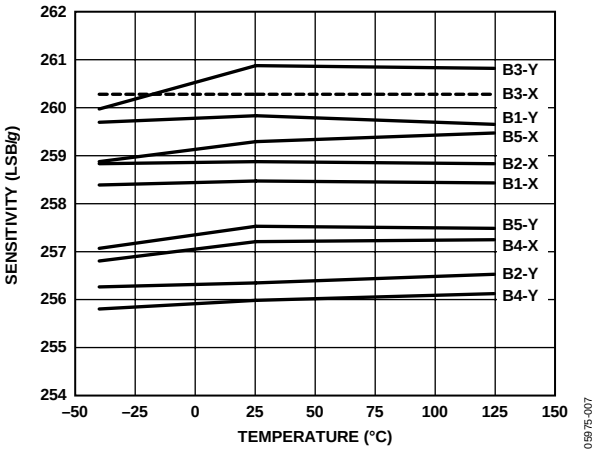

Figure 7. Sensitivity vs. Temperature (±1 g Stimulus)

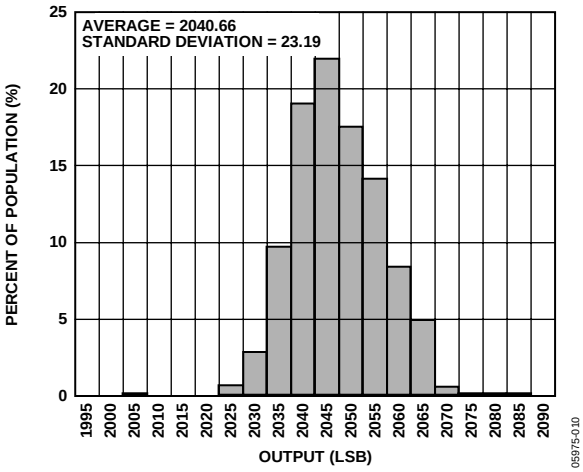

Figure 10. X-Axis 0 g Bias at 25°C

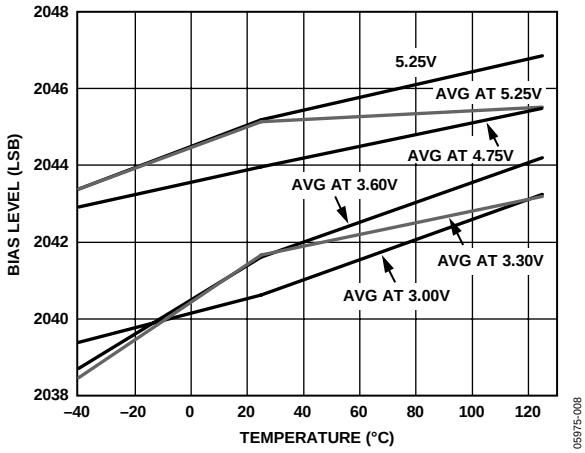

Figure 8. X-Axis 0 g Bias vs. Temperature

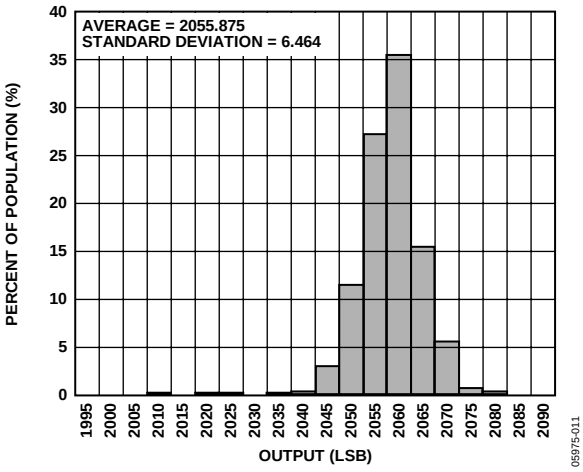

Figure 11. Y-Axis 0 g Bias at 25°C

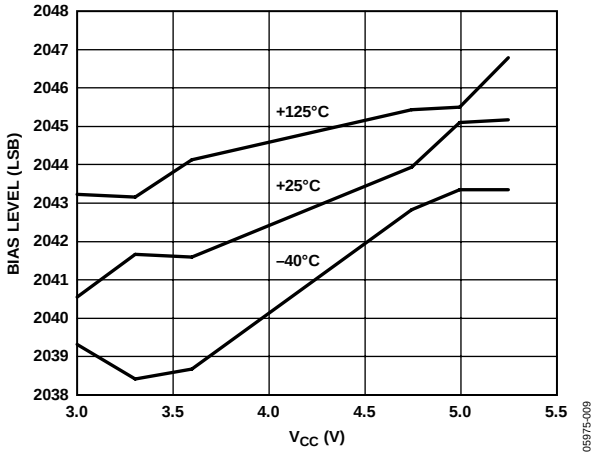

Figure 9. X-Axis 0 g Bias vs. Supply Voltage

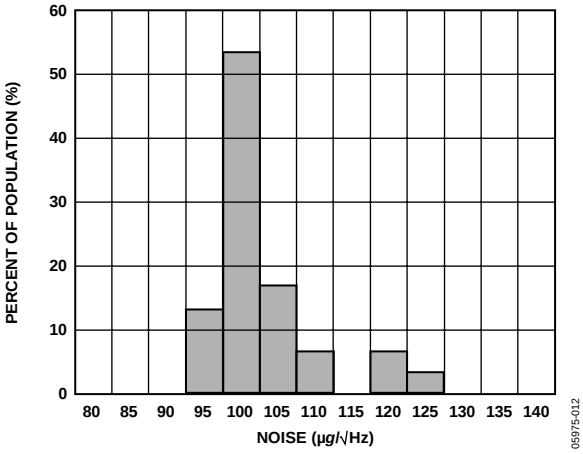

Figure 12. Noise (X-Axis) at V_{CC} = 5 V, 25°C

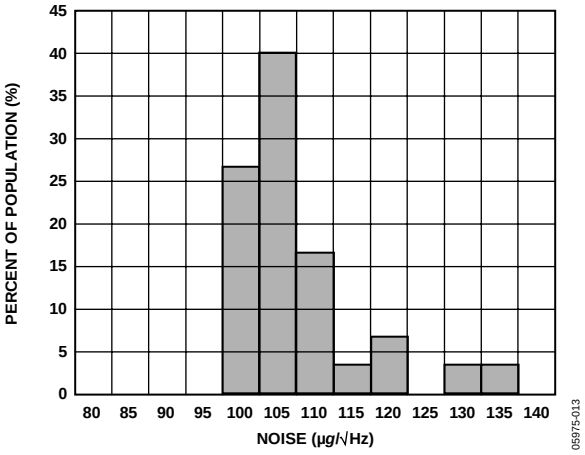

Figure 13. Noise (Y-Axis) at V_{CC} = 5 V, 25°C

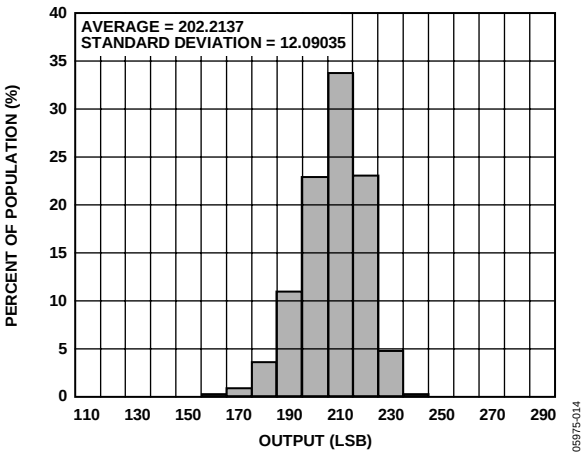

Figure 14. X-Axis Self-Test at 25°C, V_{CC} = 5 V

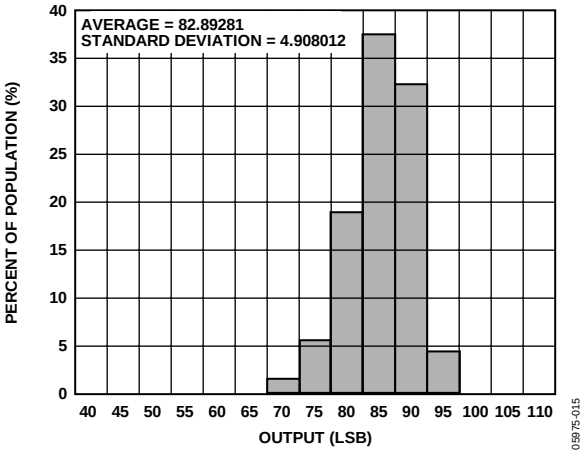

Figure 15. X-Axis Self-Test at 25°C, V_{CC} = 3.3 V

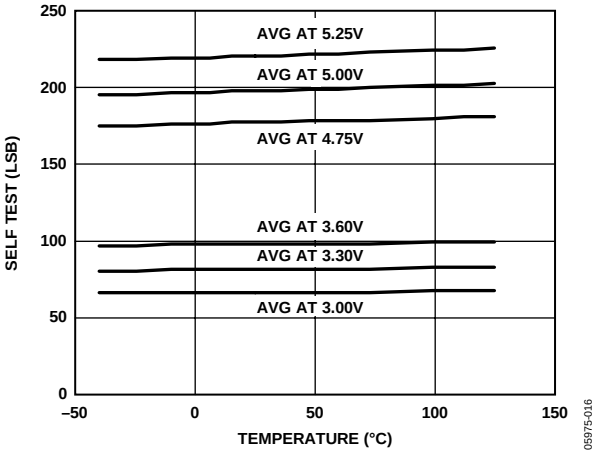

Figure 16. Self-Test X-Axis vs. Temperature

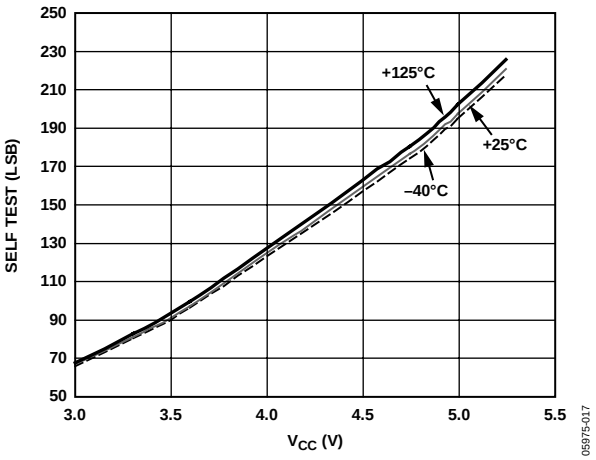

Figure 17. Self-Test X-Axis vs. Supply Voltage

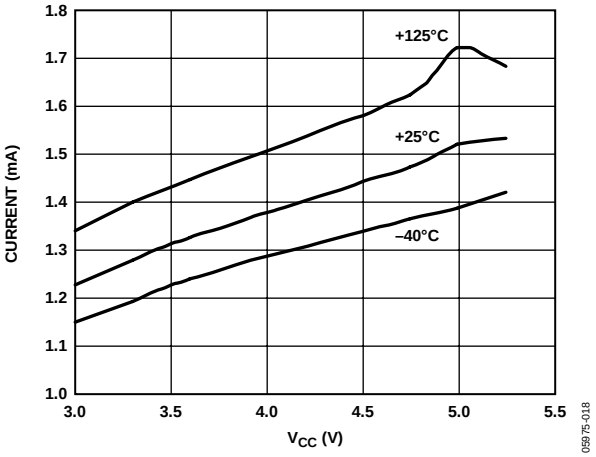

Figure 18. Supply Current vs. Supply Voltage

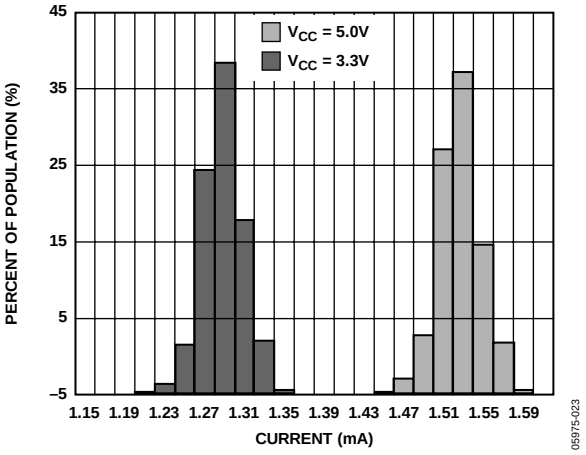

Figure 19. Supply Current at 25°C

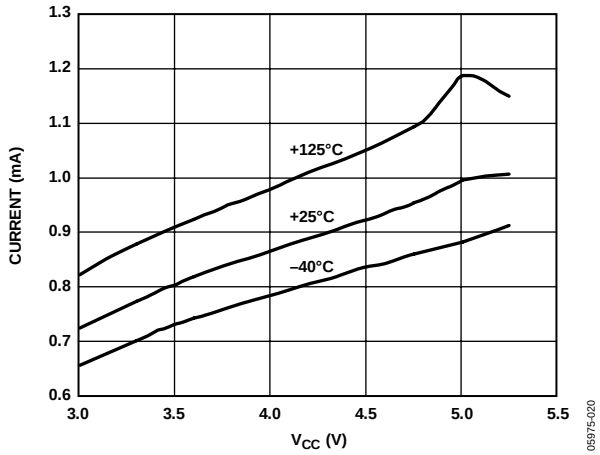

Figure 21. Power-Down Supply Current vs. Supply Voltage

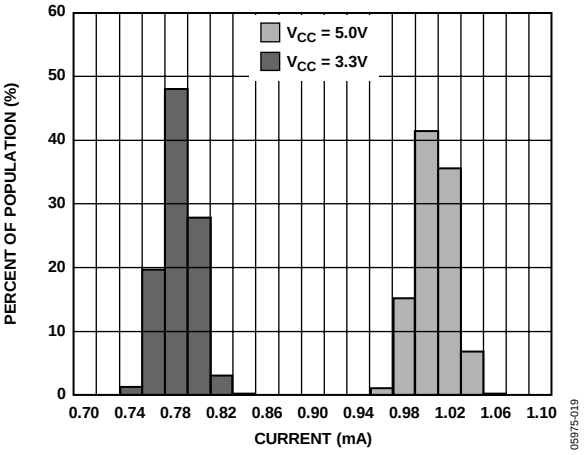

Figure 20. Power-Down Supply Current

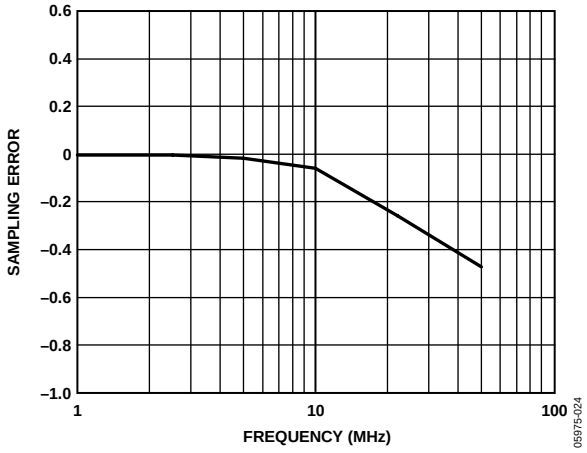

Figure 22. Sampling Error vs. Sampling Frequency

THEORY OF OPERATION

The ADIS16006 is a low cost, low power, complete dual-axis accelerometer with an integrated serial peripheral interface (SPI) and an integrated temperature sensor whose output is also available on the SPI interface. The ADIS16006 is capable of measuring acceleration with a full-scale range of ±5 *g* (minimum). The ADIS16006 can measure both dynamic acceleration (that is, vibration) and static acceleration (that is, gravity).

SELF-TEST

The ST pin controls the self-test feature. When this pin is set to V_{CC}, an electrostatic force is exerted on the beam of the accelerometer. The resulting movement of the beam allows the user to test if the accelerometer is functional. The typical change in output is 801 mg (corresponding to 205 LSB) for V_{CC} = 5.0 V. This pin may be left open-circuit or connected to common in normal use. The ST pin should never be exposed to voltage greater than V_{CC} + 0.3 V. If the system design is such that this condition cannot be guaranteed (that is, multiple supply voltages present), a low V_F clamping diode between ST and V_{CC} is recommended.

SERIAL INTERFACE

The serial interface on the ADIS16006 consists of five wires: $\overline{CS}$, $\overline{TCS}$, SCLK, DIN, and DOUT. Both accelerometer axes and the temperature sensor data are available on the serial interface. The $\overline{CS}$ and $\overline{TCS}$ are used to select the accelerometer or temperature sensor outputs, respectively. $\overline{CS}$ and $\overline{TCS}$ cannot be active at the same time.

The SCLK input provides access to data from the internal data registers.

ACCELEROMETER SERIAL INTERFACE

Figure 3 shows the detailed timing diagram for serial interfacing to the accelerometer in the ADIS16006. The serial clock provides the conversion clock. $\overline{CS}$ initiates the conversion process and data transfer and also frames the serial data transfer for the accelerometer output. The accelerometer output is sampled on the second rising edge of the SCLK input after the falling edge of the $\overline{CS}$. The conversion requires 16 SCLK cycles to complete. The rising edge of $\overline{CS}$ puts the bus back into three-state. If $\overline{CS}$ remains low, the next digital conversion is initiated. The details for the control register bit functions are shown in Table 6.

Accelerometer Control Register

MSB							LSB
DONTC	ZERO	ZERO	ZERO	ZERO	ONE	ZERO	PM0

Table 6. Accelerometer Control Register Bit Functions

Bit	Mnemonic	Comments
7	DONTC	Don't care. Can be 1 or 0.
6, 5, 4	ZERO	These bits should be held low.
3	ADD0	This address bit selects the X-axis or Y-axis outputs. A 0 selects the X-axis; a 1 selects the Y-axis.
2	ONE	This bit should be held high.
1	ZERO	This bit should be held low.
0	PM0	This bit selects the operation mode for the accelerometer; set to 0 for normal operation and 1 for power-down mode.

Power-Down

By setting PM0 to 1 when updating the accelerometer control register, the ADIS16006 is put into a shutdown mode. The information stored in the control register is maintained during shutdown. The ADIS16006 changes modes as soon as the control register is updated. Therefore, if the part is in shutdown mode and PM0 is changed to 0, the part powers up on the 16th SCLK rising edge.

ADD0

By setting ADD0 to 0 when updating the accelerometer control register, the X-axis output is selected. By setting ADD0 to 1, the Y-axis output is selected.

ZERO

ZERO is defined as the logic low level.

ONE

ONE is defined as the logic high level.

DONTC

DONTC is defined as don't care and can be a low or high logic level.

Accelerometer Conversion Details

Every time the accelerometer is sampled, the sampling function discharges the internal C_X or C_Y filtering capacitors by up to 2% of their initial values (assuming no additional external filtering capacitors have been added). The recovery time for the filter capacitor to recharge is approximately 10 µs. Thus, sampling the accelerometer at a rate of 10 kSPS or less does not induce a sampling error. However, as sampling frequencies increase above 10 kSPS, one can expect sampling errors to attenuate the actual acceleration levels.

TEMPERATURE SENSOR SERIAL INTERFACE

Read Operation

Figure 4 shows the timing diagram for a serial read from the temperature sensor. The $\overline{TCS}$ line enables the SCLK input. Ten bits of data and a leading 0 are transferred during a read operation. Read operations occur during streams of 16 clock pulses. The serial data can be received into two bytes to accommodate the entire 10-bit data stream. If only eight bits of resolution are required, then the data can be received into a single byte. At the end of the read operation, the DOUT line remains in the state of the last bit of data clocked out until $\overline{TCS}$ goes high, at which time the DOUT line from the temperature sensor goes three-state.

Write Operation

Figure 4 also shows the timing diagram for the serial write to the temperature sensor. The write operation takes place at the same time as the read operation. Data is clocked into the control register on the rising edge of SCLK. DIN should remain low for the entire cycle.

Temperature Sensor Control Register

MSB							LSB
ZERO	ZERO	ZERO	ZERO	ZERO	ZERO	ZERO	ZERO

Table 7. Temperature Sensor Control Register Bit Functions

Bit	Mnemonic	Comments
7 to 0	ZERO	All bits should be held low.

ZERO

ZERO is defined as the logic low level.

Output Data format

The output data format for the temperature sensor is twos complement. Table 8 shows the relationship between the digital output and the temperature.

Temperature Sensor Conversion Details

The ADIS16006 features a 10-bit digital temperature sensor that allows accurate measurement of the ambient device temperature.

The conversion clock for the temperature sensor is internally generated so no external clock is required except when reading from and writing to the serial port. In normal mode, an internal clock oscillator runs the automatic conversion sequence. A conversion is initiated approximately every 350 µs. At this time, the temperature sensor wakes up and performs a temperature conversion. This temperature conversion typically takes 25 µs, at which time the temperature sensor automatically shuts down. The result of the most recent temperature conversion is available in the serial output register at any time. Once the conversion is finished, an internal oscillator starts counting and is designed to time out every 350 µs. The temperature sensor then powers up and does a conversion.

Note that if the $\overline{TCS}$ is brought low every 350 µs (±30%) or less, the same temperature value is output onto the DOUT line every time without changing. It is recommended that the $\overline{TCS}$ line not be brought low every 350 µs (±30%) or less. The ±30% covers process variation. The $\overline{TCS}$ should become active (high to low) outside this range.

The device is designed to autoconvert every 350 µs. If the temperature sensor is accessed during the conversion process, an internal signal is generated to prevent any update of the temperature value register during the conversion. This prevents the user from reading back spurious data. The design of this feature results in this internal lockout signal being reset only at the start of the next autoconversion. Therefore, if the $\overline{TCS}$ line goes active before the internal lockout signal is reset to its inactive mode, the internal lockout signal is not reset. To ensure that no lockout signal is set, bring $\overline{TCS}$ low at a greater time than 350 µs (±30%). As a result, the temperature sensor is not interrupted during a conversion process.

In the automatic conversion mode, every time a read or write operation takes place, the internal clock oscillator is restarted at the end of the read or write operation. The result of the conversion is typically available 25 µs later. Reading from the device before conversion is complete provides the same set of data.

Table 8. Temperature Sensor Data Format

Temperature	Digital Output (DB9 … DB0)
–40°C	11 0110 0000
–25°C	11 1001 1100
–0.25°C	11 1111 1111
0°C	00 0000 0000
+0.25°C	00 0000 0001
+10°C	00 0010 1000
+25°C	00 0110 0100
+50°C	00 1100 1000
+75°C	01 0010 1100
+100°C	01 1001 0000
+125°C	01 1111 0100

POWER SUPPLY DECOUPLING

The ADIS16006 integrates two decoupling capacitors that are 0.047 µF in value. For local operation of the ADIS16006, no additional power supply decoupling capacitance is required. However, if the system power supply presents a substantial amount of noise, additional filtering can be required. If additional capacitors are required, connect the ground terminal of each of these capacitors directly to the underlying ground plane. Finally, note that all analog and digital grounds should be referenced to the same system ground reference point.

SETTING THE BANDWIDTH

The ADIS16006 has provisions for band limiting the accelerometer. Capacitors can be added at the XFILT and YFILT pins to implement further low-pass filtering for antialiasing and noise reduction. The equation for the 3 dB bandwidth is

$$F_{-3dB} = 1/(2\pi(32\ \text{k}\Omega) \times (C_{(XFILT,\ YFILT)} + 2200\ \text{pF}))$$

or more simply,

$$F_{-3dB} = 5\ \mu\text{F}/(C_{(XFILT,\ YFILT)} + 2200\ \text{pF})$$

The tolerance of the internal resistor (R_{FILT}) can vary typically as much as ±25% of its nominal value (32 kΩ); thus, the bandwidth varies accordingly.

A minimum capacitance of 0 pF for C_{XFILT} and C_{YFILT} is allowable.

Table 9. Filter Capacitor Selection, C_{XFILT} and C_{YFILT}

Bandwidth (Hz)	Capacitor (µF)
1	4.7
10	0.47
50	0.10
100	0.047
200	0.022
400	0.01
2250	0

SELECTING FILTER CHARACTERISTICS: THE NOISE/BANDWIDTH TRADE-OFF

The accelerometer bandwidth selected ultimately determines the measurement resolution (smallest detectable acceleration). Filtering can be used to lower the noise floor, which improves the resolution of the accelerometer. Resolution is dependent on the analog filter bandwidth at XFILT and YFILT.

The ADIS16006 has a typical bandwidth of 2.25 kHz with no external filtering. The analog bandwidth may be further decreased to reduce noise and improve resolution.

The ADIS16006 noise has the characteristics of white Gaussian noise, which contributes equally at all frequencies and is described in terms of µg/√Hz (that is, the noise is proportional to the square root of the accelerometer's bandwidth). The user should limit bandwidth to the lowest frequency needed by the application to maximize the resolution and dynamic range of the accelerometer.

With the single pole roll-off characteristic, the typical noise of the ADIS16006 is determined by

$$rmsNoise = (200\ \mu g/\text{root Hz}) \times (\text{root}(BW \times 1.57))$$

At 100 Hz, the noise is

$$rmsNoise = (200\ \mu g/\text{root Hz}) \times (\text{root}(100 \times 1.57)) = 2.5\ mg$$

Often, the peak value of the noise is desired. Peak-to-peak noise can be estimated only by statistical methods. Table 10 is useful for estimating the probabilities of exceeding various peak values, given the rms value.

Table 10. Estimation of Peak-to-Peak Noise

Peak-to-Peak Value	Percentage of Time That Noise Exceeds Nominal Peak-to-Peak Value
2 × rms	32%
4 × rms	4.6%
6 × rms	0.27%
8 × rms	0.006%

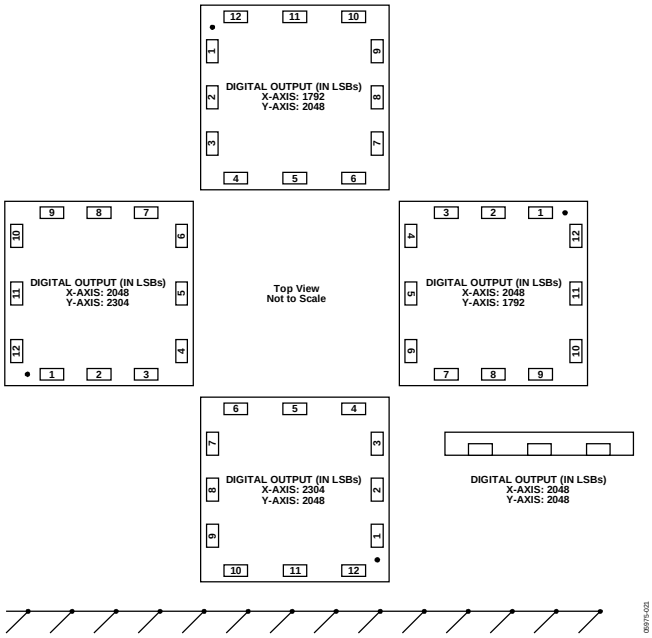

Figure 23. Output Response vs. Orientation

APPLICATIONS

SECOND LEVEL ASSEMBLY

The ADIS16006 can be attached to the second-level assembly board using SN63 (or equivalent) or lead-free solder. Figure 24 and Table 11 provide acceptable solder reflow profiles for each solder type. Note that these profiles cannot be the optimum profile for the user's application. In no case shall 260°C be exceeded. It is recommended that the user develop a reflow profile based upon the specific application. In general, keep in mind the lowest peak temperature and shortest dwell time above the melt temperature of the solder result in less shock and stress to the product. In addition, evaluating the cooling rate and peak temperature can result in a more reliable assembly.

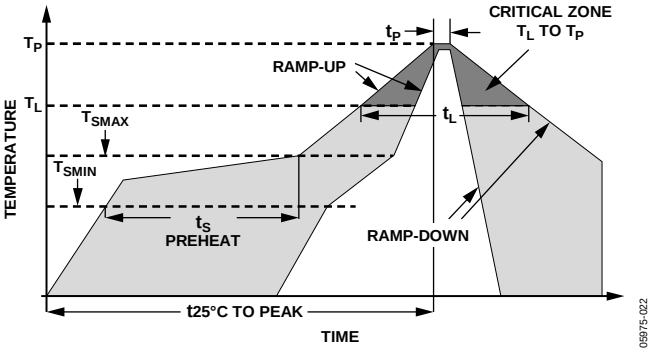

Figure 24. Acceptable Solder Reflow Profiles

Table 11.

Profile Feature	Condition	
	Sn63/Pb37	**Pb-free**
Average Ramp Rate (T_L to T_P)	3°C/sec max	3°C/sec max
Preheat		
Minimum Temperature (T_{SMIN})	100°C	150°C
Maximum Temperature (T_{SMAX})	150°C	200°C
Time (T_{SMIN} to T_{SMAX}) (t_s)	60 sec to 120 sec	60 sec to 150 sec
T_{SMAX} to T_L		
Ramp-Up Rate	3°C/sec	3°C/sec
Time Maintained		
Above Liquidous (T_L)		
Liquidous Temperature (T_L)	183°C	217°C
Time (t_L)	60 sec to 150 sec	60 sec to 150 sec
Peak Temperature (T_P)	240°C + 0°C/−5°C	260°C + 0°C/−5°C
Time Within 5°C of Actual Peak Temperature (t_p)	10 sec to 30 sec	20 sec to 40 sec
Ramp-Down Rate	6°C/sec max	6°C/sec max
Time 25°C to Peak Temperature	6 min max	8 min max

OUTLINE DIMENSIONS

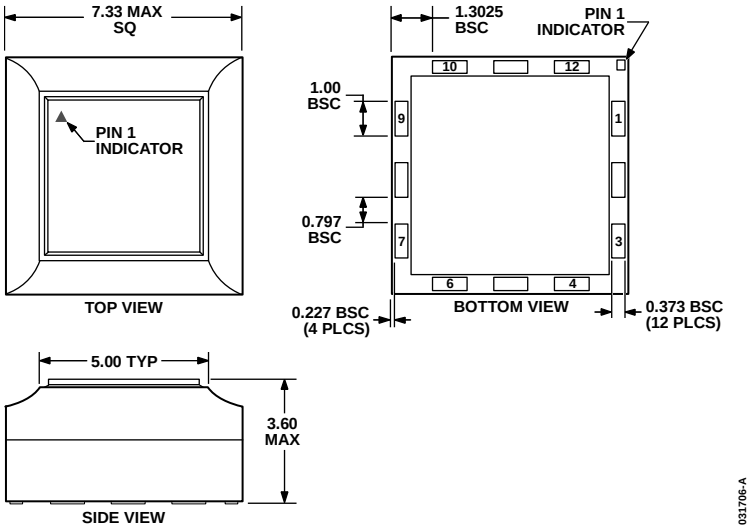

Figure 25. 12-Terminal Land Grid Array [LGA]
(CC-12-1)
Dimensions shown in millimeters

ORDERING GUIDE

Model	Temperature Range	Package Description	Package Option
ADIS16006CCCZ[1]	−40°C to +125°C	12-Terminal Land Grid Array (LGA)	CC-12-1
ADIS16006/PCB		Evaluation Board	

[1] Z = Pb-free part.

NOTES