ANALOG DEVICES

16-/32- Channel, 3.5 Ω 1.8 V to 5.5 V, ±2.5 V, Analog Multiplexers

Preliminary Technical Data ADG726/ADG732

FEATURES
1.8 V to 5.5 V Single Supply
±2.5 V Dual Supply Operation
3.5 Ω On Resistance
0.5 Ω On Resistance Flatness
Rail to Rail Operation
30ns Switching Times
Single 32 to 1 Channel Multiplexer
Dual/Differential 16 to 1 Channel Multiplexer
TTL/CMOS Compatible Inputs
For Functionally Equivalent devices with Serial Interface
See ADG725/ADG731

APPLICATIONS
Optical Applications
Data Acquisition Systems
Communication Systems
Relay replacement
Audio and Video Switching
Battery Powered Systems
Medical Instrumentation
Automatic Test Equipment

FUNCTIONAL BLOCK DIAGRAMS

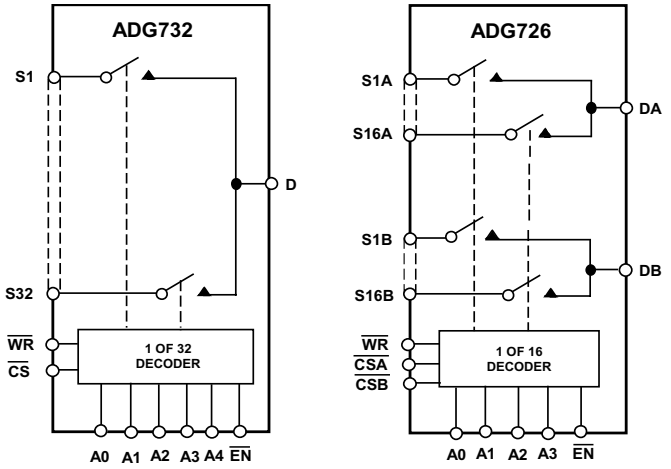

GENERAL DESCRIPTION

The ADG726/ADG732 are monolithic CMOS 32 channel/dual 16 channel analog multiplexers. The ADG732 switches one of thirty-two inputs (S1-S32) to a common output, D, as determined by the 5-bit binary address lines A0, A1, A2, A3 and A4. The ADG726 switches one of sixteen inputs as determined by the four bit binary address lines, A0, A1, A2 and A3.

On chip latches facilitate microprocessor interfacing. The ADG726 device may also be configured for differential operation by tying CSA and CSB together. An $\overline{EN}$ input is used to enable or disable the devices. When disabled, all channels are switched OFF.

These multiplexers are designed on an enhanced submicron process that provides low power dissipation yet gives high switching speed, very low on resistance and leakage currents. They operate from single supply of 1.8V to 5.5V and ±2.5 V dual supply, making them ideally suited to a variety of applications. On resistance is in the region of a few Ohms and is closely matched between switches and very flat over the full signal range. These parts can operate equally well as either Multiplexers or De-Multiplexers and have an input signal range which extends to the supplies. In the OFF condition, signal levels up to the supplies are blocked. All channels exhibit break before make switching action preventing momentary shorting when switching channels.

They are available in either 48 lead LFCSP or TQFP package.

PRODUCT HIGHLIGHTS

1. +1.8 V to +5.5 V Single or ±2.5 V Dual Supply operation. These parts are specified and guaranteed with +5 V ±10%, +3 V ±10% single supply and ±2.5 V ±10% dual supply rails.
2. On Resistance of 3.5 Ω.
3. Guaranteed Break-Before-Make Switching Action.
4. 7mm x 7mm 48 lead LF Chip Scale Package (CSP) or 48 lead TQFP package.

REV. PrD 2001

One Technology Way, P.O. Box 9106, Norwood, MA 02062-9106, U.S.A.
Tel: 781/329-4700 World Wide Web Site: http://www.analog.com
Fax: 781/326-8703 Analog Devices, Inc., 2001

ADG726/ADG732–SPECIFICATIONS[1] (V_{DD} = 5V ± 10%, V_{SS} = 0V, GND = 0 V, unless otherwise noted)

Parameter	B Version +25°C	B Version –40°C to +85°C	Units	Test Conditions/Comments
ANALOG SWITCH				
Analog Signal Range		0 V to V_{DD}	V	
On-Resistance (R_{ON})	3.5		Ω typ	V_S = 0 V to V_{DD}, I_{DS} = 10 mA;
	5.5	6	Ω max	Test Circuit 1
On-Resistance Match Between		0.3	Ω typ	V_S = 0 V to V_{DD} , I_{DS} = 10 mA
Channels (ΔR_{ON})		0.8	Ω max	
On-Resistance Flatness ($R_{FLAT(ON)}$)	0.5		Ω typ	V_S = 0 V to V_{DD}, I_{DS} = 10 mA
		1.2	Ω max	
LEAKAGE CURRENTS				V_{DD} = 5.5 V
Source OFF Leakage I_S (OFF)	±0.01		nA typ	V_D = 4.5 V/1 V, V_S = 1 V/4.5 V;
	±0.5	±5	nA max	Test Circuit 2
Drain OFF Leakage I_D (OFF)	±0.01		nA typ	V_D = 4.5 V/1 V, V_S = 1 V/4.5 V;
	±0.5	±5	nA max	Test Circuit 3
Channel ON Leakage I_D, I_S (ON)	±0.01		nA typ	V_D = V_S = 1 V, or 4.5V;
	±1	±10	nA max	Test Circuit 4
DIGITAL INPUTS				
Input High Voltage, V_{INH}		2.4	V min	
Input Low Voltage, V_{INL}		0.8	V max	
Input Current				
I_{INL} or I_{INH}	0.005		µA typ	V_{IN} = V_{INL} or V_{INH}
		±0.1	µA max	
C_{IN}, Digital Input Capacitance	5		pF typ	
DYNAMIC CHARACTERISTICS[2]				
$t_{TRANSITION}$	40		ns typ	R_L = 300 Ω, C_L = 35 pF,Test Circuit 5;
		60	ns max	V_{S1} = 3 V/0 V, V_{S32} = 0 V/3V
Break-Before-Make Time Delay, t_D	30		ns typ	R_L = 300 Ω, C_L = 35 pF;
		1	ns min	V_S = 3 V, Test Circuit 6
t_{ON}(EN, $\overline{WR}$)	32		ns typ	R_L = 300 Ω, C_L = 35 pF;
		50	ns max	V_S = 3 V, Test Circuit 7
t_{OFF}(EN)	10		ns typ	R_L = 300 Ω, C_L = 35 pF;
		14	ns max	V_S = 3 V, Test Circuit 8
Charge Injection	±5		pC typ	V_S = 0 V, R_S = 0 Ω, C_L = 1 nF; Test Circuit 9
Off Isolation	-60		dB typ	R_L = 50 Ω, C_L = 5 pF, f = 100 kHz; Test Circuit 10
Channel to Channel Crosstalk	-60		dB typ	R_L = 50 Ω, C_L = 5 pF, f = 100 kHz; Test Circuit 11
-3 dB Bandwidth	10		MHz typ	R_L = 50 Ω, C_L = 5 pF, Test Circuit 10
C_S (OFF)	13		pF typ	f = 1 MHz
C_D (OFF)				
ADG726	180		pF typ	f = 1 MHz
ADG732	360		pF typ	f = 1 MHz
C_D, C_S (ON)				
ADG726	200		pF typ	f = 1 MHz
ADG732	400		pF typ	f = 1 MHz
POWER REQUIREMENTS				V_{DD} = +5.5 V
I_{DD}	10		µA typ	Digital Inputs = 0 V or +5.5 V
		20	µA max	

NOTES
[1]Temperature range is as follows: B Version: –40°C to +85°C.
[2]Guaranteed by design, not subject to production test.
Specifications subject to change without notice.

SPECIFICATIONS[1] (V_{DD} = 3V ± 10%, V_{SS} = 0V, GND = 0 V, unless otherwise noted)

Parameter	B Version +25°C	B Version –40°C to +85°C	Units	Test Conditions/Comments
ANALOG SWITCH				
Analog Signal Range		0 V to V_{DD}	V	
On-Resistance (R_{ON})	6		Ω typ	V_S = 0 V to V_{DD}, I_{DS} = 10 mA;
	11	12	Ω max	Test Circuit 1
On-Resistance Match Between		0.4	Ω typ	V_S = 0 V to V_{DD} , I_{DS} = 10 mA
Channels (ΔR_{ON})		1.2	Ω max	
On-Resistance Flatness ($R_{FLAT(ON)}$)		3	Ω max	V_S = 0 V to V_{DD}, I_{DS} = 10 mA
LEAKAGE CURRENTS				V_{DD} = 3.3 V
Source OFF Leakage I_S (OFF)	±0.01		nA typ	V_S = 3 V/1 V, V_D = 1 V/3 V;
	±1	±5	nA max	Test Circuit 2
Drain OFF Leakage I_D (OFF)	±0.01		nA typ	V_S = 1 V/3 V, V_D = 3 V/1 V;
	±1	±5	nA max	Test Circuit 3
Channel ON Leakage I_D, I_S (ON)	±0.01		nA typ	V_S = V_D = +1 V or +3 V;
	±1	±10	nA max	Test Circuit 4
DIGITAL INPUTS				
Input High Voltage, V_{INH}		2.0	V min	
Input Low Voltage, V_{INL}		0.8	V max	
Input Current				
I_{INL} or I_{INH}	0.005		µA typ	V_{IN} = V_{INL} or V_{INH}
		±0.1	µA max	
C_{IN}, Digital Input Capacitance	5		pF typ	
DYNAMIC CHARACTERISTICS[2]				
$t_{TRANSITION}$	45		ns typ	R_L = 300 Ω, C_L = 35 pF Test Circuit 5
		75	ns max	V_{S1} = 2 V/0 V, V_{S32} = 0 V/2 V
Break-Before-Make Time Delay, t_D	30		ns typ	R_L = 300 Ω, C_L = 35 pF;
		1	ns min	V_S = 2 V, Test Circuit 6
t_{ON}(EN, $\overline{WR}$)	40		ns typ	R_L = 300 Ω, C_L = 35 pF;
		70	ns max	V_S = 2 V, Test Circuit 7
t_{OFF}(EN)	20		ns typ	R_L = 300 Ω, C_L = 35 pF;
		28	ns max	V_S = 2 V, Test Circuit 8
Charge Injection	±5		pC typ	V_S = 0 V, R_S = 0 Ω, C_L = 1 nF; Test Circuit 9
Off Isolation	-60		dB typ	R_L = 50 Ω, C_L = 5 pF, f = 1 MHz; Test Circuit 10
Channel to Channel Crosstalk	-60		dB typ	R_L = 50 Ω, C_L = 5 pF, f = 1 MHz; Test Circuit 11
-3 dB Bandwidth	10		MHz typ	R_L = 50 Ω, C_L = 5 pF, Test Circuit 10
C_S (OFF)	13		pF typ	f = 1 MHz
C_D (OFF)				
ADG726	180		pF typ	f = 1 MHz
ADG732	360		pF typ	f = 1 MHz
C_D, C_S (ON)				
ADG726	200		pF typ	f = 1 MHz
ADG732	400		pF typ	f = 1 MHz
POWER REQUIREMENTS				V_{DD} = +3.3 V
I_{DD}	10		µA typ	Digital Inputs = 0 V or +3.3 V
		20	µA max	

NOTES
[1]Temperature ranges are as follows: B Version: –40°C to +85°C.
[2]Guaranteed by design, not subject to production test.

Specifications subject to change without notice.

ADG726/ADG732–SPECIFICATIONS[1] Dual Supply

(V_{DD} = +2.5 V ±10%, V_{SS} = -2.5 V ±10%, GND = 0 V, unless otherwise noted)

Parameter	B Version +25°C	B Version –40°C to +85°C	Units	Test Conditions/Comments
ANALOG SWITCH				
Analog Signal Range		V_{SS} to V_{DD}	V	
On-Resistance (R_{ON})	3.5		Ω typ	V_S = V_{SS} to V_{DD}, I_{DS} = 10 mA;
	5.5	6	Ω max	Test Circuit 1
On-Resistance Match Between		0.3	Ω typ	V_S = V_{SS} to V_{DD}, I_{DS} = 10 mA
Channels (ΔR_{ON})		0.8	Ω max	
On-Resistance Flatness ($R_{FLAT(ON)}$)	0.5		Ω typ	V_S = V_{SS} to V_{DD}, I_{DS} = 10 mA
		1.2	Ω max	
LEAKAGE CURRENTS				V_{DD} = +2.75 V, V_{SS} = -2.75 V
Source OFF Leakage I_S (OFF)	±0.01		nA typ	V_S = +2.25 V/-1.25 V, V_D = -1.25 V/+2.25 V;
	±1	±5	nA max	Test Circuit 2
Drain OFF Leakage I_D (OFF)	±0.01		nA typ	V_S = +2.25 V/-1.25 V, V_D = -1.25 V/+2.25 V;
	±1	±5	nA max	Test Circuit 3
Channel ON Leakage I_D, I_S (ON)	±0.01		nA typ	V_S = V_D = +2.25 V/-1.25 V, Test Circuit 4
	±1	±10	nA max	
DIGITAL INPUTS				
Input High Voltage, V_{INH}		1.7	V min	
Input Low Voltage, V_{INL}		0.7	V max	
Input Current				
I_{INL} or I_{INH}	0.005		µA typ	V_{IN} = V_{INL} or V_{INH}
		±0.1	µA max	
C_{IN}, Digital Input Capacitance	5		pF typ	
DYNAMIC CHARACTERISTICS[2]				
$t_{TRANSITION}$	40		ns typ	R_L = 300 Ω, C_L = 35 pF Test Circuit 5
		60	ns max	V_{S1} = 1.5 V/0 V, V_{S32} = 0 V/1.5 V
Break-Before-Make Time Delay, t_D	15		ns typ	R_L = 300 Ω, C_L = 35 pF;
		1	ns min	V_S = 1.5 V, Test Circuit 6
t_{ON}(EN, $\overline{WR}$)	32		ns typ	R_L = 300 Ω, C_L = 35 pF;
		50	ns max	V_S = 1.5 V, Test Circuit 7
t_{OFF}(EN)	16		ns typ	R_L = 300 Ω, C_L = 35 pF;
		26	ns max	V_S = 1.5 V, Test Circuit 8
Charge Injection	±8		pC typ	V_S = 0 V, R_S = 0 Ω, C_L = 1 nF; Test 9
Off Isolation	-60		dB typ	R_L = 50 Ω, C_L = 5 pF, f = 1 MHz; Test Circuit 10
Channel to Channel Crosstalk	-60		dB typ	R_L = 50 Ω, C_L = 5 pF, f = 1 MHz; Test Circuit 11
-3 dB Bandwidth	10		MHz typ	R_L = 50 Ω, C_L = 5 pF, Test Circuit 10
C_S (OFF)	13		pF typ	
C_D (OFF)				
ADG726	180		pF typ	f = 1 MHz
ADG732	360		pF typ	f = 1 MHz
C_D, C_S (ON)				
ADG726	200		pF typ	f = 1 MHz
ADG732	400		pF typ	f = 1 MHz
POWER REQUIREMENTS				V_{DD} = +2.75 V
I_{DD}	10		µA typ	Digital Inputs = 0 V or +2.75 V
		20	µA max	
I_{SS}	10		µA typ	V_{SS} = -2.75 V
		20	µA max	Digital Inputs = 0 V or +2.75 V

NOTES
[1]Temperature range is as follows: B Version: –40°C to +85°C.
[2]Guaranteed by design, not subject to production test.

Specifications subject to change without notice.

TIMING CHARACTERISTICS[1,2,3]

Parameter	Limit at T_{MIN}, T_{MAX}	Units	Conditions/Comments
t_1	0	ns min	$\overline{CS}$ to $\overline{WR}$ Setup Time
t_2	0	ns min	$\overline{CS}$ to $\overline{WR}$ Hold Time
t_3	20	ns min	$\overline{WR}$ pulse width
t_4	10	ns min	Time between $\overline{WR}$ cycles
t_5	5	ns min	Address, Enable Setup Time
t_6	2	ns min	Address, Enable Hold Time

NOTES
[1]See Figure 1.
[2]All input signals are specified with tr =tf = 5ns (10% to 90% of V_{DD}) and timed from a voltage level of $(V_{IL} + V_{IH})/2$.
[3]Guaranteed by design and characterisation, not production tested.

Specifications subject to change without notice.

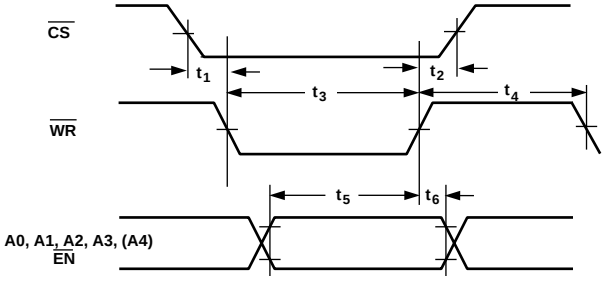

Figure 1. Timing Diagram

Figure 1 shows the timing sequence for latching the switch address and enable inputs. The latches are level sensitive; therefore, while $\overline{WR}$ is held low, the latches are transparent and the switches respond to the address and enable inputs. This input data is latched on the rising edge of $\overline{WR}$. The ADG726 has two $\overline{CS}$ inputs. This enables the part to be used either as a dual 16-1 channel multiplexer or a differential 16 channel multiplexer. If a differential output is required, tie $\overline{CSA}$ and $\overline{CSB}$ together.

ABSOLUTE MAXIMUM RATINGS[1]

(T_A = +25°C unless otherwise noted)

V_{DD} to V_{SS}	+7 V
V_{DD} to GND	–0.3 V to +7 V
V_{SS} to GND	+0.3 V to -7 V
Analog Inputs[2]	V_{SS} - 0.3 V to V_{DD} +0.3 Vor 30 mA, Whichever Occurs First
Digital Inputs[2]	-0.3V to V_{DD} +0.3 V or 30 mA, Whichever Occurs First
Peak Current, S or D	60mA (Pulsed at 1 ms, 10% Duty Cycle max)
Continuous Current, S or D	30mA
Operating Temperature Range Industrial (B Version)	–40°C to +85°C
Storage Temperature Range	–65°C to +150°C
Junction Temperature	+150°C
48 lead CSP θ_{JA} Thermal Impedance	TBD°C/W
48 lead TQFP θ_{JA} Thermal Impedance	TBD°C/W
Lead Temperature, Soldering (10seconds)	300°C
IR Reflow, Peak Temperature	+220°C

NOTES

[1]Stresses above those listed under "Absolute Maximum Ratings" may cause permanent damage to the device. This is a stress rating only and functional operation of the device at these or any other conditions above those listed in the operational sections of this specification is not implied. Exposure to absolute maximum rating conditions for extended periods may affect device reliability. Only one absolute maximum rating may be applied at any one time.

[2]Overvoltages at A, $\overline{WR}$, $\overline{RS}$, S or D will be clamped by internal diodes. Current should be limited to the maximum ratings given.

CAUTION

ESD (electrostatic discharge) sensitive device. Electrostatic charges as high as 4000 V readily accumulate on the human body and test equipment and can discharge without detection. Although the ADG726/ADG732 features proprietary ESD protection circuitry, permanent damage may occur on devices subjected to high energy electrostatic discharges. Therefore, proper ESD precautions are recommended to avoid performance degradation or loss of functionality.

ORDERING GUIDE

Model	Temperature Range	Package Description	Package Option
ADG726BCP	-40 °C to +85 °C	Chip Scale Package (CSP)	CP-48
ADG726BSU	-40 °C to +85 °C	Thin Quad Flatpack	SU-48
ADG732BCP	-40 °C to +85 °C	Chip Scale Package (CSP)	CP-48
ADG732BSU	-40 °C to +85 °C	Thin Quad Flatpack	SU-48

PIN CONFIGURATIONS
CSP & TQFP

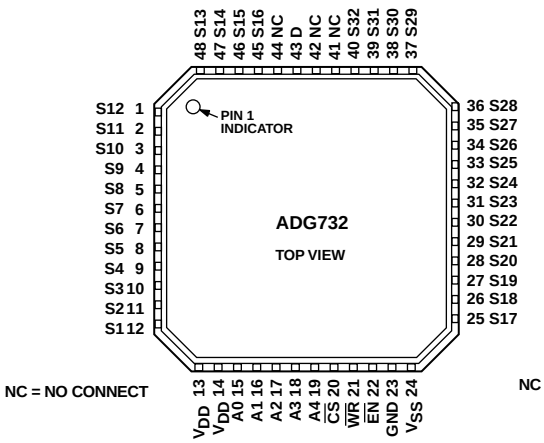

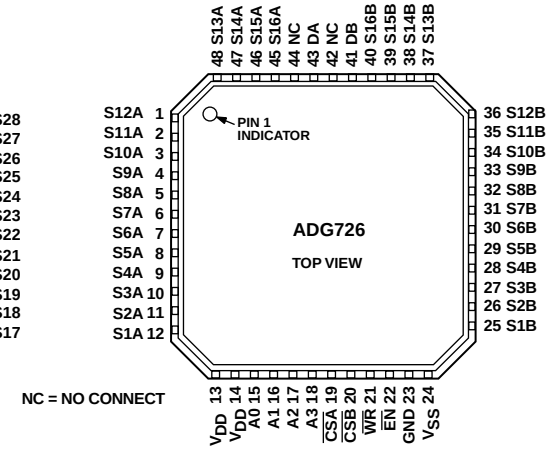

Table 1. ADG726 Truth Table

A3	A2	A1	A0	$\overline{E}$ $\overline{N}$	$\overline{C}$ $\overline{S}$ $\overline{A}$	$\overline{C}$ $\overline{S}$ $\overline{B}$	$\overline{W}$ $\overline{R}$	ON Switch
X	X	X	X	X	1	1	L->H	Retains previous switch condition
X	X	X	X	X	1	1	X	No Change in Switch condition
X	X	X	X	1	0	0	0	NONE
0	0	0	0	0	0	0	0	S1A - DA, S1B - DB
0	0	0	1	0	0	0	0	S2A - DA, S2B - DB
0	0	1	0	0	0	0	0	S3A - DA, S3B - DB
0	0	1	1	0	0	0	0	S4A - DA, S4B - DB
0	1	0	0	0	0	0	0	S5A - DA, S5B - DB
0	1	0	1	0	0	0	0	S6A - DA, S6B - DB
0	1	1	0	0	0	0	0	S7A - DA, S7B - DB
0	1	1	1	0	0	0	0	S8A - DA, S8B - DB
1	0	0	0	0	0	0	0	S9A - DA, S9B - DB
1	0	0	1	0	0	0	0	S10A - DA, S10B - DB
1	0	1	0	0	0	0	0	S11A - DA, S11B - DB
1	0	1	1	0	0	0	0	S12A - DA, S12B - DB
1	1	0	0	0	0	0	0	S13A - DA, S13B - DB
1	1	0	1	0	0	0	0	S14A - DA, S14B - DB
1	1	1	0	0	0	0	0	S15A - DA, S15B - DB
1	1	1	1	0	0	0	0	S16A - DA, S16B - DB

Table 2. ADG732 Truth Table

A4	A3	A2	A1	A0	$\overline{E}$ $\overline{N}$	$\overline{C}$ $\overline{S}$	$\overline{W}$ $\overline{R}$	Switch Condition
X	X	X	X	X	X	1	L->H	Retains previous switch condition
X	X	X	X	X	X	1	X	No Change in Switch Condition
X	X	X	X	X	1	0	0	NONE
0	0	0	0	0	0	0	0	1
0	0	0	0	1	0	0	0	2
0	0	0	1	0	0	0	0	3
0	0	0	1	1	0	0	0	4
0	0	1	0	0	0	0	0	5
0	0	1	0	1	0	0	0	6
0	0	1	1	0	0	0	0	7
0	0	1	1	1	0	0	0	8
0	1	0	0	0	0	0	0	9
0	1	0	0	1	0	0	0	10
0	1	0	1	0	0	0	0	11
0	1	0	1	1	0	0	0	12
0	1	1	0	0	0	0	0	13
0	1	1	0	1	0	0	0	14
0	1	1	1	0	0	0	0	15
0	1	1	1	1	0	0	0	16
1	0	0	0	0	0	0	0	17
1	0	0	0	1	0	0	0	18
1	0	0	1	0	0	0	0	19
1	0	0	1	1	0	0	0	20
1	0	1	0	0	0	0	0	21
1	0	1	0	1	0	0	0	22
1	0	1	1	0	0	0	0	23
1	0	1	1	1	0	0	0	24
1	1	0	0	0	0	0	0	25
1	1	0	0	1	0	0	0	26
1	1	0	1	0	0	0	0	27
1	1	0	1	1	0	0	0	28
1	1	1	0	0	0	0	0	29
1	1	1	0	1	0	0	0	30
1	1	1	1	0	0	0	0	31
1	1	1	1	1	0	0	0	32

X = Don't Care

TERMINOLOGY

V_{DD}	Most positive power supply potential.
V_{SS}	Most Negative power supply in a dual supply application. In single supply applications, connect to GND.
I_{DD}	Positive supply current.
I_{SS}	Negative supply current.
GND	Ground (0 V) reference.
S	Source terminal. May be an input or output.
D	Drain terminal. May be an input or output.
IN	Logic control input.
V_D (V_S)	Analog voltage on terminals D, S
R_{ON}	Ohmic resistance between D and S.
ΔR_{ON}	On resistance match between any two channels, i.e. R_{ON}max - R_{ON}min
$R_{FLAT(ON)}$	Flatness is defined as the difference between the maximum and minimum value of on-resistance as mea sured over the specified analog signal range.
I_S (OFF)	Source leakage current with the switch "OFF."
I_D (OFF)	Drain leakage current with the switch "OFF."
I_D, I_S (ON)	Channel leakage current with the switch "ON."
V_{INL}	Maximum input voltage for logic "0".
V_{INH}	Minimum input voltage for logic "1".
I_{INL}(I_{INH})	Input current of the digital input.
C_S (OFF)	"OFF" switch source capacitance. Measured with reference to ground.
C_D (OFF)	"OFF" switch drain capacitance. Measured with reference to ground.
C_D,C_S(ON)	"ON" switch capacitance. Measured with reference to ground.
C_{IN}	Digital input capacitance.
$t_{TRANSITION}$	Delay time measured between the 50% and 90% points of the digital inputs and the switch "ON" condi tion when switching from one address state to another.
$t_{ON}(\overline{EN})$	Delay time between the 50% and 90% points of the $\overline{EN}$ digital input and the switch "ON" condition.
$t_{OFF}(\overline{EN})$	Delay time between the 50% and 90% points of the $\overline{EN}$ digital input and the switch "OFF" condition.
t_{OPEN}	"OFF" time measured between the 80% points of both switches when switching from one address state to another.
Charge Injection	A measure of the glitch impulse transferred from the digital input to the analog output during switching.
Off Isolation	A measure of unwanted signal coupling through an "OFF" switch.
Crosstalk	A measure of unwanted signal is coupled through from one channel to another as a result of parasitic capacitance.
On Response	The Frequency response of the "ON" switch.
Insertion Loss	The loss due to the ON resistance of the switch.

TYPICAL PERFORMANCE CHARACTERISTICS

TBD

TPC 1. On Resistance as a Function of $V_D(V_S)$ for for Single Supply

TBD

TPC 4. On Resistance as a Function of $V_D(V_S)$ for Different Temperatures, Single Supply

TBD

TPC 7. Leakage Currents as a function of $V_D(V_S)$

TBD

TPC 2. On Resistance as a Function of $V_D(V_S)$ for Dual Supply

TBD

TPC 5. On Resistance as a Function of $V_D(V_S)$ for Different Temperatures, Dual Supply

TBD

TPC 8. Leakage Currents as a function of $V_D(V_S)$

TBD

TPC 3. On Resistance as a Function of $V_D(V_S)$ for Different Temperatures, Single Supply

TBD

TPC 6. Leakage Currents as a function of $V_D(V_S)$

TBD

TPC 9. Leakage Currents as a function of Temperature

TBD

TPC 10. Leakage Currents as a Function of Temperature

TBD

TPC 11. Supply Currents vs. Input Switching Frequency

TBD

TPC 12. Charge Injection vs. Source Voltage

TBD

TPC 13. T_{ON}/T_{OFF} Times vs. Temperature

TBD

TPC 14. Off Isolation vs. Frequency

TBD

TPC 15. Crosstalk vs. Frequency

TBD

TPC 16. On Response vs. Frequency

Test Circuits

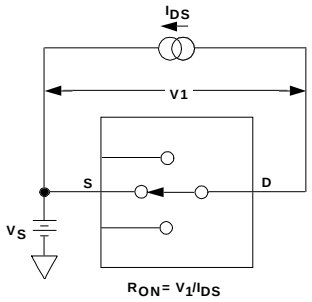

Test Circuit 1. On Resistance.

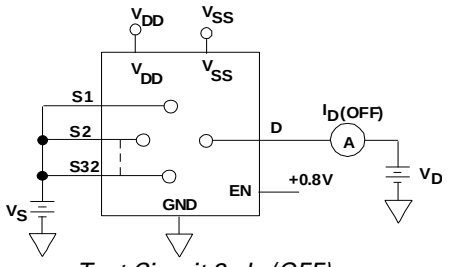

Test Circuit 3. I_D (OFF)

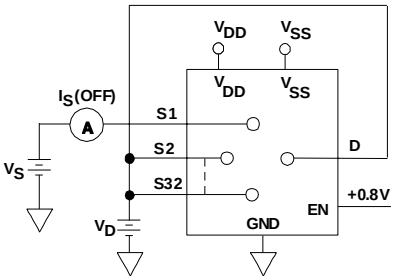

Test Circuit 2. I_S (OFF).

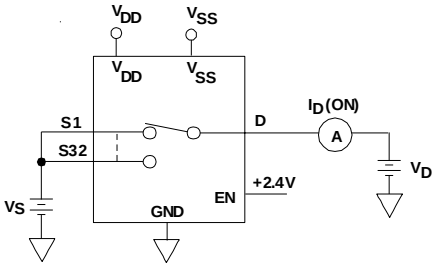

Test Circuit 4. I_D (ON)

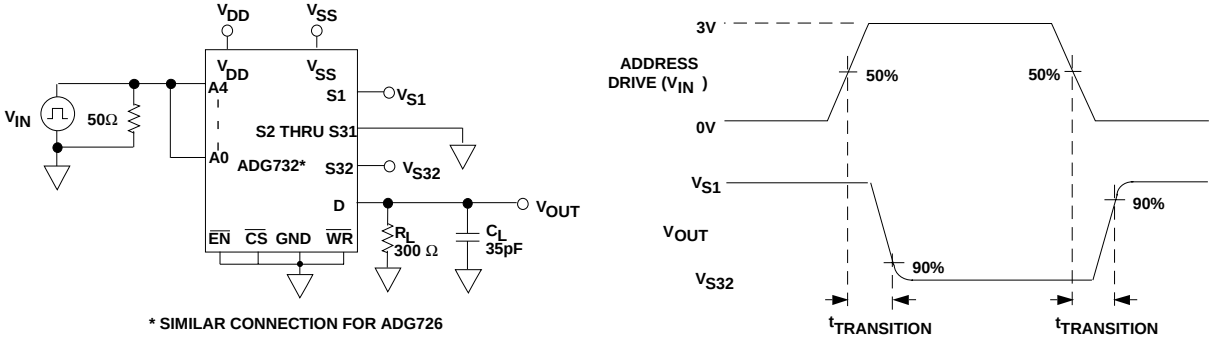

Test Circuit 5. Switching Time of Multiplexer, $t_{TRANSITION}$.

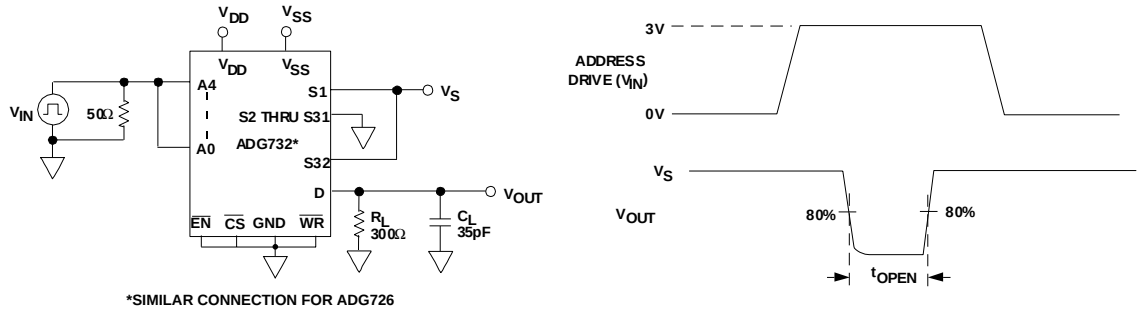

Test Circuit 6. Break Before Make Delay, t_{OPEN}.

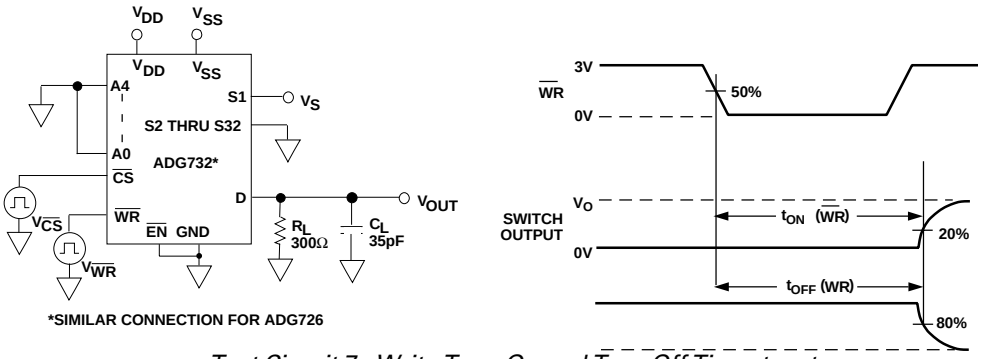

Test Circuit 7. Write Turn-On and Turn Off Time, t_{ON}, t_{OFF} (WR).

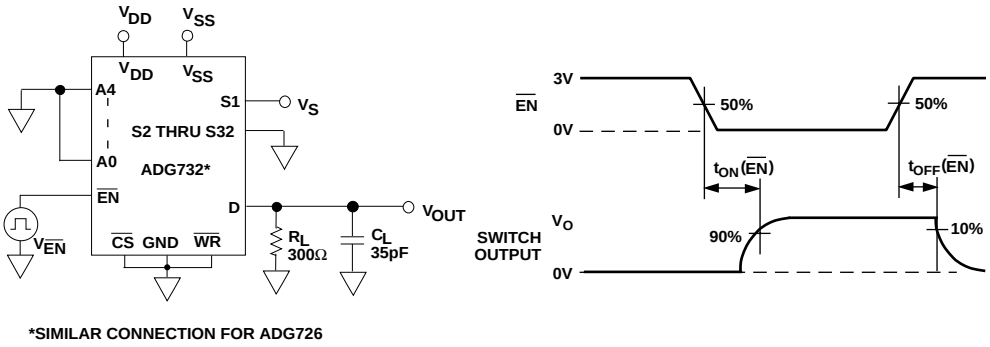

Test Circuit 8. Enable Delay, t_{ON}(EN), t_{OFF}(EN)

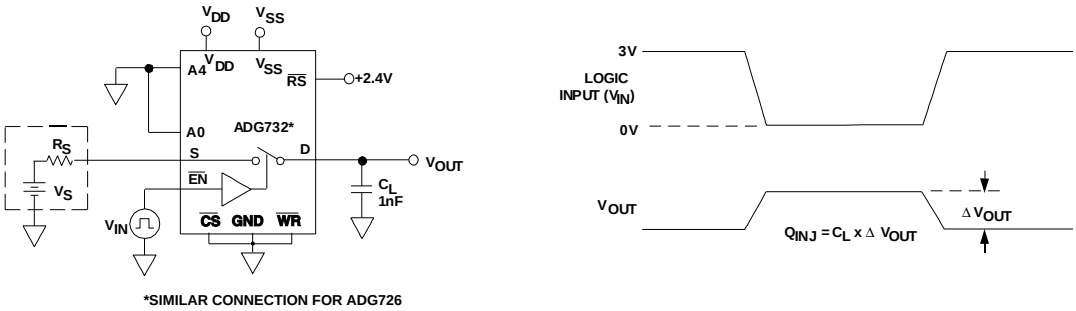

Test Circuit 9. Charge Injection.

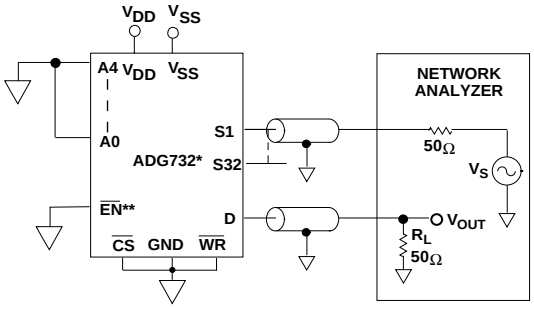

*SIMILAR CONNECTION FOR ADG726
** CONNECT TO 2.4V FOR CROSSTALK MEASUREMENTS
OFF ISOLATION = $20LOG_{10}(V_{OUT}/V_S)$
INSERTION LOSS = $20LOG_{10}\left(\frac{V_{OUT}\text{ WITH SWITCH}}{V_{OUT}\text{ WITHOUT SWITCH}}\right)$

Test Circuit 10. OFF Isolation and Bandwidth.

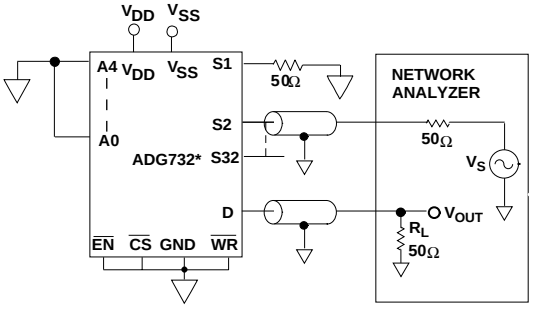

*SIMILAR CONNECTION FOR ADG726
CHANNEL TO CHANNEL CROSSTALK= $20LOG_{10}(V_{OUT}/V_S)$

Test Circuit 11. Channel-to-Channel Crosstalk.

OUTLINE DIMENSIONS

Dimensions shown in inches and (mm).

48-Lead CSP
(CP-48)

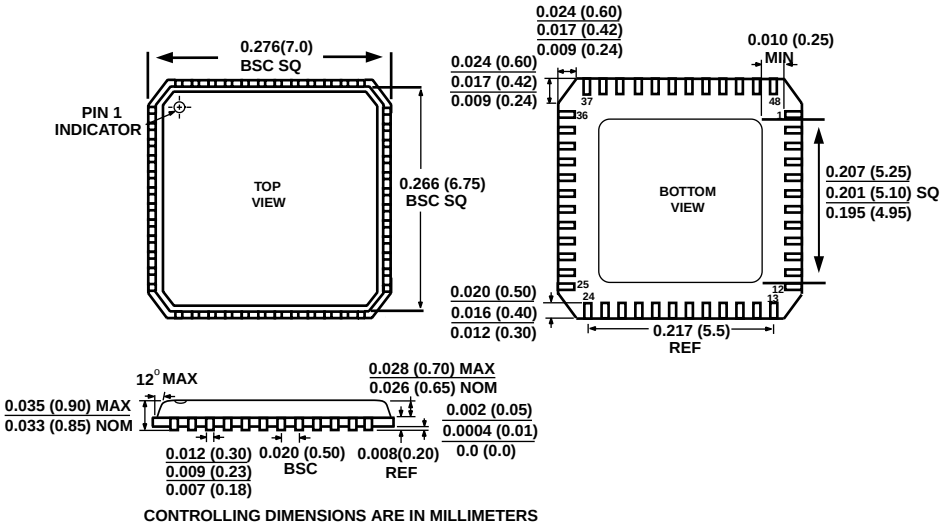

48-Lead TQFP
(SU-48)