LC^{2}MOS
8-Bit DAC with Output Amplifiers

AD7224

FEATURES
8-Bit CMOS DAC with Output Amplifiers
Operates with Single or Dual Supplies
Low Total Unadjusted Error:
Less Than 1 LSB Over Temperature
Extended Temperature Range Operation
µP-Compatible with Double Buffered Inputs
Standard 18-Pin DIPs, and 20-Terminal Surface Mount Package and SOIC Package

FUNCTIONAL BLOCK DIAGRAM

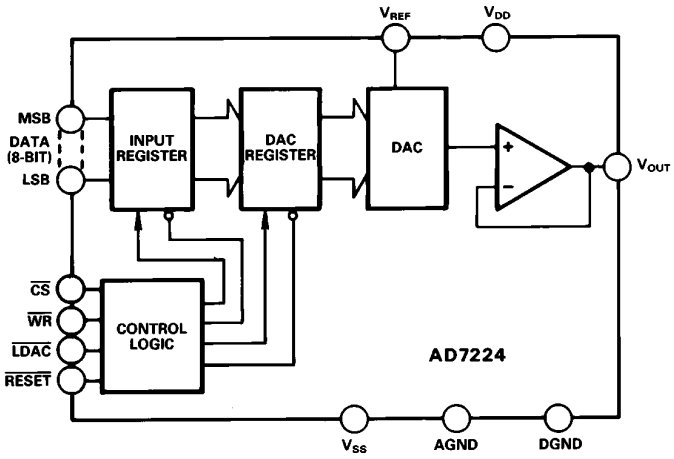

GENERAL DESCRIPTION

The AD7224 is a precision 8-bit voltage-output, digital-to-analog converter, with output amplifier and double buffered interface logic on a monolithic CMOS chip. No external trims are required to achieve full specified performance for the part.

The double buffered interface logic consists of two 8-bit registers–an input register and a DAC register. Only the data held in the DAC registers determines the analog output of the converter. The double buffering allows simultaneous update in a system containing multiple AD7224s. Both registers may be made transparent under control of three external lines, $\overline{CS}$, $\overline{WR}$ and $\overline{LDAC}$. With both registers transparent, the $\overline{RESET}$ line functions like a zero override; a useful function for system calibration cycles. All logic inputs are TTL and CMOS (5 V) level compatible and the control logic is speed compatible with most 8-bit microprocessors.

Specified performance is guaranteed for input reference voltages from +2 V to +12.5 V when using dual supplies. The part is also specified for single supply operation using a reference of +10 V. The output amplifier is capable of developing +10 V across a 2 kΩ load.

The AD7224 is fabricated in an all ion-implanted high speed Linear Compatible CMOS (LC^{2}MOS) process which has been specifically developed to allow high speed digital logic circuits and precision analog circuits to be integrated on the same chip.

PRODUCT HIGHLIGHTS

1. DAC and Amplifier on CMOS Chip
   The single-chip design of the 8-bit DAC and output amplifier is inherently more reliable than multi-chip designs. CMOS fabrication means low power consumption (35 mW typical with single supply).
2. Low Total Unadjusted Error
   The fabrication of the AD7224 on Analog Devices Linear Compatible CMOS (LC^{2}MOS) process coupled with a novel DAC switch-pair arrangement, enables an excellent total unadjusted error of less than 1 LSB over the full operating temperature range.
3. Single or Dual Supply Operation
   The voltage-mode configuration of the AD7224 allows operation from a single power supply rail. The part can also be operated with dual supplies giving enhanced performance for some parameters.
4. Versatile Interface Logic
   The high speed logic allows direct interfacing to most microprocessors. Additionally, the double buffered interface enables simultaneous update of the AD7224 in multiple DAC systems. The part also features a zero override function.

REV. B

Information furnished by Analog Devices is believed to be accurate and reliable. However, no responsibility is assumed by Analog Devices for its use, nor for any infringements of patents or other rights of third parties which may result from its use. No license is granted by implication or otherwise under any patent or patent rights of Analog Devices.

One Technology Way, P.O. Box 9106, Norwood, MA 02062-9106, U.S.A.
Tel: 617/329-4700 **Fax: 617/326-8703**

AD7224–SPECIFICATIONS

DUAL SUPPLY

(V_{DD} = 11.4 V to 16.5 V, V_{SS} = –5 V ± 10%; AGND = DGND = 0 V; V_{REF} = +2 V to (V_{DD} – 4 V)[1] unless otherwise noted. All specifications T_{MIN} to T_{MAX} unless otherwise noted.)

Parameter	K, B, T Versions[2]	L, C, U Versions[2]	Units	Conditions/Comments
STATIC PERFORMANCE				
Resolution	8	8	Bits	
Total Unadjusted Error	±2	±1	LSB max	V_{DD} = +15 V ± 5%, V_{REF} = +10 V
Relative Accuracy	±1	±1/2	LSB max	
Differential Nonlinearity	±1	±1	LSB max	Guaranteed Monotonic
Full-Scale Error	±3/2	±1	LSB max	
Full-Scale Temperature Coefficient	±20	±20	ppm/°C max	V_{DD} = 14 V to 16.5 V, V_{REF} = +10 V
Zero Code Error	±30	±20	mV max	
Zero Code Error Temperature Coefficient	±50	±30	µV/°C typ	
REFERENCE INPUT				
Voltage Range	2 to (V_{DD} – 4)	2 to (V_{DD} – 4)	V min to V max	
Input Resistance	8	8	kΩ min	
Input Capacitance[3]	100	100	pF max	Occurs when DAC is loaded with all 1s.
DIGITAL INPUTS				
Input High Voltage, V_{INH}	2.4	2.4	V min	
Input Low Voltage, V_{INL}	0.8	0.8	V max	
Input Leakage Current	±1	±1	µA max	V_{IN} = 0 V or V_{DD}
Input Capacitance[3]	8	8	pF max	
Input Coding	Binary	Binary		
DYNAMIC PERFORMANCE				
Voltage Output Slew Rate[3]	2.5	2.5	V/µs min	
Voltage Output Settling Time[3]				
Positive Full-Scale Change	5	5	µs max	V_{REF} = +10 V; Settling Time to ±1/2 LSB
Negative Full-Scale Change	7	7	µs max	V_{REF} = +10 V; Settling Time to ±1/2 LSB
Digital Feedthrough	50	50	nV secs typ	V_{REF} = 0 V
Minimum Load Resistance	2	2	kΩ min	V_{OUT} = +10 V
POWER SUPPLIES				
V_{DD} Range	11.4/16.5	11.4/16.5	V min/V max	For Specified Performance
V_{SS} Range	4.5/5.5	4.5/5.5	V min/V max	For Specified Performance
I_{DD}				
@ 25°C	4	4	mA max	Outputs Unloaded; V_{IN} = V_{INL} or V_{INH}
T_{MIN} to T_{MAX}	6	6	mA max	Outputs Unloaded; V_{IN} = V_{INL} or V_{INH}
I_{SS}				
@ 25°C	3	3	mA max	Outputs Unloaded; V_{IN} = V_{INL} or V_{INH}
T_{MIN} to T_{MAX}	5	5	mA max	Outputs Unloaded; V_{IN} = V_{INL} or V_{INH}
SWITCHING CHARACTERISTICS[3, 4]				
t_1				
@ 25°C	90	90	ns min	Chip Select/Load DAC Pulse Width
T_{MIN} to T_{MAX}	90	90	ns min	
t_2				
@ 25°C	90	90	ns min	Write/Reset Pulse Width
T_{MIN} to T_{MAX}	90	90	ns min	
t_3				
@ 25°C	0	0	ns min	Chip Select/Load DAC to Write Setup Time
T_{MIN} to T_{MAX}	0	0	ns min	
t_4				
@ 25°C	0	0	ns min	Chip Select/Load DAC to Write Hold Time
T_{MIN} to T_{MAX}	0	0	ns min	
t_5				
@ 25°C	90	90	ns min	Data Valid to Write Setup Time
T_{MIN} to T_{MAX}	90	90	ns min	
t_6				
@ 25°C	10	10	ns min	Data Valid to Write Hold Time
T_{MIN} to T_{MAX}	10	10	ns min	

NOTES
[1]Maximum possible reference voltage.
[2]Temperature ranges are as follows:
K, L Versions: –40°C to +85°C
B, C Versions: –40°C to +85°C
T, U Versions: –55°C to +125°C
[3]Sample Tested at 25°C by Product Assurance to ensure compliance.
[4]Switching characteristics apply for single and dual supply operation.

Specifications subject to change without notice.

SINGLE SUPPLY

(V_{DD} = +15 V ± 5%; V_{SS} = AGND = DGND = 0 V; V_{REF} = +10 V[1] unless otherwise noted. All specifications T_{MIN} to T_{MAX} unless otherwise noted.)

Parameter	K, B, T Versions[2]	L, C, U Versions[2]	Units	Conditions/Comments
STATIC PERFORMANCE				
Resolution	8	8	Bits	
Total Unadjusted Error	±2	±2	LSB max	
Differential Nonlinearity	±1	±1	LSB max	Guaranteed Monotonic
REFERENCE INPUT				
Input Resistance	8	8	kΩ min	
Input Capacitance[3]	100	100	pF max	Occurs when DAC is loaded with all 1s.
DIGITAL INPUTS				
Input High Voltage, V_{INH}	2.4	2.4	V min	
Input Low Voltage, V_{INL}	0.8	0.8	V max	
Input Leakage Current	±1	±1	µA max	V_{IN} = 0 V or V_{DD}
Input Capacitance[3]	8	8	pF max	
Input Coding	Binary	Binary		
DYNAMIC PERFORMANCE				
Voltage Output Slew Rate[4]	2	2	V/µs min	
Voltage Output Settling Time[4]				
Positive Full-Scale Change	5	5	µs max	Settling Time to ±1/2 LSB
Negative Full-Scale Change	20	20	µs max	Settling Time to ±1/2 LSB
Digital Feedthrough[3]	50	50	nV secs typ	V_{REF} = 0 V
Minimum Load Resistance	2	2	kΩ min	V_{OUT} = +10 V
POWER SUPPLIES				
V_{DD} Range	14.25/15.75	14.25/15.75	V min/V max	For Specified Performance
I_{DD}				
@ 25°C	4	4	mA max	Outputs Unloaded; V_{IN} = V_{INL} or V_{INH}
T_{MIN} to T_{MAX}	6	6	mA max	Outputs Unloaded; V_{IN} = V_{INL} or V_{INH}
SWITCHING CHARACTERISTICS[3, 4]				
t_1				
@ 25°C	90	90	ns min	Chip Select/Load DAC Pulse Width
T_{MIN} to T_{MAX}	90	90	ns min	
t_2				
@ 25°C	90	90	ns min	Write/Reset Pulse Width
T_{MIN} to T_{MAX}	90	90	ns min	
t_3				
@ 25°C	0	0	ns min	Chip Select/Load DAC to Write Setup Time
T_{MIN} to T_{MAX}	0	0	ns min	
t_4				
@ 25°C	0	0	ns min	Chip Select/Load DAC to Write Hold Time
T_{MIN} to T_{MAX}	0	0	ns min	
t_5				
@ 25°C	90	90	ns min	Data Valid to Write Setup Time
T_{MIN} to T_{MAX}	90	90	ns min	
t_6				
@ 25°C	10	10	ns min	Data Valid to Write Hold Time
T_{MIN} to T_{MAX}	10	10	ns min	

NOTES
[1]Maximum possible reference voltage.
[2]Temperature ranges are as follows:
AD7224KN, LN: 0°C to +70°C
AD7224BQ, CQ: –25°C to +85°C
AD7224TD, UD: –55°C to +125°C
[3]See Terminology.
[4]Sample tested at 25°C by Product Assurance to ensure compliance.

Specifications subject to change without notice.

ABSOLUTE MAXIMUM RATINGS[1]

V_{DD} to AGND . . . . . –0.3 V, +17 V
V_{DD} to DGND . . . . . –0.3 V, +17 V
V_{DD} to V_{SS} . . . . . –0.3 V, +24 V
AGND to DGND . . . . . –0.3 V, V_{DD}
Digital Input Voltage to DGND . . . . . –0.3 V, V_{DD} + 0.3 V
V_{REF} to AGND . . . . . –0.3 V, V_{DD} + 0.3 V
V_{OUT} to AGND[2] . . . . . V_{SS}, V_{DD}
Power Dissipation (Any Package) to +75°C . . . . . 450 mW
Derates above 75°C by . . . . . 6 mW/°C
Operating Temperature
Commercial (K, L Versions) . . . . . –40°C to +85°C
Industrial (B, C Versions) . . . . . –40°C to +85°C
Extended (T, U Versions) . . . . . –55°C to +125°C
Storage Temperature . . . . . –65°C to +150°C
Lead Temperature (Soldering, 10 secs) . . . . . +300°C

NOTES
[1]Stresses above those listed under "Absolute Maximum Ratings" may cause permanent damage to the device. This is a stress rating only and functional operation of the device at these or any other conditions above those indicated in the operational sections of this specification is not implied. Exposure to absolute maximum rating conditions for extended periods may affect device reliability.
[2]The outputs may be shorted to AGND provided that the power dissipation of the package is not exceeded. Typically short circuit current to AGND is 60 mA.

ORDERING GUIDE

Model[1]	Temperature Range	Total Unadjusted Error (LSB)	Package Option[2]
AD7224KN	–40°C to +85°C	±2 max	N-18
AD7224LN	–40°C to +85°C	±1 max	N-18
AD7224KP	–40°C to +85°C	±2 max	P-20A
AD7224LP	–40°C to +85°C	±1 max	P-20A
AD7224KR-1	–40°C to +85°C	±2 max	R-20
AD7224LR-1	–40°C to +85°C	±1 max	R-20
AD7224KR-18	–40°C to +85°C	±2 max	R-18
AD7224LR-18	–40°C to +85°C	±1 max	R-18
AD7224BQ	–40°C to +85°C	±2 max	Q-18
AD7224CQ	–40°C to +85°C	±1 max	Q-18
AD7224TQ	–55°C to +125°C	±2 max	Q-18
AD7224UQ	–55°C to +125°C	±1 max	Q-18
AD7224TE	–55°C to +125°C	±2 max	E-20A
AD7224UE	–55°C to +125°C	±1 max	E-20A

NOTES
[1]To order MIL-STD-883 processed parts, add /883B to part number. Contact your local sales office for military data sheet.
[2]E = Leadless Ceramic Chip Carrier; N = Plastic DIP; P = Plastic Leaded Chip Carrier; Q = Cerdip; R = SOIC.

CAUTION

ESD (electrostatic discharge) sensitive device. Electrostatic charges as high as 4000 V readily accumulate on the human body and test equipment and can discharge without detection. Although the AD7224 features proprietary ESD protection circuitry, permanent damage may occur on devices subjected to high energy electrostatic discharges. Therefore, proper ESD precautions are recommended to avoid performance degradation or loss of functionality.

PIN CONFIGURATIONS

DIP and SOIC

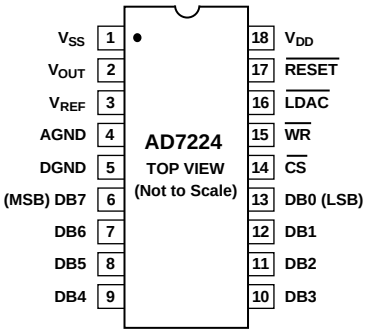

(SOIC)

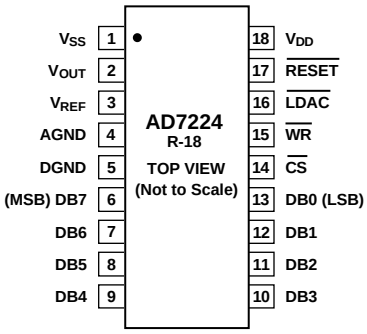

(SOIC)

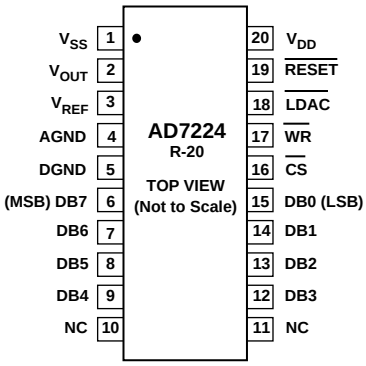

NC = NO CONNECT

LCCC

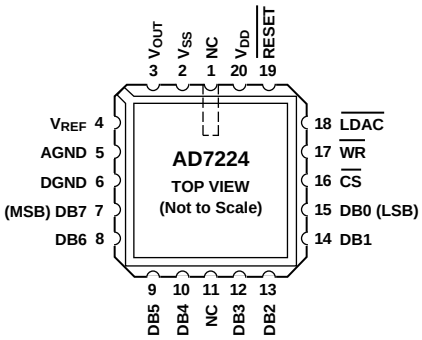

NC = NO CONNECT

PLCC

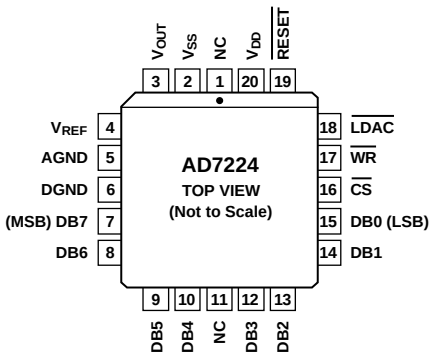

NC = NO CONNECT

TERMINOLOGY

TOTAL UNADJUSTED ERROR

Total Unadjusted Error is a comprehensive specification which includes full-scale error, relative accuracy and zero code error. Maximum output voltage is V_{REF} – 1 LSB (ideal), where 1 LSB (ideal) is V_{REF}/256. The LSB size will vary over the V_{REF} range. Hence the zero code error, relative to the LSB size, will increase as V_{REF} decreases. Accordingly, the total unadjusted error, which includes the zero code error, will also vary in terms of LSBs over the V_{REF} range. As a result, total unadjusted error is specified for a fixed reference voltage of +10 V.

RELATIVE ACCURACY

Relative Accuracy or endpoint nonlinearity is a measure of the maximum deviation from a straight line passing through the endpoints of the DAC transfer function. It is measured after allowing for zero code error and full-scale error and is normally expressed in LSBs or as a percentage of full-scale reading.

DIFFERENTIAL NONLINEARITY

Differential Nonlinearity is the difference between the measured change and the ideal 1 LSB change between any two adjacent codes. A specified differential nonlinearity of ±1 LSB max over the operating temperature range ensures monotonicity.

DIGITAL FEEDTHROUGH

Digital Feedthrough is the glitch impulse transferred to the output due to a change in the digital input code. It is specified in nV secs and is measured at V_{REF} = 0 V.

FULL-SCALE ERROR

Full-Scale Error is defined as:

Measured Value – Zero Code Error – Ideal Value

CIRCUIT INFORMATION

D/A SECTION

The AD7224 contains an 8-bit voltage-mode digital-to-analog converter. The output voltage from the converter has the same polarity as the reference voltage, allowing single supply operation. A novel DAC switch pair arrangement on the AD7224 allows a reference voltage range from +2 V to +12.5 V.

The DAC consists of a highly stable, thin-film, R-2R ladder and eight high speed NMOS single pole, double-throw switches. The simplified circuit diagram for this DAC is shown in Figure 1.

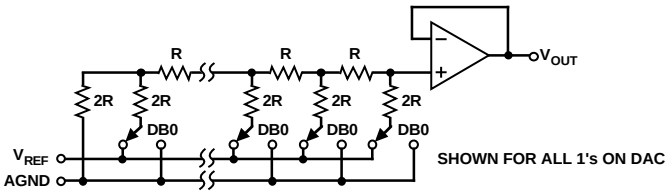

Figure 1. D/A Simplified Circuit Diagram

The input impedance at the V_{REF} pin is code dependent and can vary from 8 kΩ minimum to infinity. The lowest input impedance occurs when the DAC is loaded with the digital code 01010101. Therefore, it is important that the reference presents a low output impedance under changing load conditions. The nodal capacitance at the reference terminals is also code dependent and typically varies from 25 pF to 50 pF.

The V_{OUT} pin can be considered as a digitally programmable voltage source with an output voltage of:

$$V_{OUT} = D \bullet V_{REF}$$

where D is a fractional representation of the digital input code and can vary from 0 to 255/256.

OP-AMP SECTION

The voltage-mode D/A converter output is buffered by a unity gain noninverting CMOS amplifier. This buffer amplifier is capable of developing +10 V across a 2 kΩ load and can drive capacitive loads of 3300 pF.

The AD7224 can be operated single or dual supply resulting in different performance in some parameters from the output amplifier. In single supply operation (V_{SS} = 0 V = AGND) the sink capability of the amplifier, which is normally 400 µA, is reduced as the output voltage nears AGND. The full sink capability of 400 µA is maintained over the full output voltage range by tying V_{SS} to –5 V. This is indicated in Figure 2.

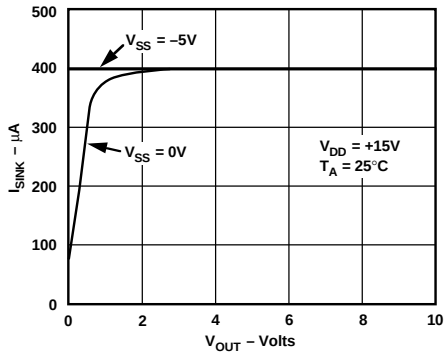

Figure 2. Variation of I_{SINK} with V_{OUT}

Settling-time for negative-going output signals approaching AGND is similarly affected by V_{SS}. Negative-going settling-time for single supply operation is longer than for dual supply operation. Positive-going settling-time is not affected by V_{SS}.

Additionally, the negative V_{SS} gives more headroom to the output amplifier which results in better zero code performance and improved slew-rate at the output, than can be obtained in the single supply mode.

DIGITAL SECTION

The AD7224 digital inputs are compatible with either TTL or 5 V CMOS levels. All logic inputs are static-protected MOS gates with typical input currents of less than 1 nA. Internal input protection is achieved by an on-chip distributed diode between DGND and each MOS gate. To minimize power supply currents, it is recommended that the digital input voltages be driven as close to the supply rails (V_{DD} and DGND) as practically possible.

INTERFACE LOGIC INFORMATION

Table I shows the truth table for AD7224 operation. The part contains two registers, an input register and a DAC register. $\overline{CS}$ and $\overline{WR}$ control the loading of the input register while $\overline{LDAC}$ and $\overline{WR}$ control the transfer of information from the input register to the DAC register. Only the data held in the DAC register will determine the analog output of the converter.

All control signals are level-triggered and therefore either or both registers may be made transparent; the input register by keeping $\overline{CS}$ and $\overline{WR}$ "LOW", the DAC register by keeping $\overline{LDAC}$ and $\overline{WR}$ "LOW". Input data is latched on the rising edge of $\overline{WR}$.

Table I. AD7224 Truth Table

$\overline{RESET}$	$\overline{LDAC}$	$\overline{WR}$	$\overline{CS}$	Function
H	L	L	L	Both Registers are Transparent
H	X	H	X	Both Registers are Latched
H	H	X	H	Both Registers are Latched
H	H	L	L	Input Register Transparent
H	H	↑	L	Input Register Latched
H	L	L	H	DAC Register Transparent
H	L	↑	H	DAC Register Latched
L	X	X	X	Both Registers Loaded With All Zeros
↑	H	H	H	Both Register Latched With All Zeros and Output Remains at Zero
↑	L	L	L	Both Registers are Transparent and Output Follows Input Data

H = High State, L = Low State, X = Don't Care.
All control inputs are level triggered.

The contents of both registers are reset by a low level on the $\overline{RESET}$ line. With both registers transparent, the $\overline{RESET}$ line functions like a zero override with the output brought to 0 V for the duration of the $\overline{RESET}$ pulse. If both registers are latched, a "LOW" pulse on $\overline{RESET}$ will latch all 0s into the registers and the output remains at 0 V after the $\overline{RESET}$ line has returned "HIGH". The $\overline{RESET}$ line can be used to ensure power-up to 0 V on the AD7224 output and is also useful, when used as a zero override, in system calibration cycles. Figure 3 shows the input control logic for the AD7224.

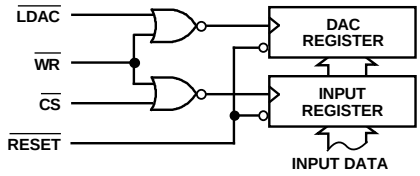

Figure 3. Input Control Logic

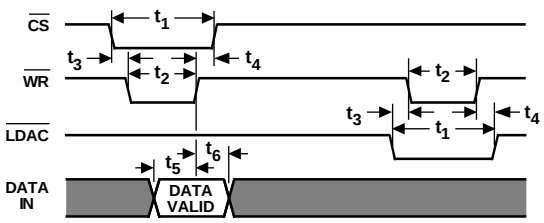

NOTES:
1. ALL INPUT SIGNAL RISE AND FALL TIMES MEASURED FROM 10% TO 90% OF V_{DD}. $t_r = t_f$ = 20ns OVER V_{DD} RANGE
2. TIMING MEASUREMENT REFERENCE LEVEL IS $\frac{V_{INH} + V_{INL}}{2}$

Figure 4. Write Cycle Timing Diagram

SPECIFICATION RANGES

For the DAC to maintain specified accuracy, the reference voltage must be at least 4 V below the V_{DD} power supply voltage. This voltage differential is required for correct generation of bias voltages for the DAC switches.

With dual supply operation, the AD7224 has an extended V_{DD} range from +12 V ± 5% to +15 V ± 10% (i.e., from +11.4 V to +16.5 V). Operation is also specified for a single V_{DD} power supply of +15 V ± 5%.

Performance is specified over a wide range of reference voltages from 2 V to (V_{DD} – 4 V) with dual supplies. This allows a range of standard reference generators to be used such as the AD580, a +2.5 V bandgap reference and the AD584, a precision +10 V reference. Note that in order to achieve an output voltage range of 0 V to +10 V, a nominal +15 V ± 5% power supply voltage is required by the AD7224.

GROUND MANAGEMENT

AC or transient voltages between AGND and DGND can cause noise at the analog output. This is especially true in microprocessor systems where digital noise is prevalent. The simplest method of ensuring that voltages at AGND and DGND are equal is to tie AGND and DGND together at the AD7224. In more complex systems where the AGND and DGND intertie is on the backplane, it is recommended that two diodes be connected in inverse parallel between the AD7224 AGND and DGND pins (IN914 or equivalent).

Applying the AD7224

UNIPOLAR OUTPUT OPERATION

This is the basic mode of operation for the AD7224, with the output voltage having the same positive polarity as V_{REF}. The AD7224 can be operated single supply (V_{SS} = AGND) or with positive/negative supplies (see op-amp section which outlines the advantages of having negative V_{SS}). Connections for the unipolar output operation are shown in Figure 5. The voltage at V_{REF} must never be negative with respect to DGND. Failure to observe this precaution may cause parasitic transistor action and possible device destruction. The code table for unipolar output operation is shown in Table II.

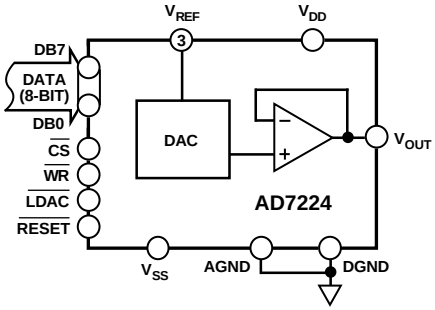

Figure 5. Unipolar Output Circuit

Table III. Unipolar Code Table

DAC Register Contents MSB	LSB	Analog Output
1 1 1 1	1 1 1 1	$+V_{REF}\left(\frac{255}{256}\right)$
1 0 0 0	0 0 0 1	$+V_{REF}\left(\frac{129}{256}\right)$
1 0 0 0	0 0 0 0	$+V_{REF}\left(\frac{128}{256}\right) = +\frac{V_{REF}}{2}$
0 1 1 1	1 1 1 1	$+V_{REF}\left(\frac{127}{256}\right)$
0 0 0 0	0 0 0 1	$+V_{REF}\left(\frac{1}{256}\right)$
0 0 0 0	0 0 0 0	*0 V*

Note: $1\ LSB = (V_{REF})(2^{-8}) = V_{REF}\left(\frac{1}{256}\right)$

BIPOLAR OUTPUT OPERATION

The AD7224 can be configured to provide bipolar output operation using one external amplifier and two resistors. Figure 6 shows a circuit used to implement offset binary coding. In this case

$$V_O = \left(1+\frac{R2}{R1}\right)\bullet\left(D\ \ V_{REF}\right)-\left(\frac{R2}{R1}\right)\bullet\left(V_{REF}\right)$$

With $R1 = R2$

$$V_O = (2\,D - 1)\bullet V_{REF}$$

where D is a fractional representation of the digital word in the DAC register.

Mismatch between R1 and R2 causes gain and offset errors; therefore, these resistors must match and track over temperature. Once again, the AD7224 can be operated in single supply or from positive/negative supplies. Table III shows the digital code versus output voltage relationship for the circuit of Figure 6 with R1 = R2.

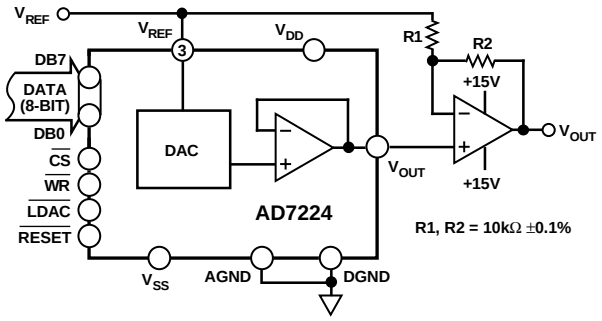

Figure 6. Bipolar Output Circuit

Table III. Bipolar (Offset Binary) Code Table

DAC Register Contents MSB	LSB	Analog Output
1 1 1 1	1 1 1 1	$+V_{REF}\left(\frac{127}{128}\right)$
1 0 0 0	0 0 0 1	$+V_{REF}\left(\frac{1}{128}\right)$
1 0 0 0	0 0 0 0	*0 V*
0 1 1 1	1 1 1 1	$-V_{REF}\left(\frac{1}{128}\right)$
0 0 0 0	0 0 0 1	$-V_{REF}\left(\frac{127}{128}\right)$
0 0 0 0	0 0 0 0	$-V_{REF}\left(\frac{128}{128}\right) = -V_{REF}$

AGND BIAS

The AD7224 AGND pin can be biased above system GND (AD7224 DGND) to provide an offset "zero" analog output voltage level. Figure 7 shows a circuit configuration to achieve this. The output voltage, V_{OUT}, is expressed as:

$$V_{OUT} = V_{BIAS} + D \cdot (V_{IN})$$

where D is a fractional representation of the digital word in DAC register and can vary from 0 to 255/256.

For a given V_{IN}, increasing AGND above system GND will reduce the effective V_{DD}–V_{REF} which must be at least 4 V to ensure specified operation. Note that V_{DD} and V_{SS} for the AD7224 must be referenced to DGND.

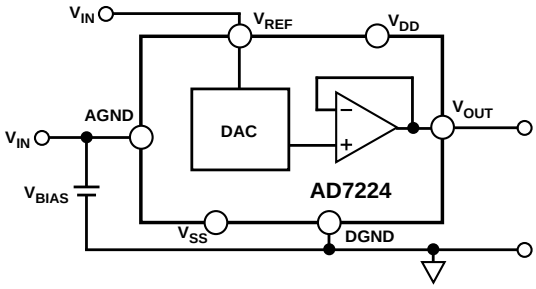

Figure 7. AGND Bias Circuit

MICROPROCESSOR INTERFACE

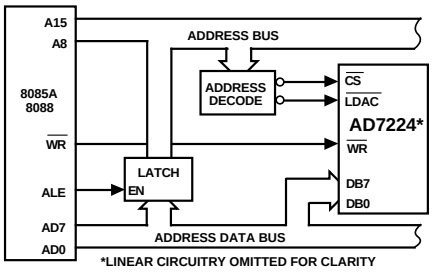

Figure 8. AD7224 to 8085A/8088 Interface

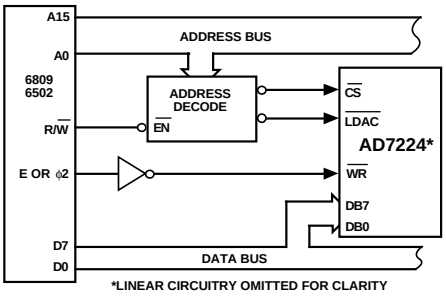

Figure 9. AD7224 to 6809/6502 Interface

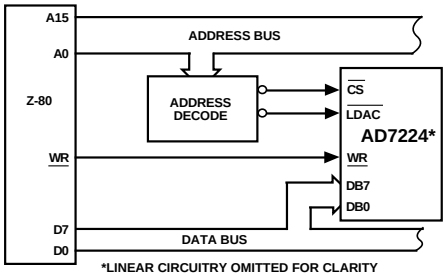

Figure 10. AD7224 to Z-80 Interface

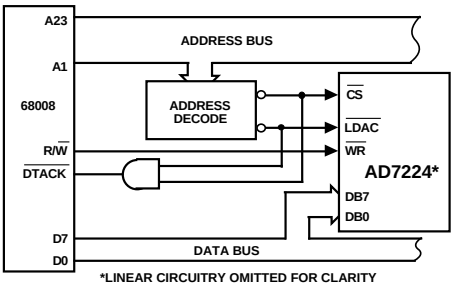

Figure 11. AD7224 to 68008 Interface

OUTLINE DIMENSIONS

Dimensions shown in inches and (mm).

18-Pin Plastic (Suffix N)

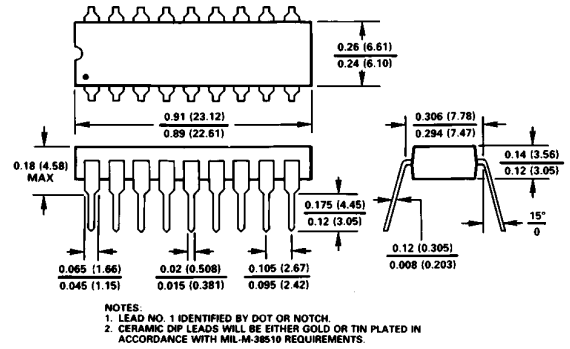

18-Pin Cerdip (Suffix Q)

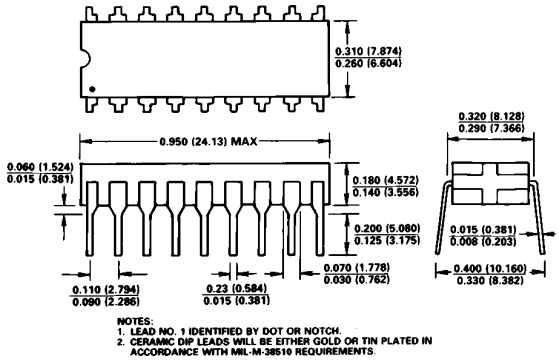

18-Pin Ceramic (Suffix D)

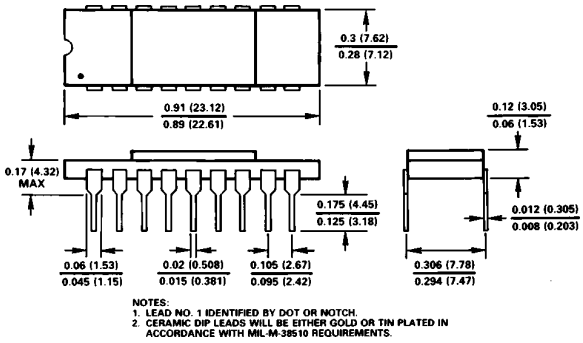

18-Lead SOIC (R-18)

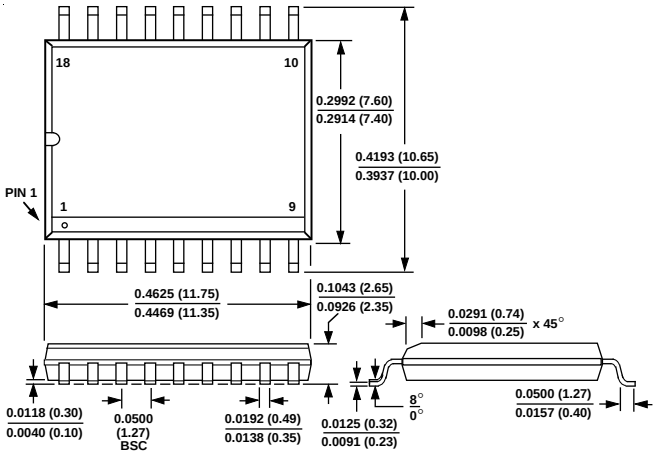

PLCC Package P-20A

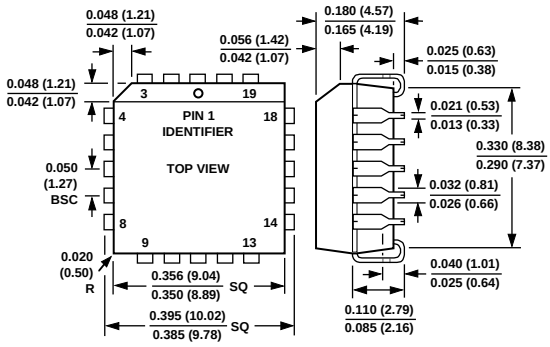

20-Lead SOIC (R-20)

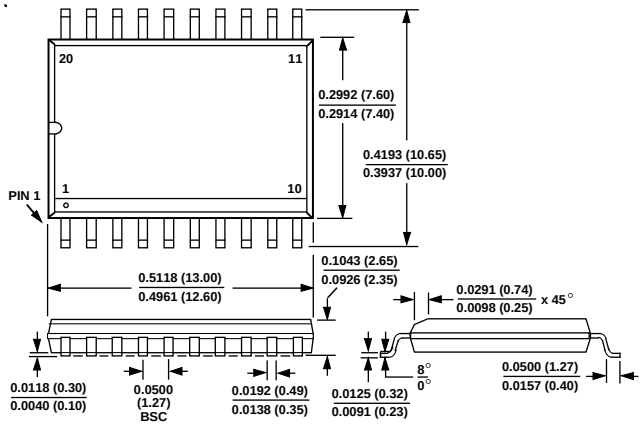

LCCC Package E-20A

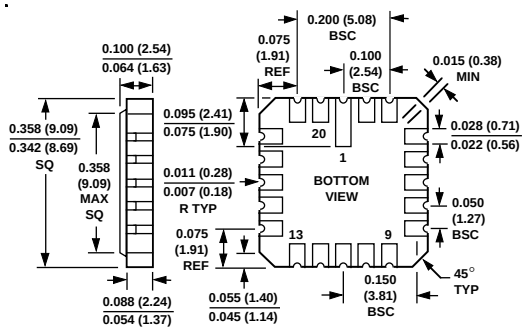

C836a–10–10/84

PRINTED IN U.S.A.