8-, 10-, 12-Bit Video Speed Hybrid Current & Voltage Out D/A Converter

HDS-0820, -1025, -1250/HDH-0802, -1003, -1205

FEATURES

- 25ns Current Settling to 0.1% (HDS)
- 200ns Voltage Settling to 0.1% (HDH)
- 10mA Current Out (HDS)
- Guaranteed Monotonicity Over Temperature
- No External Parts Required
- Reliable Hybrid Construction

APPLICATIONS

- CRT Vector Displays
- TV Video Reconstruction
- Military Equipment (MIL-STD-883)
- Analytical and Medical Instruments

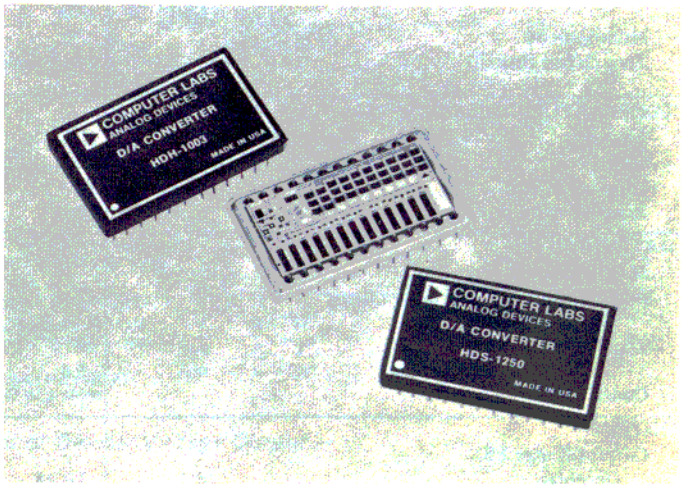

GENERAL DESCRIPTION

The HDS/HDH series of digital to analog converters represent the fastest precision settling current and voltage DAC's available. Capable of processing to MIL-STD-883 and guaranteed monotonicity over their operating temperature range; their quiescent power is 1/2 that of competitive units. The current output models provide 10mA full scale allowing direct drive of capacitive loads and transmission lines. All versions have a precision reference and are active laser trimmed to specified accuracy, thus no external adjustment pots or other components are required.

With 6 available units engineering trade-offs can be made between resolution, speed, current or voltage output, and of course price. To facilitate this comparison major specifications are summarized in Table 1.

Model	Resolution	Full Scale Step Settling Time
Current Output		10mA Step
HDS-0820	8 Bits	20ns to 0.4%
HDS-1025	10 Bits	25ns to 0.1%
HDS-1250	12 Bits	35ns to 0.025%
Voltage Output		10V Step
HDH-0802	8 Bits	200ns to 0.4%
HDH-1003	10 Bits	300ns to 0.1%
HDH-1205	12 Bits	500ns to 0.125%

Table 1.

Other general specifications that apply to all devices include TTL logic; glass or hermetic metal package; unipolar or bipolar operation with internal offsetting reference.

The HDH voltage output devices provide access to the op amp summing point so that reduced full scale output voltage swing can be provided. Such operation with an external resistor shunting the internal 1k resistor will reduce the already low op amp offset drift.

Information furnished by Analog Devices is believed to be accurate and reliable. However, no responsibility is assumed by Analog Devices for its use; nor for any infringements of patents or other rights of third parties which may result from its use. No license is granted by implication or otherwise under any patent or patent rights of Analog Devices.

Route 1 Industrial Park; P.O. Box 280; Norwood, Mass. 02062
Tel: 617/329-4700 TWX: 710/394-6577
West Coast 714/842-1717
Mid-West 312/894-3300
Texas 214/231-5094

SPECIFICATIONS (typical @ +25°C with nominal power supply voltages unless otherwise noted)

MODEL	UNITS	CURRENT OUT HDS-0820	HDS-1025	HDS-1250	VOLTAGE OUT HDH-0802	HDH-1003	HDH-1205
RESOLUTION FS = Full Scale	Bits	8	10	12	8	10	12
LSB WEIGHT		40μA	10μA	2.5μA	40mV	10mV	2.5mV
ACCURACY (Relative to FS Including Linearity)	±% FS	0.1	0.05	0.0125	0.1	0.05	0.0125
Linearity		±10μA	±5μA	±1.25μA	±10mV	±5mV	±1.25mV
	LSB	±1/4	±1/2	±1/2	±1/4	±1/2	±1/2
Monotonicity		Guaranteed Over Operating Temperature Range					
Zero Offset (Initial)		15nA max	*	*	10mV typ 50mV max	*	*
TEMPERATURE COEFFICIENTS							
Linearity	ppm/°C	3	*	*	*	*	*
Gain	ppm/°C	30	*	*	*	*	*
Unipolar Offset	ppm/°C	3	*	*	*	*	*
Bipolar Offset	ppm/°C	15	*	*	*	*	*
DATA INPUTS							
Logic Compatibility		TTL and 5V CMOS					
Logic Voltage Levels Positive Logic "1" =	V	+2 to +7	*	*	*	*	*
"0" =	V	0 to +0.8	*	*	*	*	*
Logic Loading (Each Bit) "1" =	μA	40	*	*	*	*	*
"0" =	mA	−2.6	*	*	*	*	*
Codes		BIN, OBN			BIN,OBN		
OUTPUT							
Current Range FS							
Unipolar	mA	+10.24	*	+10.24 ±0.05%	±25 max	**	**
Bipolar	mA	±5.12	*	±5.12 ±0.025%	±25 max	**	**
Voltage Out FS[1,2]							
Unipolar HDS with 200Ω Internal Connected R_L	V	+1.024	*	+1.024 ±0.05%	−10.24 ±0.1%	**	**
Bipolar	V	±0.512	*	±0.512 ±0.025%	∓5.12 ±0.05%	**	**
Compliance	V	+1.5, −2	*	*	N/A	**	**
Impedance, Internal (See Figure 1)	Ω	200	*	*	0.1 max	**	**
SETTLING TIME							
Current	ns to % FS	20 to 0.4	25 to 0.1	35 to 0.025	N/A	N/A	N/A
Voltage[2]							
Unipolar or Bipolar Out, 75Ω Load, 0.56V p-p	ns to % FS	30 to 0.4	35 to 0.1	50 to 0.025	N/A	N/A	N/A
Unipolar or Bipolar Out, Internal 200Ω Load, 1.024V p-p	ns to % FS	45 to 0.4	50 to 0.1	60 to 0.025	N/A	N/A	N/A
10V Output Step	ns to % FS	N/A	N/A	N/A	200 to 0.4	300 to 0.1	500 to 0.025
5V Output Step	ns to % FS	N/A	N/A	N/A	150 to 0.4	200 to 0.1	350 to 0.025
POWER REQUIREMENTS							
+14.5V to +15.5V	mA max	42	*	50	70	**	**
−12V to −16V	mA max	14	*	15	40	**	**
Power Supply Rejection Ratio	%/V	0.2	*	*	*	*	*
TEMPERATURE RANGE							
Operating – Glass Package	°C	0 to +70	*	*	*	*	*
Operating – "M" Metal Case[3]	°C	−55 to +125	*	*	*	*	*
Storage	°C	−55 to +125	*	*	*	*	*
PRICE							
(1-9)	$	109	119	149	185	195	205

NOTES:

[1] Other voltages may be obtained with external resistor.

[2] For HDS series, $V_{OUT} = I_{OUT} \times R_{equivalent}$ which is the value of the 200Ω internal impedance in parallel with the external load resistance. Thus, by correct selection of external R1 V_{OUT} can be any magnitude up to the + or − compliance voltage. See Figures 1 and 2.

[3] Contact factory or local Analog Devices sales office for "M" Metal Case device specifications and prices.

*Specifications same as HDS-0820.

**Specifications same as HDH-0802.

Specifications subject to change without notice.

OUTLINE DIMENSIONS

Dimensions shown in inches and (mm).

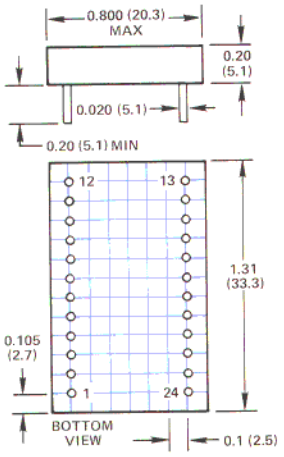

DOT ON TOP INDICATES POSITION OF PIN 1

PINS ARE GOLD PLATED.

GLASS PACKAGE

OUTLINE DIMENSIONS

Dimensions shown in inches and (mm).

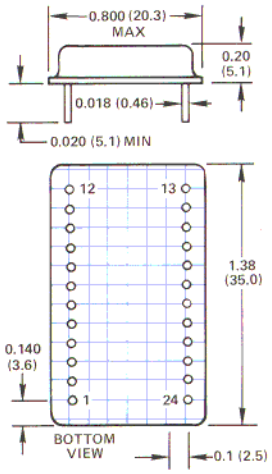

DOT ON TOP INDICATES POSITION OF PIN 1

METAL PACKAGE - M VERSION

PIN DESIGNATIONS HDS-0820, HDS-1025

PIN	FUNCTION
1	+15V
2, 3	BIT 1 (MSB)
4	BIT 2
5	BIT 3
6	BIT 4
7	BIT 5
8	BIT 6
9	BIT 7
10	BIT 8
11	BIT 9 (HDS-1025)
12	BIT 10
13-20	GND
21	OUTPUT
22	R_L 200Ω
23	BIPOLAR OFFSET
24	-15V

PIN DESIGNATIONS HDS-1250

PIN	FUNCTION
1	BIT 1 (MSB)
2	BIT 2
3	BIT 3
4	BIT 4
5	BIT 5
6	BIT 6
7	BIT 7
8	BIT 8
9	BIT 9
10	BIT 10
11	BIT 11
12	BIT 12
13-19	GND
20	OUTPUT
21	R_L 200Ω
22	BIPOLAR OFFSET
23	-15V
24	+15V

PIN DESIGNATIONS HDH SERIES

PIN	FUNCTION
1	BIT 1 (MSB)
2	BIT 2
3	BIT 3
4	BIT 4
5	BIT 5
6	BIT 6
7	BIT 7
8	BIT 8
9	BIT 9
10	BIT 10
11	BIT 11
12	BIT 12
13-19	GROUND
20	SUM NODE
21	OUTPUT
22	BIPOLAR OFFSET
23	-15V
24	+15V

ON HDH-0802 DEVICES, GROUND PINS 9, 10, 11 AND 12.
ON HDH-1003 DEVICES, GROUND PINS 11 AND 12.

Analog Output, ±5.12mA	Offset Binary
+5.11mA (1LSB)	1 1 1 1
+2.56mA	1 1 0 0
0mA	1 0 0 0
-2.56mA	0 1 0 0
-5.12mA	0 0 0 0
Analog Output, 0 to +10.24mA	**Straight Binary**
+10.23mA	1 1 1 1
+7.68mA	1 1 0 0
+5.12mA	1 0 0 0
+2.56mA	0 1 0 0
0mA	0 0 0 0

Table 2. Coding HDS Series

Analog Output, ±5.12V	Complement Offset Binary
-5.1175V	1 1 1 1
-2.56V	1 1 0 0
0V	1 0 0 0
+2.56V	0 1 0 0
+5.12V	0 0 0 0
Analog Output, 0 to +10.24V	**Complement Binary**
-10.2375V	1 1 1 1
-7.68V	1 1 0 0
-5.12V	1 0 0 0
-2.56V	0 1 0 0
0V	0 0 0 0

Table 3. Coding HDH Series

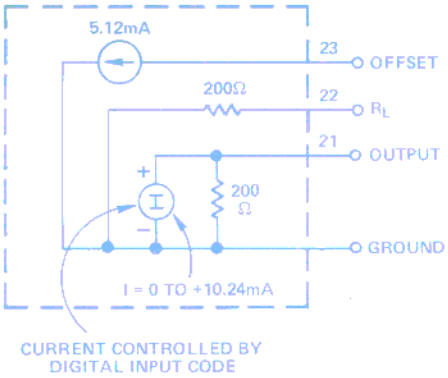

Figure 1. HDS Current Equivalent Circuit

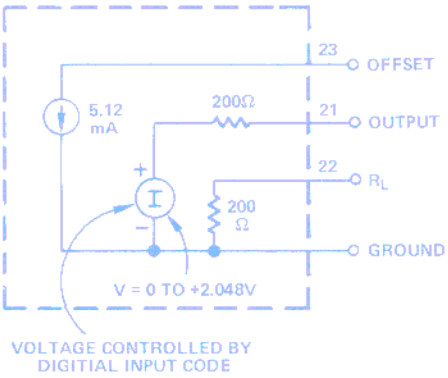

Figure 2. HDS Voltage Equivalent Circuit

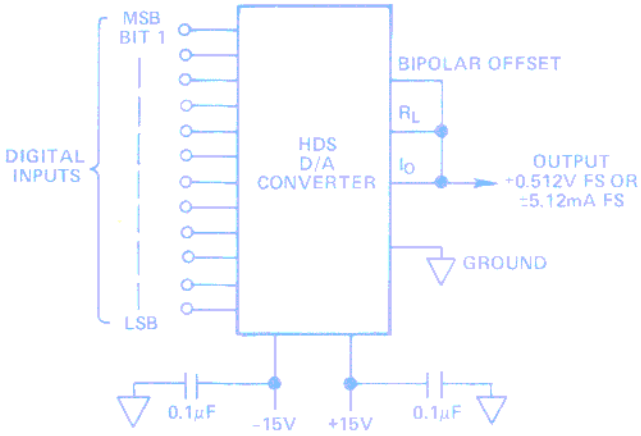

Figure 3. Bipolar Current Output

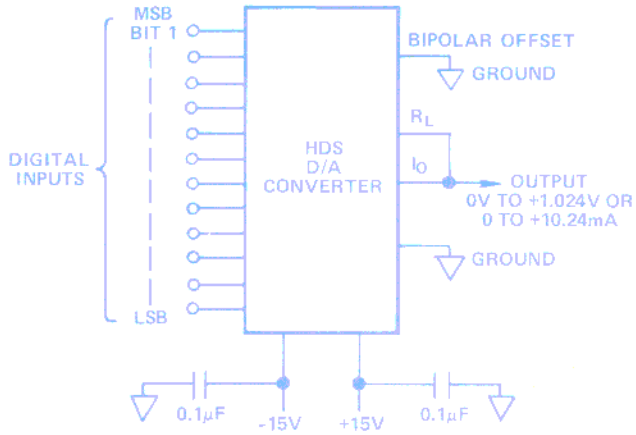

Figure 4. Unipolar Current Output

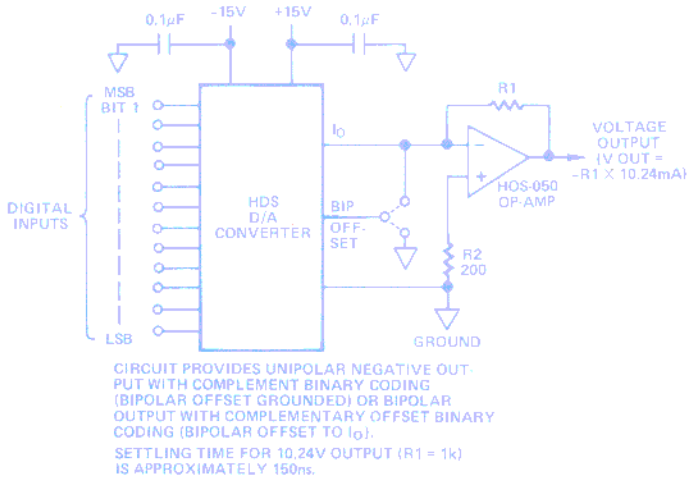

Figure 5. Inverting Unipolar or Bipolar Voltage Output

ORDERING INFORMATION

Order model number HDS-0820, HDS-1025, HDS-1250, HDH-0802, HDH-1003, HDH-1205. Models with extended operating temperature range, hermetically-sealed metal-case construction (M versions) and MIL-STD-883 processing are also available. Consult factory or local Analog Devices sales office for further information.

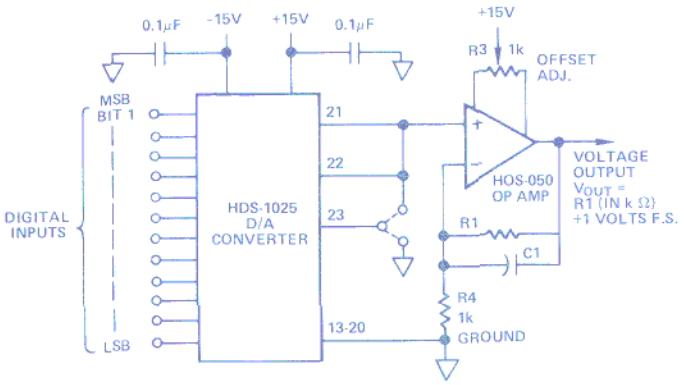

NOTES:

1. CIRCUIT SHOWN FOR UNIPOLAR POSITIVE OUTPUT. OUTPUT SETTING TIME IS APPROXIMATELY 150ns.
2. FOR 0 to +10V OUTPUT, R1 = 9kΩ.
3. R3 IS ADJUSTED TO COMPENSATE OP-AMP OFFSET.
4. FOR UNIPOLAR OUTPUT, GROUND PIN 23. FOR BIPOLAR OUTPUT, SHORT PIN 23 TO PIN 21 AND UNGROUND PIN 23.
5. C1 IS APPROXIMATELY 10pF AND MAY BE ADJUSTED FOR BEST TRANSIENT RESPONSE.

Figure 6. Noninverting Unipolar or Bipolar Voltage Output — HDS-1025

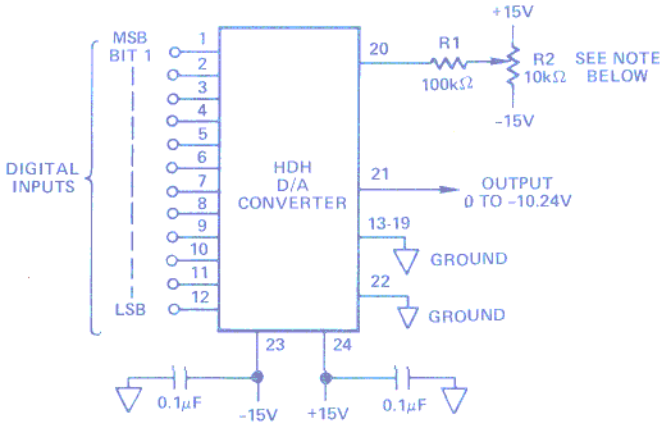

NOTE: R1 and R2 ARE OPTIONAL AND USED ONLY WHEN PRECISE ZEROING OF THE OUTPUT (<10mV) IS REQUIRED.

Figure 7. Unipolar Negative Output

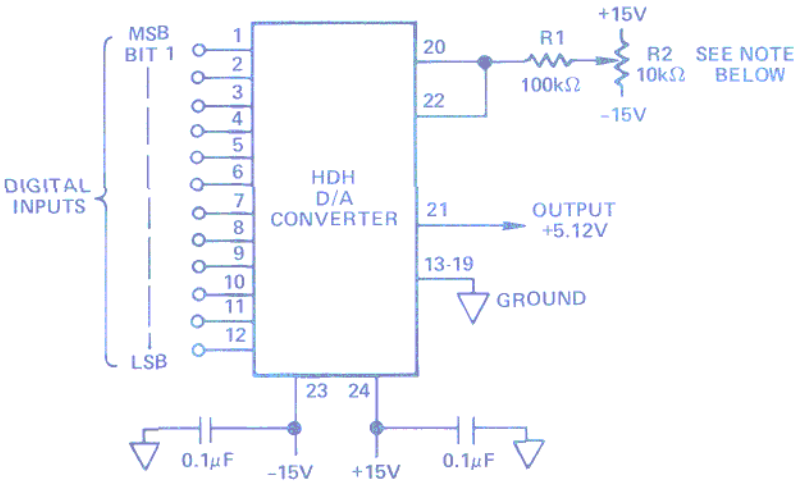

NOTE: R1 AND R2 ARE OPTIONAL AND USED ONLY WHEN PRECISE ZEROING OF THE OUTPUT (<10mV) IS REQUIRED.

Figure 8. Bipolar Output

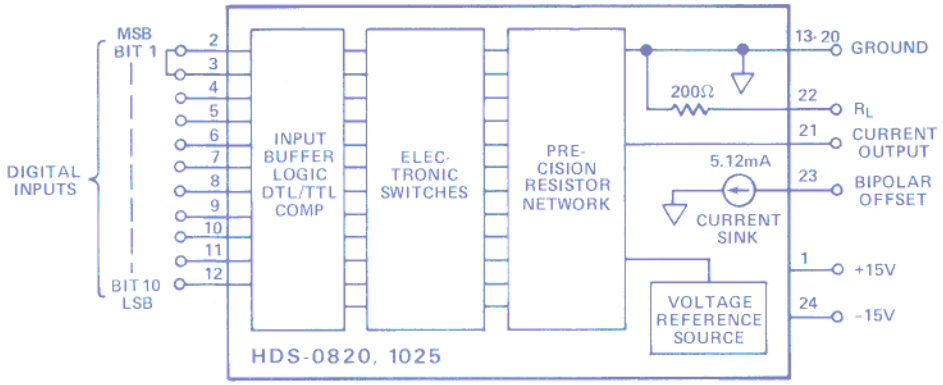

NOTE: ON 8-BIT VERSIONS, PINS 11 AND 12 ARE NOT CONNECTED INTERNALLY, AND PIN 10 IS LSB.

Block Diagram — HDS-0820 and HDS-1025

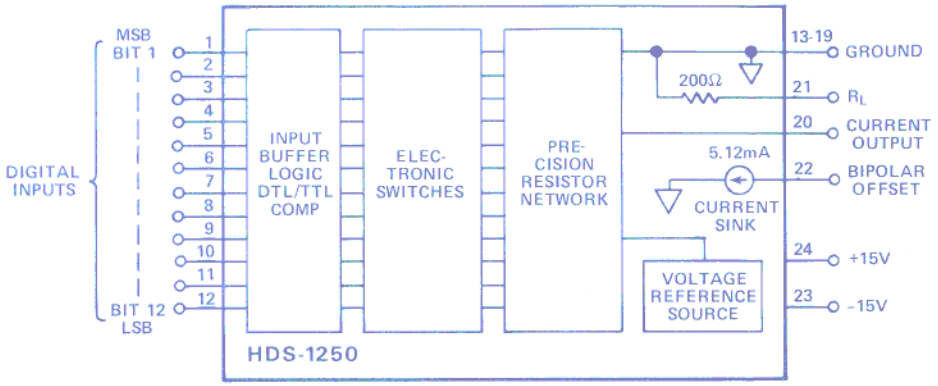

Block Diagram — HDS-1250

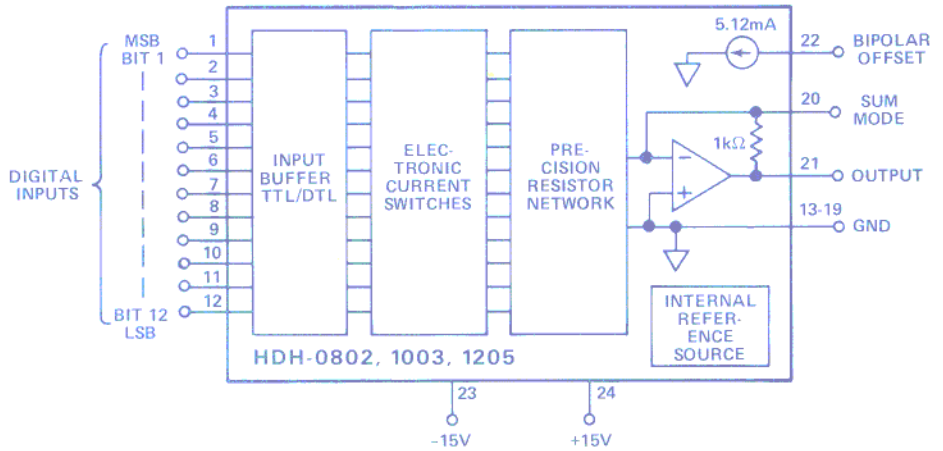

NOTE: ON HDH-0802 DEVICES, GROUND PINS 9, 10, 11 AND 12.
ON HDH-1003 DEVICES, GROUND PINS 11 AND 12.

Block Diagram — HDH-0802, HDH-1003 and HDH-1205

C535—13—8/79

PRINTED IN U.S.A.