ANALOG DEVICES

Dual Matched Instrumentation Operational Amplifier

OP-10

FEATURES

- **Extremely Tight Matching**
- **Excellent Individual Amplifier Parameters**
- **Offset Voltage Match** ..... **0.18mV Max**
- **Offset Voltage Match vs Temp.** ..... **0.8μV/°C Max**
- **Common-Mode Rejection Match** ..... **114dB Min**
- **Power Supply Rejection Match** ..... **100dB Min**
- **Bias Current Match** ..... **3.0nA Max**
- **Low Noise** ..... **0.6μV_{p-p} Max**
- **Low Bias Current** ..... **3.0nA Max**
- **High Common-Mode Input Impedance** .... **200GΩ Typ**
- **Excellent Channel Separation** ..... **126dB Min**

ORDERING INFORMATION†

T_A = 25°C V_{OS} MAX (mV)	HERMETIC DIP 14-PIN	OPERATING TEMPERATURE RANGE
0.5	OP10AY*	MIL
0.5	OP10EY	COM
0.5	OP10Y*	MIL
0.5	OP10CY	COM

* For devices processed in total compliance to MIL-STD-883, add /883 after part number. Consult factory for 883 data sheet.

† Burn-in is available on commercial and industrial temperature range parts in CerDIP, plastic DIP, and TO-can packages.

GENERAL DESCRIPTION

The OP-10 series of dual-matched instrumentation operational amplifiers consists of two independent monolithic high-performance operational amplifiers in a single 14-pin dual-in-line package. Tight matching of critical parameters is provided between channels of the dual operational amplifier.

The excellent specifications of the individual amplifiers and tight matching over temperature enable construction of high-performance instrumentation amplifiers. The designer can achieve the guaranteed specifications because the common package eliminates temperature differentials which occur in designs using separately housed amplifiers.

Matching between channels is provided on all critical parameters including offset voltage, tracking of offset voltage vs. temperature, noninverting bias currents, and common-mode and power-supply rejection ratios. The individual amplifiers feature extremely low offset voltage, offset voltage drift, low noise voltage, low bias current, internal compensation and input/output protection.

PIN CONNECTIONS

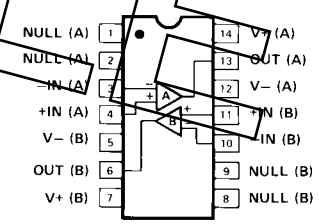

14-PIN CERAMIC DIP (Y-Suffix)

NOTE:
Device may be operated even if insertion is reversed; this is due to inherent symmetry of pin locations of amplifiers A and B.

SIMPLIFIED SCHEMATIC (1/2 OP-10)

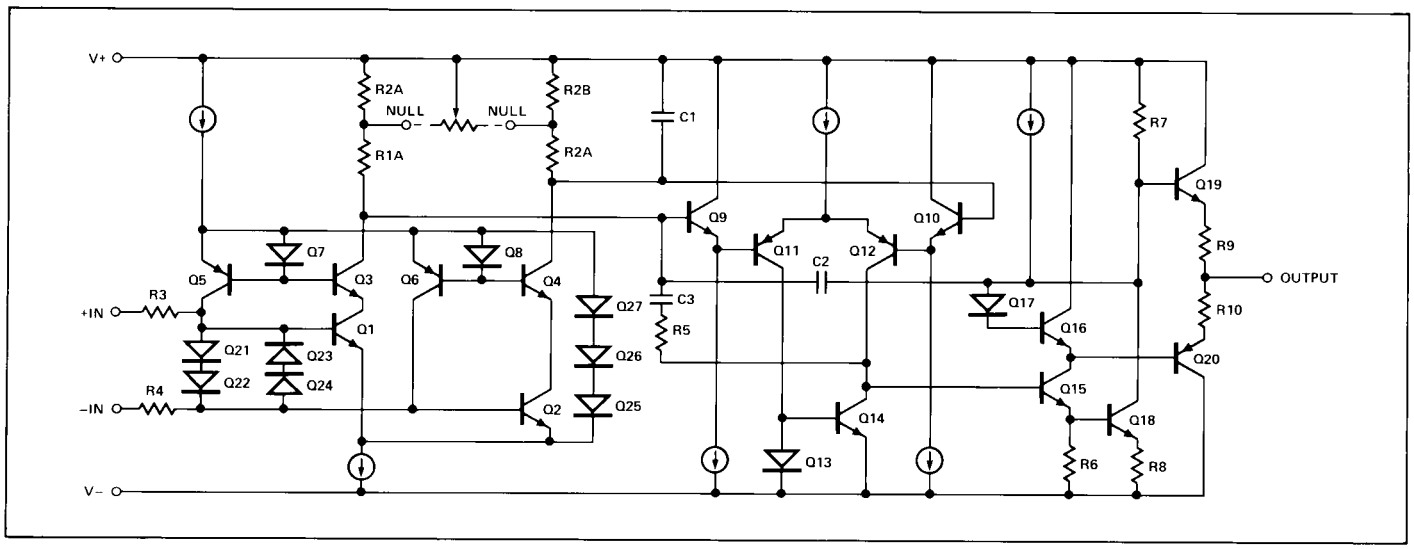

OP-10

ABSOLUTE MAXIMUM RATINGS

Supply Voltage ..... ±22V
Differential Input Voltage ..... ±30V
Input Voltage (Note 1) ..... ±22V
Output Short-Circuit Duration ..... Indefinite
Storage Temperature Range ..... –65°C to +150°C
Operating Temperature Range
OP-10A, OP-10 ..... –55°C to +125°C
OP-10E, OP-10C ..... 0°C to +70°C

DICE Junction Temperature (T_j) ..... –65°C to +150°C
Lead Temperature Range (Soldering, 60 sec) ..... +300°C

PACKAGE TYPE	Θ_{jA} (NOTE 2)	Θ_{jC}	UNITS
14-Pin Hermetic DIP (Y)	108	16	°C/W

NOTES:
1. For supply voltages less than +22V, the absolute maximum input voltage is equal to the supply voltage.
2. Θ_{jA} is specified for worst case mounting conditions, i.e., Θ_{jA} is specified for device in socket for CerDIP package.

INDIVIDUAL AMPLIFIER CHARACTERISTICS at $V_S = \pm 15V$, $T_A = 25°C$, unless otherwise noted.

PARAMETER	SYMBOL	CONDITIONS	OP-10A MIN	OP-10A TYP	OP-10A MAX	OP-10 MIN	OP-10 TYP	OP-10 MAX	UNITS
Input Offset Voltage	V_{OS}		—	0.2	0.5	—	0.2	0.5	mV
Long-Term Input Offset Voltage Stability	$\Delta V_{OS}/Time$	(Notes 1, 2)	—	0.25	1.0	—	0.25	1.0	μV/Mo
Input Offset Current	I_{OS}		—	1.0	2.8	—	1.0	2.8	nA
Input Bias Current	I_B		—	±1	±3	—	±1	±3	nA
Input Noise Voltage	e_{np-p}	(Note 2) 0.1Hz to 10Hz	—	0.35	0.6	—	0.35	0.6	μV_{p-p}
Input Noise Voltage Density	e_n	$f_O = 10Hz$	—	10.3	18.0	—	10.3	18.0	$nV/\sqrt{Hz}$
		(Note 2) $f_O = 100Hz$	—	10.0	13.0	—	10.0	13.0	
		$f_O = 1000Hz$	—	9.6	11.0	—	9.6	11.0	
Input Noise Current	i_{np-p}	(Note 2) 0.1Hz to 10Hz	—	14	30	—	14	30	pA_{p-p}
Input Noise Current Density	i_n	$f_O = 10Hz$	—	0.32	0.80	—	0.32	0.80	$pA/\sqrt{Hz}$
		(Note 2) $f_O = 100Hz$	—	0.14	0.23	—	0.14	0.23	
		$f_O = 1000Hz$	—	0.12	0.17	—	0.12	0.17	
Input Resistance — Differential-Mode	R_{IN}	(Note 3)	20	60	—	20	60	—	MΩ
Input Resistance — Common-Mode	R_{INCM}		—	200	—	—	200	—	GΩ
Input Voltage Range	IVR		±13	±14	—	±13	±14	—	V
Common-Mode Rejection Ratio	CMRR	$V_{CM} = \pm 13V$	110	126	—	110	126	—	dB
Power Supply Rejection Ratio	PSRR	$V_S = \pm 3V$ to $\pm 18V$	—	4	10	—	4	10	μV/V
Large-Signal Voltage Gain	A_{VO}	$R_L \geq 2k\Omega$, $V_O = \pm 10V$	200	500	—	200	500	—	V/mV
		$R_L \geq 500\Omega$, $V_O = \pm 0.5V$, $V_S = \pm 3V$ (Note 3)	150	500	—	150	500	—	
Output Voltage Swing	V_O	$R_L \geq 10k\Omega$	±12.5	±13.0	—	±12.5	±13.0	—	V
		$R_L \geq 2k\Omega$	±12.0	±12.8	—	±12.0	±12.8	—	
		$R_L \geq 1k\Omega$	±10.5	±12.0	—	±10.5	±12.0	—	
Slew Rate	SR	$R_L \geq 2k\Omega$	—	0.17	—	—	0.17	—	V/μs
Closed-Loop Bandwidth	BW	$A_{VCL} = +1.0$	—	0.6	—	—	0.6	—	MHz
Open-Loop Output Resistance	R_O	$V_O = 0$, $I_O = 0$	—	60	—	—	60	—	Ω
Power Consumption	P_d	Each Amplifier	—	90	120	—	90	120	mW
		$V_S = \pm 3V$	—	4	6	—	4	6	
Offset Adjustment Range		$R_P = 20k\Omega$	—	±4	—	—	±4	—	mV
Input Capacitance	C_{IN}		—	8	—	—	8	—	pF

NOTES:
1. Long-Term Input Offset Voltage Stability refers to the averaged trend line of V_{OS} vs. Time over extended periods after the first 30 days of operation. Excluding the initial hour of operation, changes in V_{OS} during the first 30 operating days are typically 2.5μV — refer to typical performance curves.
2. Sample tested.
3. Guaranteed by design.

OBSOLETE

INDIVIDUAL AMPLIFIER CHARACTERISTICS at $V_S = \pm 15V$, $-55°C \leq T_A \leq +125°C$, unless otherwise noted.

PARAMETER	SYMBOL	CONDITIONS	OP-10A MIN	OP-10A TYP	OP-10A MAX	OP-10 MIN	OP-10 TYP	OP-10 MAX	UNITS
Input Offset Voltage	V_{OS}		—	0.3	0.7	—	0.3	0.7	mV
Average Input Offset Voltage Drift Without External Trim	TCV_{OS}	(Note 2)	—	0.7	2.0	—	0.7	2.0	μV/°C
With External Trim	TCV_{OSn}	$R_P = 20k\Omega$ (Note 3)	—	0.3	1.0	—	0.3	1.0	μV/°C
Input Offset Current	I_{OS}		—	1.8	5.6	—	1.8	5.6	nA
Average Input Offset Current Drift	TCI_{OS}	(Note 2)	—	8	50	—	8	50	pA/°C
Input Bias Current	I_B		—	±2	±6	—	±2	±6	nA
Average Input Bias Current Drift	TCI_B	(Note 2)	—	13	50	—	13	50	pA/°C
Input Voltage Range	IVR		±13.0	±13.5	—	±13.0	±13.5	—	V
Common-Mode Rejection Ratio	CMRR	$V_{CM} = \pm 13V$	106	123	—	106	123	—	dB
Power Supply Rejection Ratio	PSRR	$V_S = \pm 3V$ to $\pm 18V$	—	5	20	—	5	20	μV/V
Large-Signal Voltage Gain	A_{VO}	$R_L \geq 2k\Omega$, $V_O = \pm 10V$	150	400	—	150	400	—	V/mV
Output Voltage Swing	V_O	$R_L \geq 2k\Omega$	±12.0	±12.6	—	±12.0	±12.6	—	V

MATCHING CHARACTERISTICS at $V_S = \pm 15V$, $T_A = 25°C$, unless otherwise noted.

PARAMETER	SYMBOL	CONDITIONS	OP-10A MIN	OP-10A TYP	OP-10A MAX	OP-10 MIN	OP-10 TYP	OP-10 MAX	UNITS
Input Offset Voltage	ΔV_{OS}		—	0.07	0.18	—	0.12	0.5	mV
Average Noninverting Bias Current	I_B+		—	±1.0	±3.0	—	±1.3	±4.5	nA
Noninverting Offset Current	$I_{OS}+$		—	0.8	2.8	—	1.1	4.5	nA
Inverting Offset Current	$I_{OS}-$		—	0.8	2.8	—	1.1	4.5	nA
Common-Mode Rejection Ratio Match	ΔCMRR	$V_{CM} = \pm 13V$	114	123	—	106	120	—	dB
Power Supply Rejection Ratio Match	ΔPSRR	$V_S = \pm 3V$ to $\pm 18V$	—	3	10	—	4	20	μV/V
Channel Separation	CS	(Note 2)	126	140	—	126	140	—	dB

MATCHING CHARACTERISTICS at $V_S = \pm 15V$, $-55°C \leq T_A \leq +125°C$, unless otherwise noted.

PARAMETER	SYMBOL	CONDITIONS	OP-10A MIN	OP-10A TYP	OP-10A MAX	OP-10 MIN	OP-10 TYP	OP-10 MAX	UNITS
Input Offset Voltage Match	ΔV_{OS}		—	0.1	0.3	—	0.2	0.9	mV
Input Offset Voltage Tracking Without External Trim	$TC\Delta V_{OS}$	(Note 2)	—	0.45	1.3	—	0.9	2.5	μV/°C
With External Trim	$TC\Delta V_{OSn}$	$R_P = 20k\Omega$ (Note 3) Channel A only	—	0.3	0.8	—	0.4	1.2	μV/°C

NOTES:

1. Long-Term Input Offset Voltage Stability refers to the averaged trend line of V_{OS} vs. Time over extended periods after the first 30 days of operation. Excluding the initial hour of operation, changes in V_{OS} during the first 30 operating days are typically 2.5μV — refer to typical performance curves.
2. Sample tested.
3. Guaranteed by design.

OBSOLETE

MATCHING CHARACTERISTICS at $V_S = \pm 15V$, $-55°C \leq T_A \leq +125°C$, unless otherwise noted. (Continued)

PARAMETER	SYMBOL	CONDITIONS	OP-10A MIN	OP-10A TYP	OP-10A MAX	OP-10 MIN	OP-10 TYP	OP-10 MAX	UNITS
Average Noninverting Bias Current	I_B+		—	±2.0	±6.0	—	±2.4	±8.0	nA
Average Drift of Noninverting Bias Current	TCI_B+	(Note 2)	—	10	40	—	15	—	pA/°C
Noninverting Offset Current	$I_{OS}+$		—	2.0	6.5	—	2.4	9.0	nA
Average Drift of Noninverting Offset Current	$TCI_{OS}+$	(Note 2)	—	12	50	—	18	—	pA/°C
Inverting Offset Current	$I_{OS}-$		—	2.0	6.5	—	2.4	9.0	nA
Common-Mode Rejection Ratio Match	ΔCMRR	$V_{CM} = \pm 13V$	108	120	—	103	117	—	dB
Power Supply Rejection Ratio Match	ΔPSRR	$V_S = \pm 3V$ to $\pm 18V$	—	6	20	—	7	32	μV/V

INDIVIDUAL AMPLIFIER CHARACTERISTICS at $V_S = \pm 15V$, $T_A = 25°C$, unless otherwise noted.

PARAMETER	SYMBOL	CONDITIONS	OP-10E MIN	OP-10E TYP	OP-10E MAX	OP-10C MIN	OP-10C TYP	OP-10C MAX	UNITS
Input Offset Voltage	V_{OS}		—	0.2	0.5	—	0.2	0.5	mV
Long-Term Input Offset Voltage Stability	ΔV_{OS}/Time	(Notes 1, 2)	—	0.3	1.5	—	0.5	—	μV/Mo
Input Offset Current	I_{OS}		—	1.2	3.8	—	1.8	6.0	nA
Input Bias Current	I_B		—	±1.2	±4.0	—	±1.8	±7.0	nA
Input Noise Voltage	e_{np-p}	(Note 2) 0.1Hz to 10Hz	—	0.35	0.6	—	0.38	0.65	μV_{p-p}
Input Noise Voltage Density	e_n	(Note 2) $f_O = 10Hz$	—	10.3	18.0	—	10.5	20.0	$nV/\sqrt{Hz}$
		$f_O = 100Hz$	—	10.0	13.0	—	10.2	13.5	
		$f_O = 1000Hz$	—	9.6	11.0	—	9.8	11.5	
Input Noise Current	i_{np-p}	(Note 2) 0.1Hz to 10Hz	—	14	30	—	15	35	pA_{p-p}
Input Noise Current Density	i_n	(Note 2) $f_O = 10Hz$	—	0.32	0.80	—	0.35	0.90	$pA/\sqrt{Hz}$
		$f_O = 100Hz$	—	0.14	0.23	—	0.15	0.27	
		$f_O = 1000Hz$	—	0.12	0.17	—	0.13	0.18	
Input Resistance — Differential-Mode	R_{IN}	(Note 3)	15	50	—	8	33	—	MΩ
Input Resistance — Common-Mode	R_{INCM}		—	160	—	—	120	—	GΩ
Input Voltage Range	IVR		±13	±14	—	±13	±14	—	V
Common-Mode Rejection Ratio	CMRR	$V_{CM} = \pm 13V$	106	123	—	100	120	—	dB
Power Supply Rejection Ratio	PSRR	$V_S = \pm 3V$ to $\pm 18V$	—	4	20	—	10	32	μV/V
Large-Signal Voltage Gain	A_{VO}	$R_L \geq 2k\Omega$, $V_O = \pm 10V$	200	500	—	120	400	—	V/mV
		$R_L \geq 500\Omega$, $V_O = \pm 0.5V$, $V_S = \pm 3V$ (Note 3)	150	500	—	100	400	—	
Output Voltage Swing	V_O	$R_L \geq 10k\Omega$	±12.5	±13.0	—	±12.0	±13.0	—	V
		$R_L \geq 2k\Omega$	±12.0	±12.8	—	±11.5	±12.8	—	
		$R_L \geq 1k\Omega$	±10.5	±12.0	—	—	±12.0	—	

NOTES:

1. Long-Term Input Offset Voltage Stability refers to the averaged trend line of V_{OS} vs. Time over extended periods after the first 30 days of operation. Excluding the initial hour of operation, changes in V_{OS} during the first 30 operating days are typically 2.5μV — refer to typical performance curves.
2. Sample tested.
3. Guaranteed by design.

OBSOLETE

INDIVIDUAL AMPLIFIER CHARACTERISTICS at $V_S = \pm 15V$, $0°C \leq T_A \leq +70°C$, unless otherwise noted. (Continued)

PARAMETER	SYMBOL	CONDITIONS	OP-10E MIN	OP-10E TYP	OP-10E MAX	OP-10C MIN	OP-10C TYP	OP-10C MAX	UNITS
Slewing Rate	SR	$R_L \geq 2k\Omega$	—	0.17	—	—	0.17	—	V/μs
Closed-Loop Bandwidth	BW	$A_{VCL} = +1.0$	—	0.6	—	—	0.6	—	MHz
Open-Loop Output Resistance	R_O	$V_O = 0$, $I_O = 0$	—	60	—	—	60	—	Ω
Power Consumption	P_d	Each Amplifier	—	90	120	—	95	150	mW
		$V_S = \pm 3V$	—	4	6	—	4	8	
Offset Adjustment Range		$R_P = 20k\Omega$	—	±4	—	—	±4	—	mV
Input Capacitance	C_{IN}		—	8	—	—	8	—	pF

INDIVIDUAL AMPLIFIER CHARACTERISTICS at $V_S = \pm 15V$, $0°C \leq T_A \leq +70°C$, unless otherwise noted.

PARAMETER	SYMBOL	CONDITIONS	OP-10E MIN	OP-10E TYP	OP-10E MAX	OP-10C MIN	OP-10C TYP	OP-10C MAX	UNITS
Input Offset Voltage	V_{OS}		—	0.25	0.6	—	0.35	1.6	mV
Average Input Offset Voltage Drift									
Without External Trim	TCV_{OS}	(Note 2)	—	0.7	2.0	—	1.2	4.5	μV/°C
With External Trim	TCV_{OSn}	$R_P = 20k\Omega$ (Note 3)	—	0.3	1.0	—	0.4	1.5	μV/°C
Input Offset Current	I_{OS}		—	1.4	5.3	—	2.0	8.0	nA
Average Input Offset Current Drift	TCI_{OS}	(Note 2)	—	8	50	—	12	50	pA/°C
Input Bias Current	I_B		—	±1.5	±5.5	—	±2.2	±9.0	nA
Average Input Bias Current Drift	TCI_B	(Note 2)	—	13	50	—	18	50	pA/°C
Input Voltage Range	IVR		±13.0	±13.5	—	±13.0	±13.5	—	V
Common-Mode Rejection Ratio	CMRR	$V_{CM} = \pm 13V$	103	123	—	97	120	—	dB
Power Supply Rejection Ratio	PSRR	$V_S = \pm 3V$ to $\pm 18V$	—	7	32	—	10	51	μV/V
Large-Signal Voltage Gain	A_{VO}	$R_L \geq 2k\Omega$, $V_O = \pm 10V$	100	400	—	100	400	—	V/mV
Output Voltage Swing	V_O	$R_L \geq 2k\Omega$	±12.0	±12.6	—	±11.0	±12.6	—	V

OBSOLETE

NOTES:

1. Long-Term Input Offset Voltage Stability refers to the averaged trend line of V_{OS} vs. Time over extended periods after the first 30 days of operation. Excluding the initial hour of operation, changes in V_{OS} during the first 30 operating days are typically 2.5μV — refer to typical performance curves.
2. Sample tested.
3. Guaranteed by design.

MATCHING CHARACTERISTICS at $V_S = \pm 15V$, $T_A = 25°C$, unless otherwise noted.

PARAMETER	SYMBOL	CONDITIONS	OP-10E MIN	OP-10E TYP	OP-10E MAX	OP-10C MIN	OP-10C TYP	OP-10C MAX	UNITS
Input Offset Voltage Match	ΔV_{OS}		—	0.12	0.5	—	0.3	—	mV
Average Noninverting Bias Current	I_B+		—	±1.3	±4.5	—	±2.0	—	nA
Noninverting Offset Current	$I_{OS}+$		—	1.1	4.5	—	1.8	—	nA
Inverting Offset Current	$I_{OS}-$		—	1.1	4.5	—	1.8	—	nA
Common-Mode Rejection Ratio Match	$\Delta CMRR$	$V_{CM} = \pm 13V$	106	120	—	—	117	—	dB
Power Supply Rejection Ratio Match	$\Delta PSRR$	$V_S = \pm 3V$ to $\pm 18V$	—	4	20	—	5	—	μV/V
Channel Separation	CS	(Note 1)	126	140	—	120	137	—	dB

MATCHING CHARACTERISTICS at $V_S = \pm 15V$, $0°C \leq T_A \leq +70°C$, unless otherwise noted.

PARAMETER	SYMBOL	CONDITIONS	OP-10E MIN	OP-10E TYP	OP-10E MAX	OP-10C MIN	OP-10C TYP	OP-10C MAX	UNITS
Input Offset Voltage Match	ΔV_{OS}		—	0.18	0.7	—	0.4	—	mV
Input Offset Voltage Tracking Without External Trim	$TC\Delta V_{OS}$	(Note 1)	—	0.9	2.3	—	1.3	—	μV/°C
With External Trim	$TC\Delta V_{OSn}$	$R_L = 20k\Omega$ Channel A Only (Note 2)	—	0.3	0.9	—	0.6	—	μV/°C
Average Noninverting Bias Current	I_B+		—	±2.0	±6.0	—	±2.8	—	nA
Average Drift of Noninverting Bias Current	TCI_B+	(Note 1)	—	12	40	—	18	—	pA/°C
Noninverting Offset Current	I_B+		—	2.0	6.0	—	2.8	—	nA
Average Drift of Noninverting Offset Current	$TCI_{OS}+$	(Note 1)	—	15	50	—	20	—	pA/°C
Input Offset Current	$I_{OS}-$		—	2.0	6.0	—	2.8	—	nA
Common-Mode Rejection Ratio Match	$\Delta CMRR$	$V_{CM} = \pm 13V$	103	117	—	—	114	—	dB
Power Supply Rejection Ratio Match	$\Delta PSRR$	$V_S = \pm 3V$ to $\pm 18V$	—	6	32	—	8	—	μV/V

OBSOLETE

NOTES:
1. Sample tested.
2. Guaranteed by design.

BURN-IN CIRCUIT

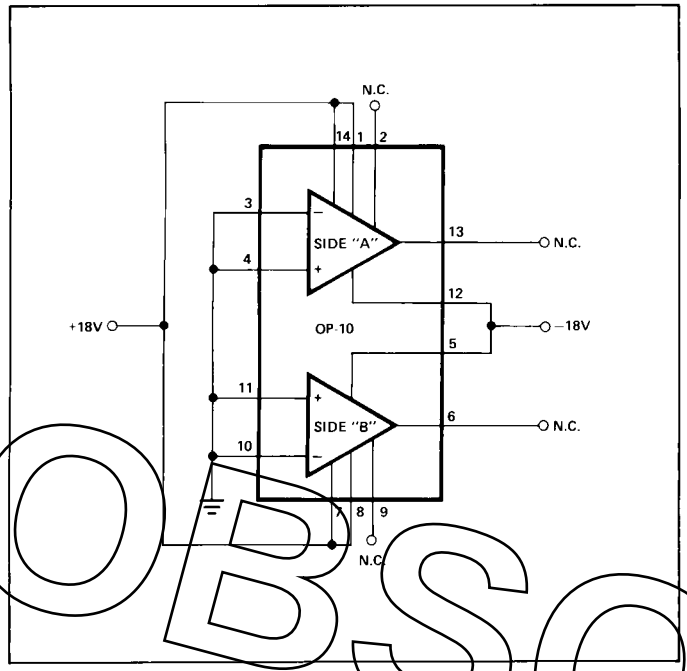

OFFSET NULLING CIRCUIT

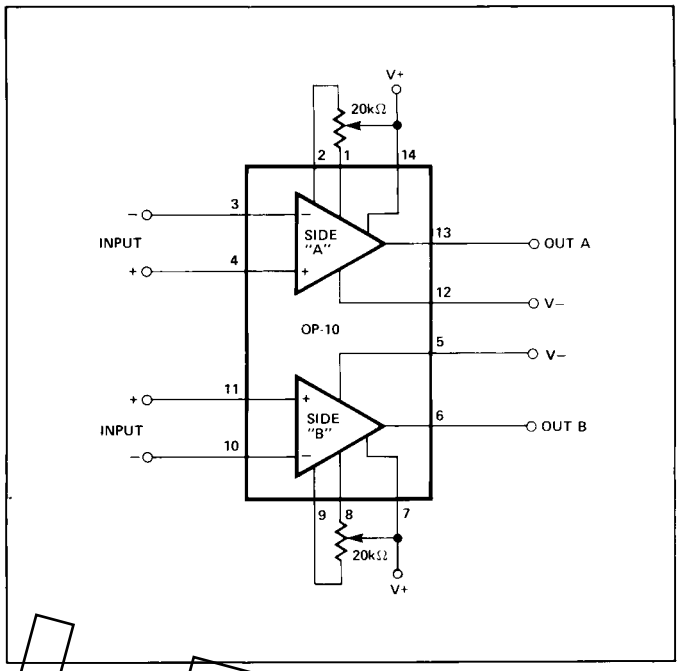

OBSOLETE

TYPICAL PERFORMANCE CHARACTERISTICS

MATCHING CHARACTERISTICS TRIMMED OFFSET VOLTAGE MATCH vs TEMPERATURE

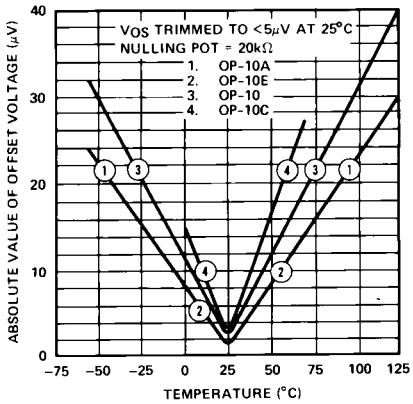

MATCHING CHARACTERISTICS TRIMMED MATCHED OFFSET VOLTAGE DRIFT AS A FUNCTION OF TRIMMING POT (R_P) SIZE AND ΔV_{OS}

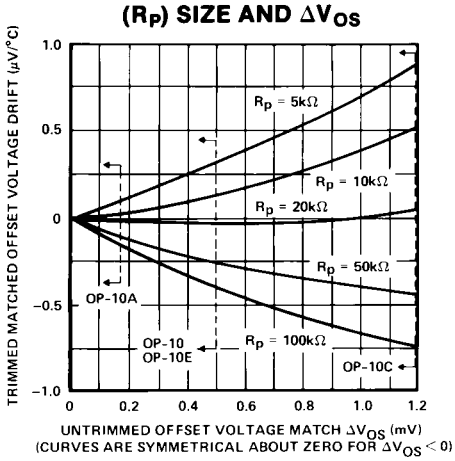

MATCHING CHARACTERISTICS CHANNEL SEPARATION vs FREQUENCY

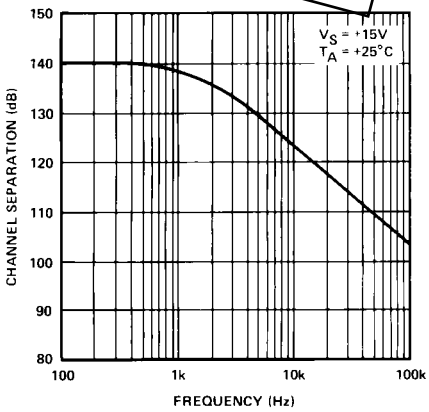

OP-10

TYPICAL PERFORMANCE CHARACTERISTICS

TYPICAL LOW-FREQUENCY NOISE TEST CIRCUIT

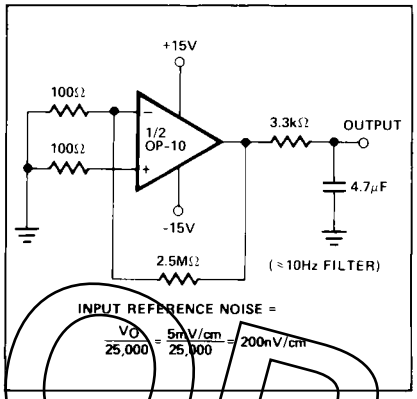

MATCHING CHARACTERISTIC MAXIMUM INPUT ERROR vs SOURCE RESISTANCE

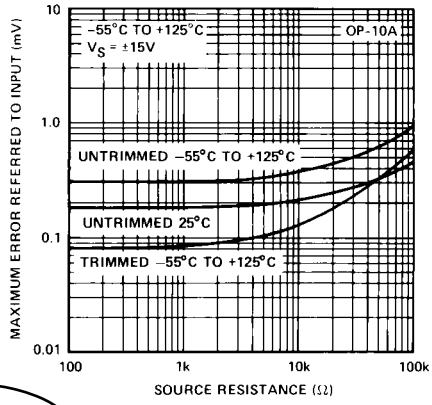

MATCHING CHARACTERISTIC MAXIMUM INPUT ERROR vs SOURCE RESISTANCE

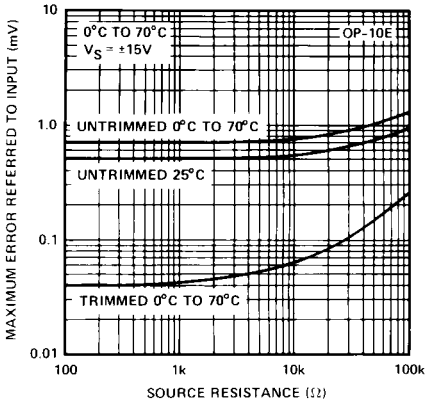

OBSOLETE

OP-10 LOW FREQUENCY NOISE

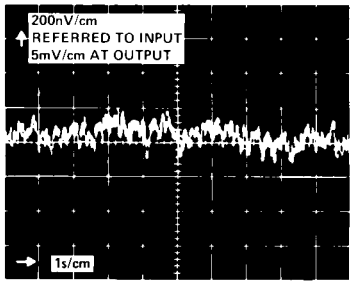

VOLTAGE NOISE DENSITY vs FREQUENCY

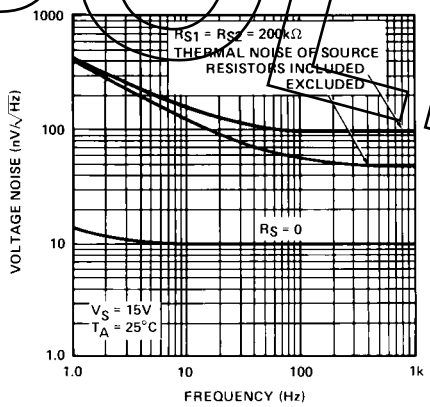

INPUT WIDEBAND NOISE vs BANDWIDTH (0.1Hz TO FREQUENCY INDICATED)

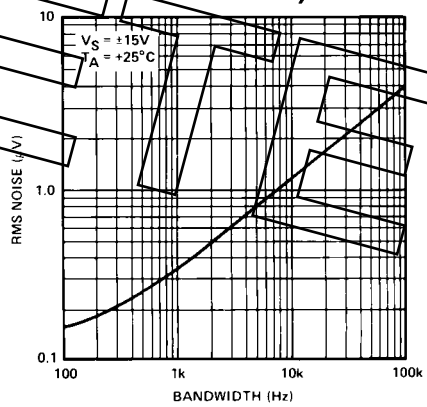

TYPICAL OFFSET VOLTAGE STABILITY vs TIME

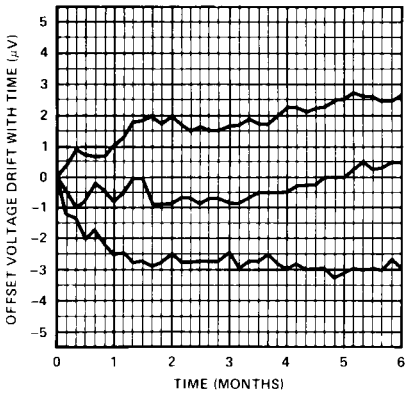

OFFSET VOLTAGE DRIFT WITH TIME

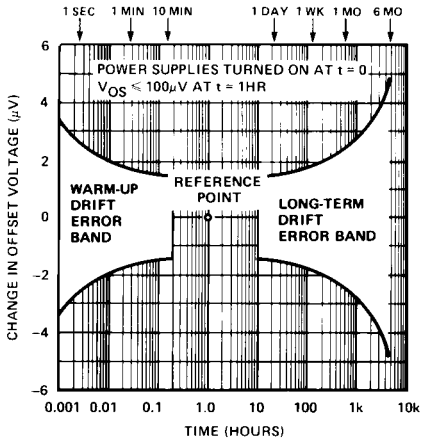

TRIMMED OFFSET VOLTAGE vs TEMPERATURE

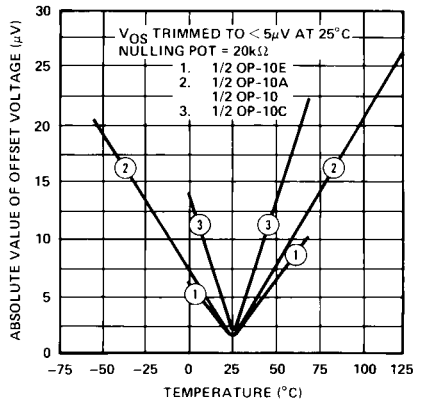

TYPICAL PERFORMANCE CHARACTERISTICS

CMRR vs FREQUENCY

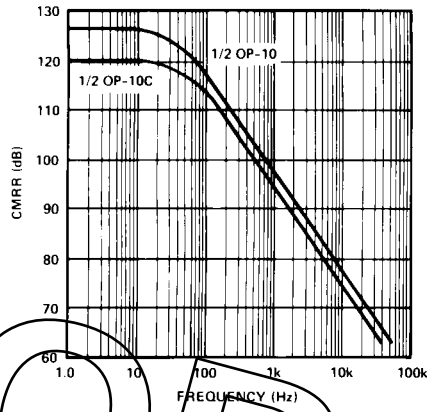

PSRR vs FREQUENCY

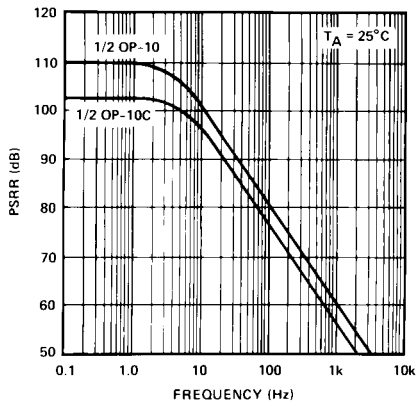

CLOSED-LOOP GAIN vs FREQUENCY

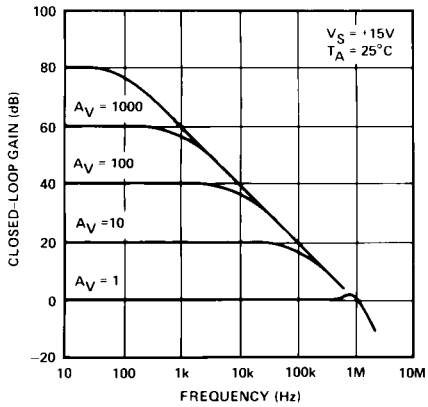

OPEN-LOOP GAIN vs FREQUENCY

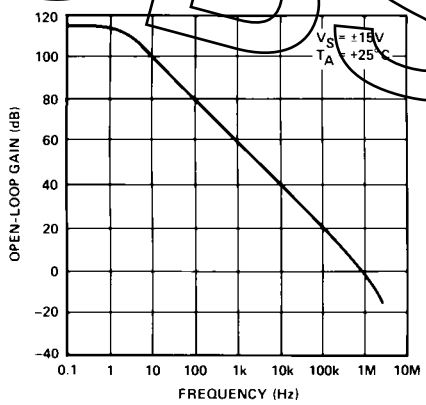

OPEN-LOOP GAIN vs POWER SUPPLY VOLTAGE

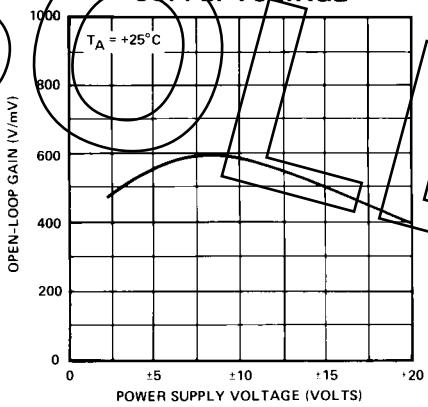

OPEN-LOOP GAIN vs TEMPERATURE

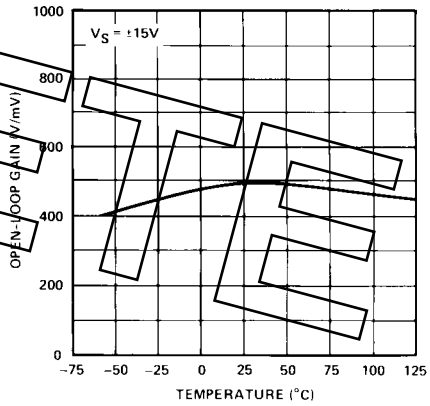

MAXIMUM OUTPUT SWING vs FREQUENCY

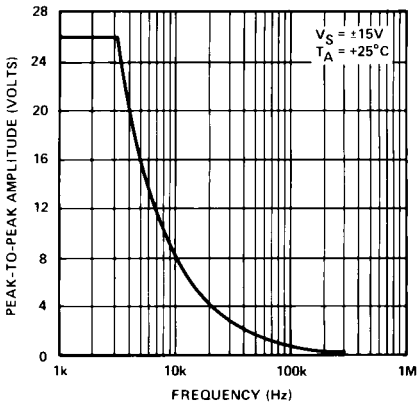

MAXIMUM OUTPUT VOLTAGE vs LOAD RESISTANCE

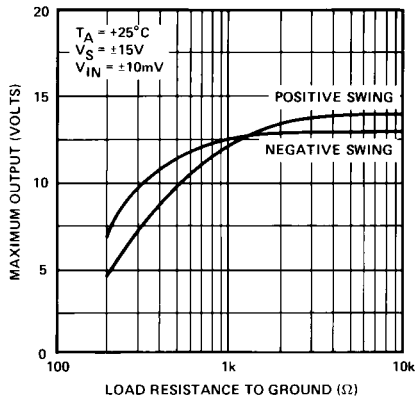

POWER CONSUMPTION vs POWER SUPPLY

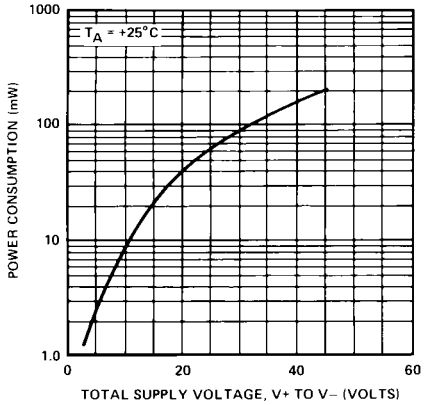

OBSOLETE

OP-10

TYPICAL PERFORMANCE CHARACTERISTICS

OFFSET VOLTAGE CHANGE DUE TO THERMAL SHOCK

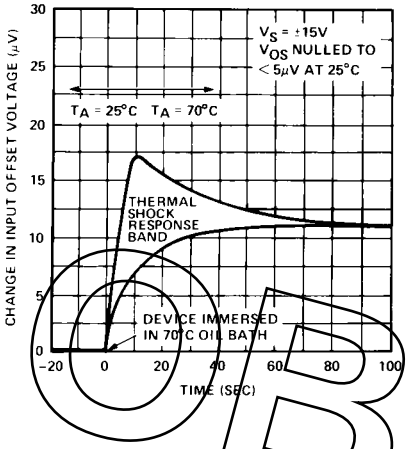

INPUT BIAS CURRENT vs DIFFERENTIAL INPUT VOLTAGE

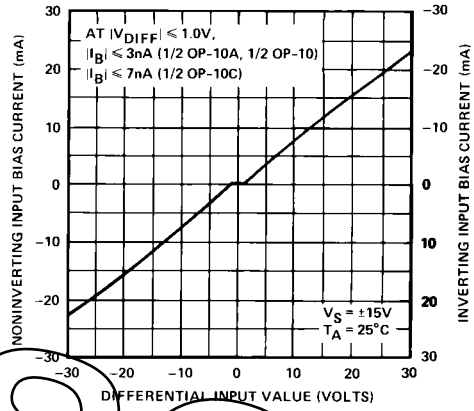

INPUT BIAS CURRENT vs TEMPERATURE

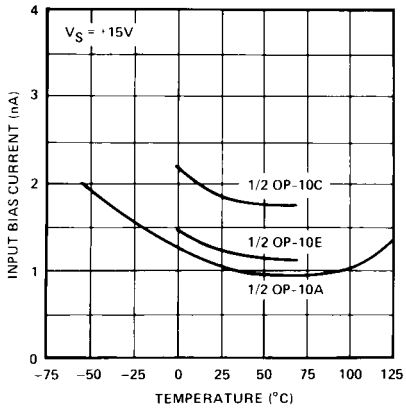

OBSOLETE

APPLICATIONS INFORMATION

ADVANTAGES OF DUAL MATCHED OPERATIONAL AMPLIFIERS

Dual matched operational amplifiers provide a powerful tool for the solution of some difficult circuit design problems. Circuits include true instrumentation amplifiers, extremely low drift, high common-mode rejection DC amplifiers, low DC drift active filters, dual tracking voltage references and many other demanding applications. These designs all require good matching between two operational amplifiers.

The adjacent circuit, a differential-in, differential-out amplifier, shows how errors can be reduced. Assuming the resistors used are matched, the gain of each side will be identical; if the offset voltage of each amplifier is matched, then the net differential voltage at the amplifiers output will be zero. Note that the output offset error of this amplifier is not a function of the offset voltage of the individual amplifiers, but only a function of the **difference** between the amplifiers' offset voltages. This error-cancellation principle holds for a number of input-referred error parameters — offset voltage, offset voltage drift, inverting and noninverting bias currents, common-mode and power supply rejection ratios. Note also that the impedances of each input, both common-mode and differential-mode, are extremely high, an important feature not possible with single operational amplifier circuits. Common-mode rejection can be made very high; this is especially important in instrumentation amplifiers where errors due to large common-mode voltages can be far greater than errors due to noise or drift with temperature.

For example, consider the case of two op amps, each with 80dB (100μV/V) CMRR. If the CMRR of one device is +100μV/V while CMRR of the other is −100μV/V, then the net CMRR will be 200μV/V, a 6dB degradation. The matching of CMRR increases the effective CMRR when used as an instrumentation input stage.

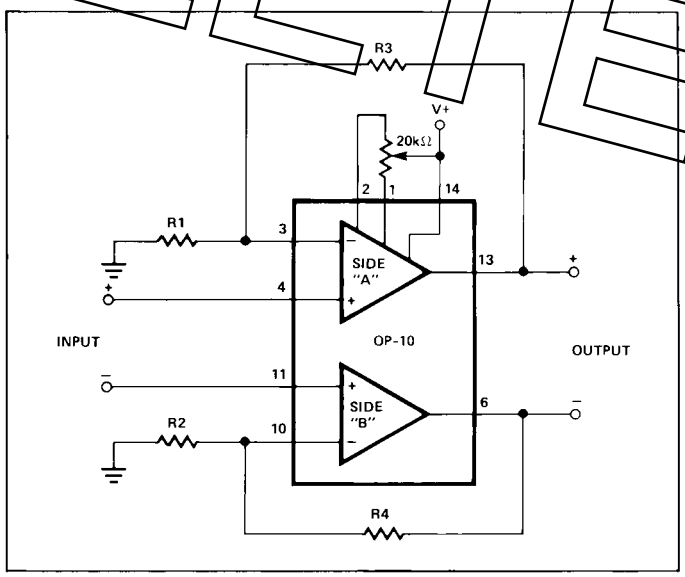

POWER SUPPLIES

The V+ supply terminals are completely independent and may be powered by separate supplies if desired (this approach, however, would sacrifice the advantages of the power supply rejection ratio matching). The V− supply terminals are both connected to the common substrate and must be tied to the same voltage.

OFFSET TRIMMING

Offset trimming terminals are provided for each amplifier of the OP-10. Guaranteed performance over temperature is obtained by trimming only one side (side A) to match the offset of the other; a net differential offset of zero results. This procedure is used during factory testing of the devices; however, essentially the same results may be obtained by trimming side B to match side A, or by nulling each side individually.

The OP-10 provides lowest drift when trimmed with a 20kΩ potentiometer; this value provides about ±4mV of adjustment range which should be more than adequate for most applications. Where finer trimming resolution is desired, or where unwanted changes in potentiometer position with time and temperature could create unacceptable offsets, the adjustment sensitivity may be reduced by using the circuit shown below.

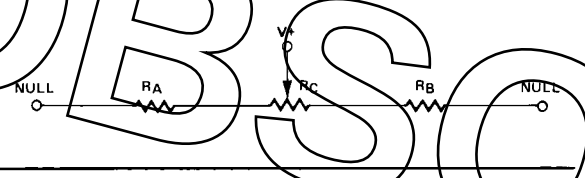

Model	Null Range	Fixed Resistors R_A, R_B	Potentiometer R_C
OP-10AY, OP-10Y, OP-10EY	±1.2mV	5.1kΩ	10.0kΩ

INSTRUMENTATION AMPLIFIERS USING OP-10

Instrumentation amplifiers with excellent performance can be easily built using the OP-10. Typical performance for a two and three-amplifier design are given in the table. The three-amplifier design, while more complex, has the advantages of simple gain adjustment by trimming a single resistor (R_3) and wide common-mode voltage capability at any gain, plus improved gain linearity. Slew rate, small-signal bandwidth, and full power bandwidth are also superior. Speed will be improved by using an OP-01 for the output stage.

TYPICAL PERFORMANCE OF INSTRUMENTATION AMPLIFIERS GAIN = 100

PARAMETER	2 OP AMP DESIGN	3 OP AMP DESIGN
Gain Nonlinearity	0.004%	0.001% (OP-05)
		0.002% (OP-01)
Initial Input Offset Voltage	70μV	75μV
vs. Temperature (amplifier A nulled with 20k pot)	0.3μV/°C	0.3μV/°C
vs. Time	3.5μV/month	3.5μV/month
Input Bias Current	±1nA	±1nA
vs. Temperature	10pA/°C	10pA/°C
Input Offset Current	0.8nA	0.8nA
vs. Temperature	12pA/°C	12pA/°C
Input Impedance		
Differential	80GΩ	100GΩ
Common-Mode	100GΩ	100GΩ
Input Noise Voltage (0.1 to 10Hz)	0.5μVp-p	0.5μVp-p
Input Noise Current (0.1 to 10Hz)	14pAp-p	14pAp-p
Common-Mode Rejection	120dB	120dB
Power Supply Rejection	112dB	112dB
Frequency Response		
Small-Signal (−3dB)	6.0Hz	26kHz (OP-05) 85kHz (OP-01)
Full Power	2.5Hz	4.3kHz (OP-05) 43kHz (OP-01)
Slew Rate	0.17V/μs	0.17V/μs (OP-05) 4.0V/μs (OP-01)

TRIPLE OP-AMP INSTRUMENTATION AMPLIFIER

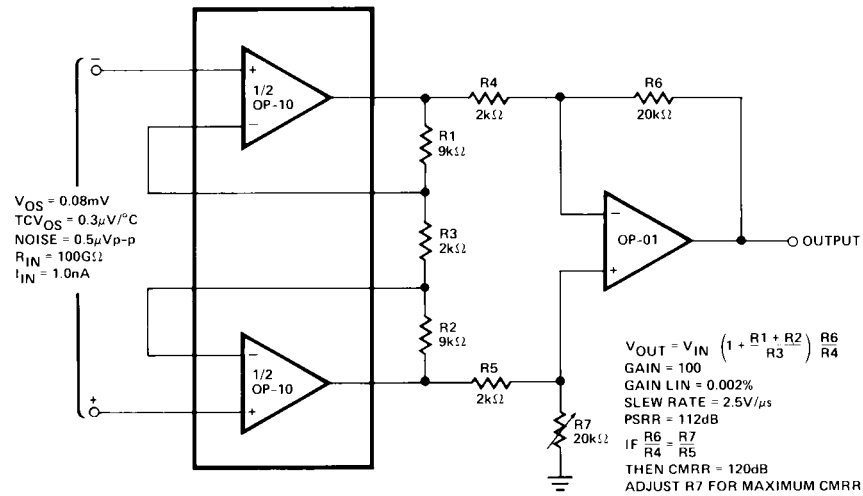

OBSOLETE

CMRR vs FREQUENCY INSTRUMENTATION AMPLIFIER (3 OP-AMP DESIGN)

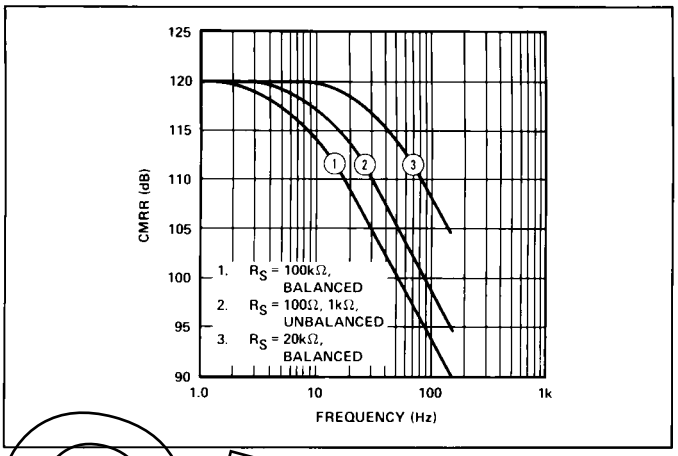

PRECISION DUAL TRACKING VOLTAGE REFERENCES USING OP-10

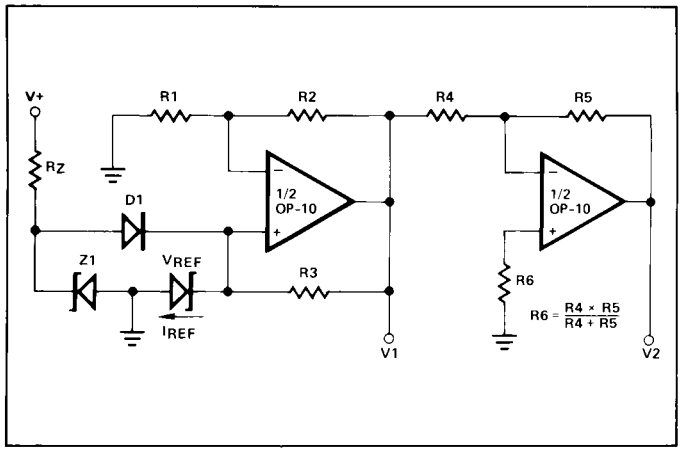

PRECISION DUAL TRACKING VOLTAGE REFERENCES USING OP-10

Precision dual tracking voltage references using a single reference source are easily constructed using OP-10. These references exhibit low noise, excellent stability vs. temperature and time, and have excellent power supply rejection.

In the circuit shown, R_3 should be adjusted to set I_{REF} to operate V_{REF} at its minimum temperature coefficient current. Proper circuit start-up is assured by R_Z, Z_1, and D_1.

$V_{Z1} \leq V_{REF} + 2V$ $\qquad$ $V1 = V_{REF}\left(1 + \frac{R2}{R1}\right)$

$I_{REF} = (V1 - V_{REF})/R3$ $\qquad$ $V2 = V1\left(\frac{-R5}{R4}\right)$

Output Impedance (ΔI_L:1.0mA-5.0mA) ..... $0.25 \times 10^{-3}\Omega$
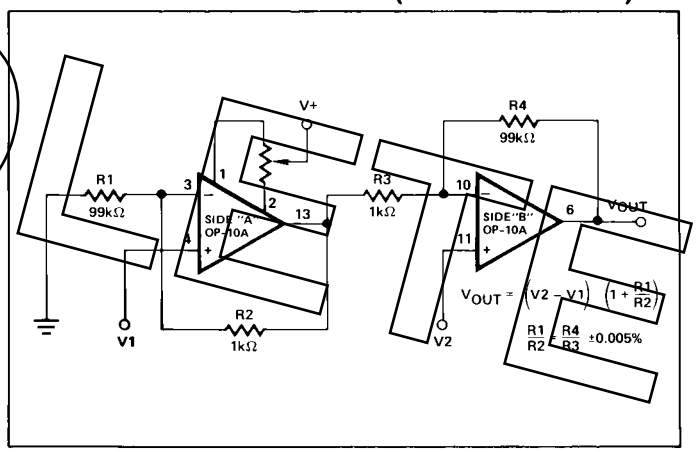
INSTRUMENTATION AMPLIFIER (2 OP-AMP DESIGN)