Low-Voltage Manual Reset & Watchdog Supervisory Circuits in 4-Lead SC70

Preliminary Technical Data

ADM8611/ADM8616/ADM8617/ADM8618

FEATURES

- Precision 1.8V to 5V Power Supply Monitoring
- 9 Reset Threshold Options:
  - 1.58V to 4.63V
- 140ms (Min) Reset Timeout
- Manual Reset Input (ADM8611)
- Watchdog Timer (ADM8616–ADM8618)
- Reset Output Stages
  - Push-Pull Active-Low
  - Open-Drain Active-Low
  - Push-Pull Active-High
- Low Power Consumption (3µA)
- Guaranteed Reset Output valid to V_{CC}=1V
- Power Supply Glitch Immunity
- Specified Over -40°C to +85°C Temperature Range
- 4-Lead SC70 Package

APPLICATIONS

- Microprocessor Systems
- Computers
- Controllers
- Intelligent Instruments
- Portable Equipment

FUNCTIONAL BLOCK DIAGRAMS

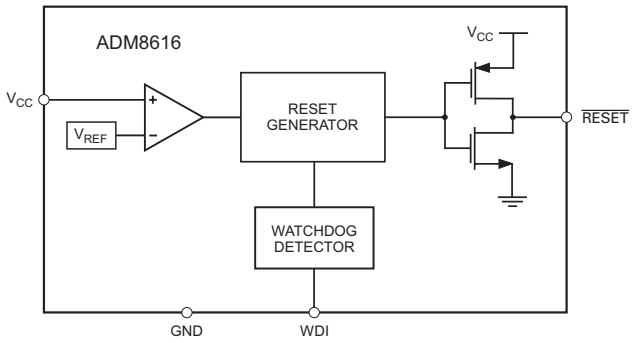

Figure 1.

GENERAL DESCRIPTION

The ADM8611/ADM8616/ADM8617/ADM8618 are supervisory circuits which monitor power supply voltage levels and code execution integrity in microprocessor-based systems. A power-on-reset signal is generated when the supply voltage rises to a preset threshold level. The ADM8611's debounced manual reset input can be used to initiate a reset by means of an external push-button or logic signal. The ADM8616–ADM8618 have an on-chip watchdog timer which can reset the microprocessor if it fails to strobe within a preset timeout period.

Each part is available in a choice of the following 9 reset threshold options: 1.58V, 1.67V, 2.19V, 2.32V, 2.63V, 2.93V, 3.08V, 4.38V and 4.63V. The reset timeout periods are 20ms (min) and 140ms (min) for the ADM8611 and ADM8616–ADM8618, respectively. The watchdog timeout period is 1.6s (typ). The parts differ in terms of reset output configuration, as indicated in table 1.

The ADM8611/ADM8616/ADM8617/ADM8618 are available in 4-lead SC70 packages and typically consume only 3µA, making them suitable for use in low power portable applications.

Table 1. Selection Table

Part No.	Manual Reset	Watchdog	Output Stage	
			$\overline{\text{RESET}}$	RESET
ADM8611	Yes	-	Push-Pull	
ADM8616	-	Yes	Push-Pull	
ADM8617	-	Yes	Open-Drain	
ADM8618	-	Yes		Push-Pull

Rev. PrB

Information furnished by Analog Devices is believed to be accurate and reliable. However, no responsibility is assumed by Analog Devices for its use, nor for any infringements of patents or other rights of third parties that may result from its use. Specifications subject to change without notice. No license is granted by implication or otherwise under any patent or patent rights of Analog Devices. Trademarks and registered trademarks are the property of their respective companies.

One Technology Way, P.O. Box 9106, Norwood, MA 02062-9106, U.S.A.
Tel: 781.329.4700 www.analog.com
Fax: 781.326.8703
© 2004 Analog Devices, Inc. All rights reserved.

ADM8611/ADM8616/ADM8617/ADM8618—SPECIFICATIONS

Table 2. V_{CC}=Full Operating Range, T_A=T_{MIN} to T_{MAX}, unless otherwise noted

Parameter	Min	Typ	Max	Units	Test Conditions/Comments
SUPPLY					
V_{CC} Operating Voltage Range	1		5.5	V	
Supply Current		10	20	µA	V_{CC}=5.5V
		5	12	µA	V_{CC}=3.6V
RESET THRESHOLD VOLTAGE					
ADM861_L	4.50	4.63	4.75	V	T_A=-40°C to +85°C
ADM861_M	4.25	4.38	4.50	V	T_A=-40°C to +85°C
ADM861_T	3.00	3.08	3.15	V	T_A=-40°C to +85°C
ADM861_S	2.85	2.93	3.00	V	T_A=-40°C to +85°C
ADM861_R	2.55	2.63	2.70	V	T_A=-40°C to +85°C
ADM861_Z	2.25	2.32	2.38	V	T_A=-40°C to +85°C
ADM861_Y	2.12	2.19	2.25	V	T_A=-40°C to +85°C
ADM861_W	1.62	1.67	1.71	V	T_A=-40°C to +85°C
ADM861_V	1.52	1.58	1.62	V	T_A=-40°C to +85°C
RESET THRESHOLD TEMPERATURE COEFFICIENT		40		ppm/°C	
RESET THRESHOLD HYSTERESIS		3		mV	
RESET TIMEOUT PERIOD	20	30	40	ms	ADM8611
	140	200	280	ms	ADM8616–ADM8618
V_{CC} TO RESET DELAY		40		µs	V_{CC} falling at 1mV/µs
PUSH-PULL OUTPUT (ADM8611, ADM8616, ADM8618)					
$\overline{\text{RESET}}$ Output Voltage			0.3	V	V_{CC}>=1.0V, I_{SINK}=50µA
			0.3	V	V_{CC}>=1.2V, I_{SINK}=100µA
			0.3	V	V_{CC}>=2.7V, I_{SINK}=1.2mA
			0.4	V	V_{CC}>=4.5V, I_{SINK}=3.2mA
	0.8x V_{CC}			V	V_{CC}>=2.7V, I_{SOURCE}=500µA
	V_{CC}-1.5			V	V_{CC}>=4.5V, I_{SOURCE}=800µA
$\overline{\text{RESET}}$ Rise Time		5	25	ns	From 10% to 90% V_{CC}, C_L=5pF, V_{CC} =3.3V
RESET Output Voltage			0.3	V	V_{CC}>=2.7V, I_{SINK}=1.2mA
			0.4	V	V_{CC}>=4.5V, I_{SINK}=3.2mA
	0.8x V_{CC}			V	V_{CC}>=1.8V, I_{SOURCE}=150µA
	0.8x V_{CC}			V	V_{CC}>=2.7V, I_{SOURCE}=500µA
	V_{CC}-1.5				V_{CC}>=4.5V, I_{SOURCE}=800µA
OPEN-DRAIN OUTPUT (ADM8617)					
$\overline{\text{RESET}}$ Output Voltage			0.3	V	V_{CC}>=1.0V, I_{SINK}=50µA
			0.3	V	V_{CC}>=1.2V, I_{SINK}=100µA
			0.3	V	V_{CC}>=2.7V, I_{SINK}=1.2mA
			0.4	V	V_{CC}>=4.5V, I_{SINK}=3.2mA
Open-Drain Reset Output Leakage Current			1	µA	

Parameter	Min	Typ	Max	Units	Test Conditions/Comments
MANUAL RESET INPUT (ADM8611)					
$\overline{MR}$ Input Threshold			$0.3xV_{CC}$	V	
	$0.7xV_{CC}$			V	
$\overline{MR}$ Input Pulse Width	1			µs	
$\overline{MR}$ Glitch Rejection		100		ns	
$\overline{MR}$ Pull-up Resistance	25	50	75	kΩ	
$\overline{MR}$ to Reset Delay		200		ns	
WATCHDOG INPUT (ADM8616, ADM8617, ADM8618)					
Watchdog Timeout Period	4.3	6.3	9.3	ms	ADM86___W
	71	102	153	ms	ADM86___X
	1.12	1.6	2.4	s	ADM86___Y
	17.9	25.6	38.4	s	ADM86___Z
WDI Pulse Width	50			ns	V_{IL}=$0.3xV_{CC}$, V_{IH}=$0.7xV_{CC}$,
WDI Input Threshold	$0.3xV_{CC}$			V	
			$0.7xV_{CC}$	V	
WDI Input Current		120	160	µA	V_{WDI}= V_{CC}, time average
	-20	-15		µA	V_{WDI}=0, time average

ABSOLUTE MAXIMUM RATINGS

Table 3. T_A = 25°C unless otherwise noted.

Parameter	Rating
V_{CC}	-0.3V to +6V
$\overline{RESET}$/RESET	-0.3V to +6V
Output Current (RESET, $\overline{RESET}$)	20mA
Operating Temperature Range	-40°C to +85°C
Storage Temperature Range	-65°C to +150°C
θ_{JA} Thermal Impedance, SC70	146°C/W
Lead Temperature	
Soldering (10 sec)	300°C
Vapour Phase (60 sec)	215°C
Infrared (15 sec)	220°C

Stresses above those listed under Absolute Maximum Ratings may cause permanent damage to the device. This is a stress rating only and functional operation of the device at these or any other conditions above those indicated in the operational section of this specification is not implied. Exposure to absolute maximum rating conditions for extended periods may affect device reliability.

PIN CONFIGURATIONS AND FUNCTIONAL DESCRIPTIONS

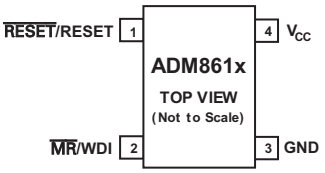

Table 4. Pin Functional Descriptions

Pin No.	Name	Description
1	$\overline{\text{RESET}}$ (ADM8616/ADM8617)	Active-Low Reset Output, which is asserted whenever V_{CC} is below the reset.threshold, V_{TH}. Push-Pull Output Stage for ADM8616. Open-Drain Output Stage for ADM8617.
	RESET (ADM8618)	Active-High, Push-Pull Reset Output.
2	$\overline{\text{MR}}$ (ADM8611)	Manual Reset Input. This is an active-low input which, when forced low for at least 1µs, generates a reset. Features a 52kΩ internal pull-up.
	WDI (ADM8616/ADM8617/ADM8618)	Watchdog Input. Generates a reset if the logic level on the pin remains low or high for the duration of the watchdog timeout. The timer is cleared if a logic transition occurs on this pin or if a reset is generated. Leave floating to disable the watchdog timer.
3	GND	Ground
4	V_{CC}	Power Supply Voltage being Monitored.

ESD CAUTION

ESD (electrostatic discharge) sensitive device. Electrostatic charges as high as 4000 V readily accumulate on the human body and test equipment and can discharge without detection. Although this product features proprietary ESD protection circuitry, permanent damage may occur on devices subjected to high energy electrostatic discharges. Therefore, proper ESD precautions are recommended to avoid performance degradation or loss of functionality.

OUTLINE DIMENSIONS

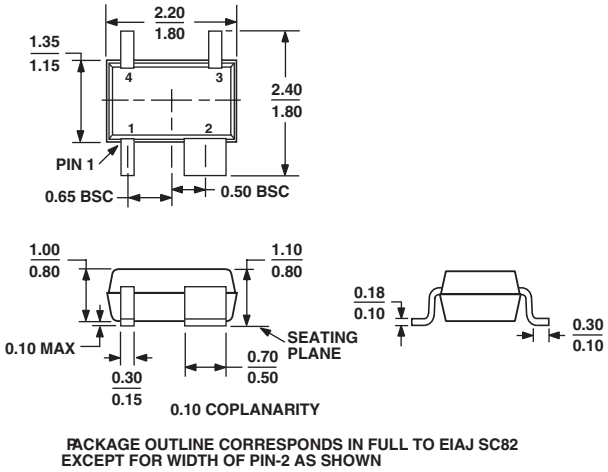

Figure 2. 4-Lead Plastic Surface Mount Package [SC70]

(KS-4)

Dimensions shown in millimeters

ORDERING GUIDE (ADM8611/ADM8616)

Model[1]	Reset Threshold (V)	Temperature Range	Quantity	Package Type	Branding
ADM8611LABKS-RL	4.63	-40°C to +85°C	10k	SC70-4	N0F
ADM8611LABKS-RL7	4.63	-40°C to +85°C	3k	SC70-4	N0F
ADM8611MABKS-RL	4.38	-40°C to +85°C	10k	SC70-4	N0F
ADM8611MABKS-RL7	4.38	-40°C to +85°C	3k	SC70-4	N0F
ADM8611TABKS-RL	3.08	-40°C to +85°C	10k	SC70-4	N0F
ADM8611TABKS-RL7	3.08	-40°C to +85°C	3k	SC70-4	N0F
ADM8611SABKS-RL	2.93	-40°C to +85°C	10k	SC70-4	N0F
ADM8611SABKS-RL7	2.93	-40°C to +85°C	3k	SC70-4	N0F
ADM8611RABKS-RL	2.63	-40°C to +85°C	10k	SC70-4	N0F
ADM8611RABKS-RL7	2.63	-40°C to +85°C	3k	SC70-4	N0F
ADM8611ZABKS-RL	2.32	-40°C to +85°C	10k	SC70-4	N0F
ADM8611ZABKS-RL7	2.32	-40°C to +85°C	3k	SC70-4	N0F
ADM8611YABKS-RL	2.19	-40°C to +85°C	10k	SC70-4	N0F
ADM8611YABKS-RL7	2.19	-40°C to +85°C	3k	SC70-4	N0F
ADM8611WABKS-RL	1.67	-40°C to +85°C	10k	SC70-4	N0F
ADM8611WABKS-RL7	1.67	-40°C to +85°C	3k	SC70-4	N0F
ADM8611VABKS-RL	1.58	-40°C to +85°C	10k	SC70-4	N0F
ADM8611VABKS-RL7	1.58	-40°C to +85°C	3k	SC70-4	N0F
ADM8616LAKS-RL	4.63	-40°C to +85°C	10k	SC70-4	N0G
ADM8616LAKS-RL7	4.63	-40°C to +85°C	3k	SC70-4	N0G
ADM8616MAKS-RL	4.38	-40°C to +85°C	10k	SC70-4	N0G
ADM8616MAKS-RL7	4.38	-40°C to +85°C	3k	SC70-4	N0G
ADM8616TAKS-RL	3.08	-40°C to +85°C	10k	SC70-4	N0G
ADM8616TAKS-RL7	3.08	-40°C to +85°C	3k	SC70-4	N0G
ADM8616SAKS-RL	2.93	-40°C to +85°C	10k	SC70-4	N0G
ADM8616SAKS-RL7	2.93	-40°C to +85°C	3k	SC70-4	N0G
ADM8616RAKS-RL	2.63	-40°C to +85°C	10k	SC70-4	N0G
ADM8616RAKS-RL7	2.63	-40°C to +85°C	3k	SC70-4	N0G
ADM8616ZAKS-RL	2.32	-40°C to +85°C	10k	SC70-4	N0G
ADM8616ZAKS-RL7	2.32	-40°C to +85°C	3k	SC70-4	N0G
ADM8616YAKS-RL	2.19	-40°C to +85°C	10k	SC70-4	N0G
ADM8616YAKS-RL7	2.19	-40°C to +85°C	3k	SC70-4	N0G
ADM8616WAKS-RL	1.67	-40°C to +85°C	10k	SC70-4	N0G
ADM8616WAKS-RL7	1.67	-40°C to +85°C	3k	SC70-4	N0G
ADM8616VAKS-RL	1.58	-40°C to +85°C	10k	SC70-4	N0G
ADM8616VAKS-RL7	1.58	-40°C to +85°C	3k	SC70-4	N0G

ORDERING GUIDE (ADM8617/ADM8618)

Model	Reset Threshold (V)	Temperature Range	Quantity	Package Type	Branding
ADM8617LACYKS-RL	4.63	-40°C to +85°C	10k	SC70-4	N0H
ADM8617LACYKS-RL7	4.63	-40°C to +85°C	3k	SC70-4	N0H
ADM8617MACYKS-RL	4.38	-40°C to +85°C	10k	SC70-4	N0H
ADM8617MACYKS-RL7	4.38	-40°C to +85°C	3k	SC70-4	N0H
ADM8617TACYKS-RL	3.08	-40°C to +85°C	10k	SC70-4	N0H
ADM8617TACYKS-RL7	3.08	-40°C to +85°C	3k	SC70-4	N0H
ADM8617SACYKS-RL	2.93	-40°C to +85°C	10k	SC70-4	N0H
ADM8617SACYKS-RL7	2.93	-40°C to +85°C	3k	SC70-4	N0H
ADM8617RACYKS-RL	2.63	-40°C to +85°C	10k	SC70-4	N0H
ADM8617RACYKS-RL7	2.63	-40°C to +85°C	3k	SC70-4	N0H
ADM8617ZACYKS-RL	2.32	-40°C to +85°C	10k	SC70-4	N0H
ADM8617ZACYKS-RL7	2.32	-40°C to +85°C	3k	SC70-4	N0H
ADM8617YACYKS-RL	2.19	-40°C to +85°C	10k	SC70-4	N0H
ADM8617YACYKS-RL7	2.19	-40°C to +85°C	3k	SC70-4	N0H
ADM8617WACYKS-RL	1.67	-40°C to +85°C	10k	SC70-4	N0H
ADM8617WACYKS-RL7	1.67	-40°C to +85°C	3k	SC70-4	N0H
ADM8617VACYKS-RL	1.58	-40°C to +85°C	10k	SC70-4	N0H
ADM8617VACYKS-RL7	1.58	-40°C to +85°C	3k	SC70-4	N0H
ADM8618LACYKS-RL	4.63	-40°C to +85°C	10k	SC70-4	N0J
ADM8618LACYKS-RL7	4.63	-40°C to +85°C	3k	SC70-4	N0J
ADM8618MACYKS-RL	4.38	-40°C to +85°C	10k	SC70-4	N0J
ADM8618MACYKS-RL7	4.38	-40°C to +85°C	3k	SC70-4	N0J
ADM8618TACYKS-RL	3.08	-40°C to +85°C	10k	SC70-4	N0J
ADM8618TACYKS-RL7	3.08	-40°C to +85°C	3k	SC70-4	N0J
ADM8618SACYKS-RL	2.93	-40°C to +85°C	10k	SC70-4	N0J
ADM8618SACYKS-RL7	2.93	-40°C to +85°C	3k	SC70-4	N0J
ADM8618RACYKS-RL	2.63	-40°C to +85°C	10k	SC70-4	N0J
ADM8618RACYKS-RL7	2.63	-40°C to +85°C	3k	SC70-4	N0J
ADM8618ZACYKS-RL	2.32	-40°C to +85°C	10k	SC70-4	N0J
ADM8618ZACYKS-RL7	2.32	-40°C to +85°C	3k	SC70-4	N0J
ADM8618YACYKS-RL	2.19	-40°C to +85°C	10k	SC70-4	N0J
ADM8618YACYKS-RL7	2.19	-40°C to +85°C	3k	SC70-4	N0J
ADM8618WACYKS-RL	1.67	-40°C to +85°C	10k	SC70-4	N0J
ADM8618WACYKS-RL7	1.67	-40°C to +85°C	3k	SC70-4	N0J
ADM8618VACYKS-RL	1.58	-40°C to +85°C	10k	SC70-4	N0J
ADM8618VACYKS-RL7	1.58	-40°C to +85°C	3k	SC70-4	N0J

[1] Entries in bold type are standard models. Contact factory for availability of non-standard models.

© 2004 Analog Devices, Inc. All rights reserved. Trademarks and registered trademarks are the property of their respective companies.
Printed in the U.S.A. PR04795-0-3/04(PrA)