2SD1209(K)

Silicon NPN Epitaxial, Darlington

REJ03G0783-0200
(Previous ADE-208-1143)
Rev.2.00
Aug.10.2005

Application

- Low frequency power amplifier
- Complementary pair with 2SA1193(K)

Outline

RENESAS Package code: PRSS0003DC-A
(Package name: TO-92 Mod)

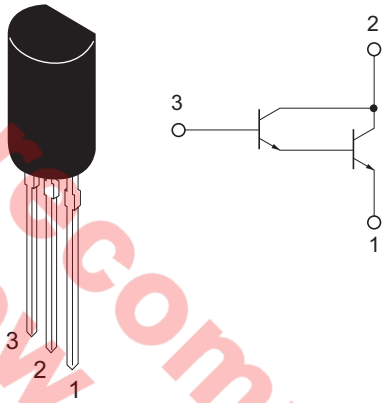

1. Emitter
2. Collector
3. Base

Absolute Maximum Ratings

(Ta = 25°C)

Item	Symbol	Ratings	Unit
Collector to base voltage	V_{CBO}	60	V
Collector to emitter voltage	V_{CEO}	60	V
Emitter to base voltage	V_{EBO}	7	V
Collector current	I_C	1	A
Collector peak current	$i_{C(peak)}$	2	A
Collector power dissipation	P_C	0.9	W
Junction temperature	Tj	150	°C
Storage temperature	Tstg	–55 to +150	°C

Electrical Characteristics

(Ta = 25°C)

Item	Symbol	Min	Typ	Max	Unit	Test conditions
Collector to base breakdown voltage	$V_{(BR)CBO}$	60	—	—	V	I_C = 0.1 mA, I_E = 0
Collector cutoff current	I_{CEO}	—	—	100	µA	V_{CE} = 60 V, R_{BE} = ∞
Emitter cutoff current	I_{EBO}	—	—	100	µA	V_{EB} = 7 V, I_C = 0
DC current transfer ratio	h_{FE}	4000	—	—		V_{CE} = 3 V, I_C = 0.5 A*[1]
Collector to emitter saturation voltage	$V_{CE(sat)}$	—	—	1.5	V	I_C = 500 mA, I_B = 0.5 mA*[1]
Base to emitter saturation voltage	$V_{BE(sat)}$	—	—	2.0	V	I_C = 500 mA, I_B = 0.5 mA*[1]

Note: 1. Pulse test

Main Characteristics

Maximum Collector Dissipation Curve

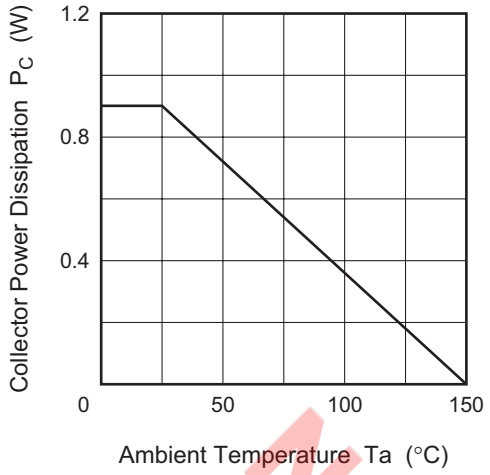

Area of Safe Operation

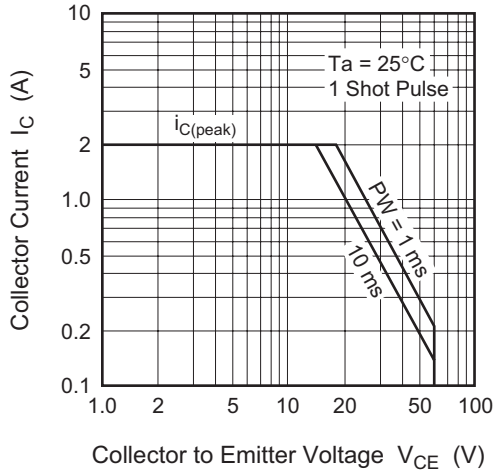

Typical Output Characteristics

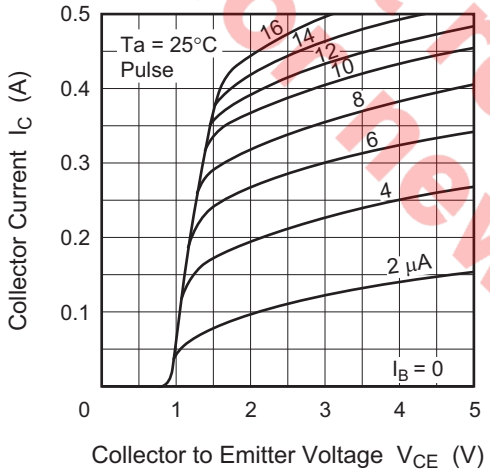

DC Current Transfer Ratio vs. Collector Current

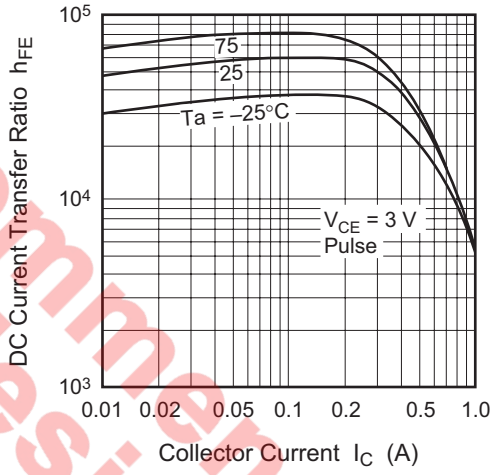

Typical Transfer Characteristics

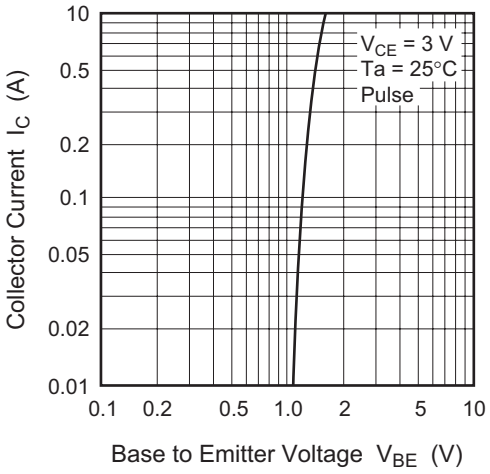

Collector to Emitter Saturation Voltage vs. Collector Current

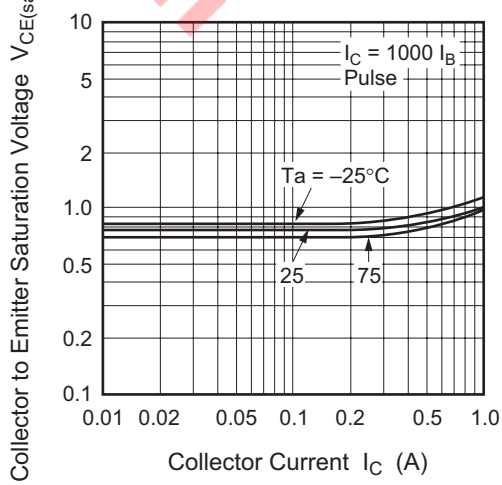

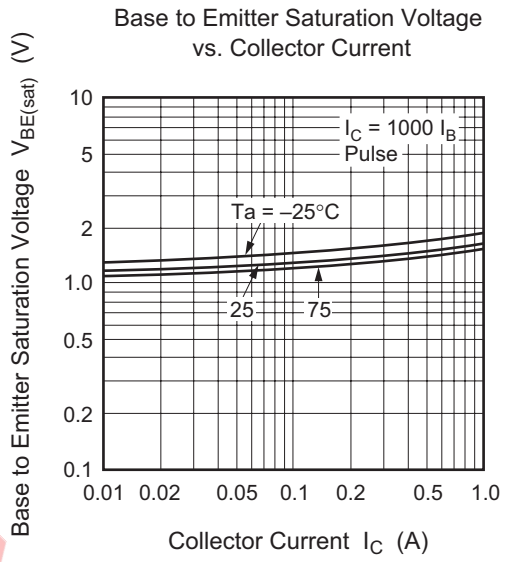

Package Dimensions

JEITA Package Code	RENESAS Code	Package Name	MASS[Typ.]
SC-51	PRSS0003DC-A	TO-92 Mod / TO-92 ModV	0.35g

Unit: mm

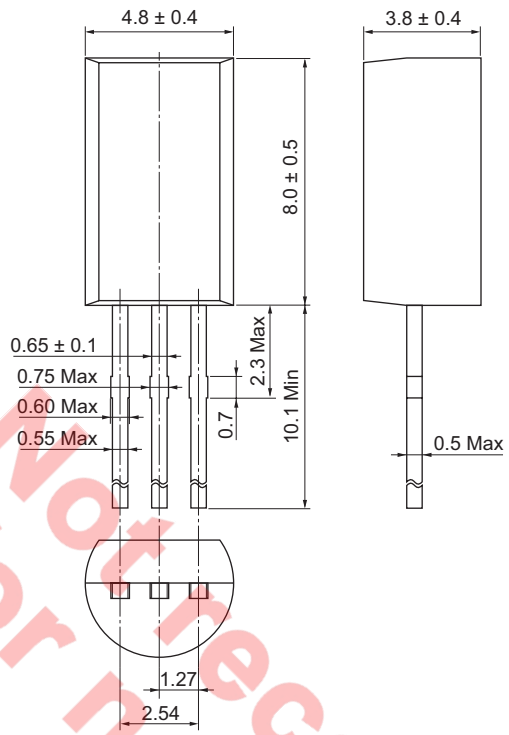

Ordering Information

Part Name	Quantity	Shipping Container
2SD1209KTZ-E	2500	Hold Box, Radial Taping

Note: For some grades, production may be terminated. Please contact the Renesas sales office to check the state of production before ordering the product.

Renesas Technology Corp. Sales Strategic Planning Div. Nippon Bldg., 2-6-2, Ohte-machi, Chiyoda-ku, Tokyo 100-0004, Japan

RENESAS SALES OFFICES

http://www.renesas.com

Refer to "**http://www.renesas.com/en/network**" for the latest and detailed information.

Renesas Technology America, Inc.
450 Holger Way, San Jose, CA 95134-1368, U.S.A
Tel: <1> (408) 382-7500, Fax: <1> (408) 382-7501

Renesas Technology Europe Limited
Dukes Meadow, Millboard Road, Bourne End, Buckinghamshire, SL8 5FH, U.K.
Tel: <44> (1628) 585-100, Fax: <44> (1628) 585-900

Renesas Technology Hong Kong Ltd.
7th Floor, North Tower, World Finance Centre, Harbour City, 1 Canton Road, Tsimshatsui, Kowloon, Hong Kong
Tel: <852> 2265-6688, Fax: <852> 2730-6071

Renesas Technology Taiwan Co., Ltd.
10th Floor, No.99, Fushing North Road, Taipei, Taiwan
Tel: <886> (2) 2715-2888, Fax: <886> (2) 2713-2999

Renesas Technology (Shanghai) Co., Ltd.
Unit2607 Ruijing Building, No.205 Maoming Road (S), Shanghai 200020, China
Tel: <86> (21) 6472-1001, Fax: <86> (21) 6415-2952

Renesas Technology Singapore Pte. Ltd.
1 Harbour Front Avenue, #06-10, Keppel Bay Tower, Singapore 098632
Tel: <65> 6213-0200, Fax: <65> 6278-8001

Renesas Technology Korea Co., Ltd.
Kukje Center Bldg. 18th Fl., 191, 2-ka, Hangang-ro, Yongsan-ku, Seoul 140-702, Korea
Tel: <82> 2-796-3115, Fax: <82> 2-796-2145

Renesas Technology Malaysia Sdn. Bhd.
Unit 906, Block B, Menara Amcorp, Amcorp Trade Centre, No.18, Jalan Persiaran Barat, 46050 Petaling Jaya, Selangor Darul Ehsan, Malaysia
Tel: <603> 7955-9390, Fax: <603> 7955-9510

Colophon .3.0