HAF2017(L), HAF2017(S)

Silicon N Channel Power MOS FET
Power Switching

REJ03G0234-0200Z
(Previous ADE-208-1637 (Z))
Rev.2.00
Apr.13.2004

Descriptions

This FET has the over temperature shutdown capability sensing the junction temperature. This FET has the built-in over temperature shutdown circuit in the gate area. And this circuit operation to shutdown the gate voltage in case of high junction temperature like applying over power consumption, over current etc..

Features

- Logic level operation (4 to 6 V Gate drive)
- High endurance capability against to the short circuit
- Built-in the over temperature shutdown circuit
- Latch type shutdown operation (Need 0 voltage recovery)

Outline

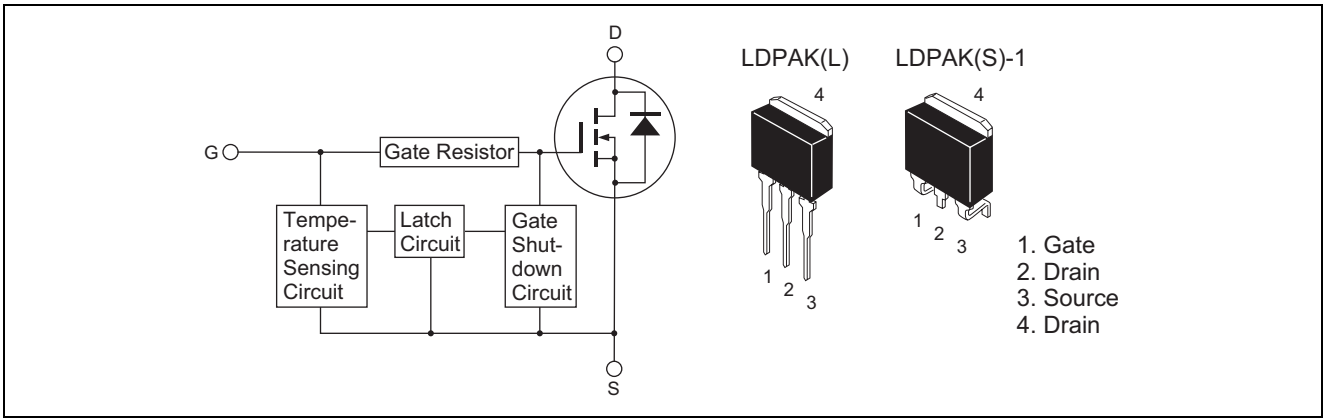

Absolute Maximum Ratings

(Ta = 25°C)

Item	Symbol	Rating	Unit
Drain to source voltage	V_{DSS}	60	V
Gate to source voltage	V_{GSS}	16	V
Gate to source voltage	V_{GSS}	–2.5	V
Drain current	I_D	20	A
Drain peak current	I_D (pulse) Note1	40	A
Body-drain diode reverse drain current	I_{DR}	20	A
Channel dissipation	Pch Note2	50	W
Channel temperature	Tch	150	°C
Storage temperature	Tstg	–55 to +150	°C

Notes: 1. PW ≤ 10µs, duty cycle ≤ 1%
2. Value at Tch = 25°C

Typical Operation Characteristics

(Ta = 25°C)

Item	Symbol	Min	Typ	Max	Unit	Test Conditions
Input voltage	V_{IH}	3.5	—	—	V	
Input voltage	V_{IL}	—	—	1.2	V	
Input current (Gate non shut down)	I_{IH1}	—	—	100	µA	Vi = 8V, V_{DS} =0
Input current (Gate non shut down)	I_{IH2}	—	—	50	µA	Vi = 3.5V, V_{DS} =0
Input current (Gate non shut down)	I_{IL}	—	—	1	µA	Vi = 1.2V, V_{DS} =0
Input current (Gate shut down)	$I_{IH(sd)1}$	—	0.8	—	mA	Vi = 8V, V_{DS} =0
Input current (Gate shut down)	$I_{IH(sd)2}$	—	0.35	—	mA	Vi = 3.5V, V_{DS} =0
Shutdown temperature	Tsd	—	175	—	°C	Channel temperature
Gate operation voltage	V_{OP}	3.5	—	12	V	

Electrical Characteristics

(Ta = 25°C)

Item	Symbol	Min	Typ	Max	Unit	Test conditions
Darin current	I_{D1}	1	—	—	A	V_{GS} = 3.5 V, V_{DS} = 2 V
Darin current	I_{D2}	—	—	10	mA	V_{GS} = 1.2 V, V_{DS} = 2 V
Drain to source breakdown voltage	$V_{(BR)DSS}$	60	—	—	V	I_D = 10 mA, V_{GS} =0
Gate to source breakdown voltage	$V_{(BR)GSS}$	16	—	—	V	I_G = 800 µA, V_{DS} =0
	$V_{(BR)GSS}$	–2.5	—	—	V	I_G = –100 µA, V_{DS} =0
Gate to source leak current	I_{GSS1}	—	—	100	µA	V_{GS} = 8 V, V_{DS} =0
	I_{GSS2}	—	—	50	µA	V_{GS} = 3.5 V, V_{DS} =0
	I_{GSS3}	—	—	1	µA	V_{GS} = 1.2 V, V_{DS} =0
	I_{GSS4}	—	—	–100	µA	V_{GS} = –2.4 V, V_{DS} =0
Input current (shut down)	$I_{GS(OP)1}$	—	0.8	—	mA	V_{GS} = 8 V, V_{DS} =0
	$I_{GS(OP)2}$	—	0.35	—	mA	V_{GS} = 3.5 V, V_{DS} =0
Zero gate voltage drain current	I_{DSS}	—	—	10	µA	V_{DS} = 60 V, V_{GS} = 0
Gate to source cutoff voltage	$V_{GS(off)}$	1.4	—	2.6	V	V_{DS} = 10 V, I_D = 1 mA
Forward transfer admittance	$\|y_{fs}\|$	6	21	—	S	I_D =10 A, V_{DS} =10 V[Note3]
Static drain to source on state resistance	$R_{DS(on)}$	—	35	53	mΩ	I_D = 10 A, V_{GS} = 4.5 V[Note3]
	$R_{DS(on)}$	—	27	43	mΩ	I_D = 10 A, V_{GS} = 10 V[Note3]
Output capacitance	Coss	—	460	—	pF	V_{DS} = 10 V, V_{GS} =0, f = 1 MHz
Turn-on delay time	td(on)	—	8.7	—	µs	V_{GS} = 5 V, I_D= 10 A, R_L = 3 Ω
Rise time	tr	—	44.6	—	µs	
Turn-off delay time	td(off)	—	2	—	µs	
Fall time	tf	—	2.6	—	µs	
Body-drain diode forward voltage	V_{DF}	—	0.9	—	V	I_F = 20A, V_{GS} = 0
Body-drain diode reverse recovery time	trr	—	120	—	ns	I_F = 20 A, V_{GS} = 0, diF/dt = 50 A/µs
Over load shut down operation time[Note4]	t_{os1}	—	0.97	—	ms	V_{GS} = 5 V, V_{DD} = 16 V
	t_{os2}	—	0.57	—	ms	V_{GS} = 5 V, V_{DD} = 24 V

Notes: 3. Pulse test
4. Include the time shift based on increasing of channel temperature when operate under over load condition.

Main Characteristics

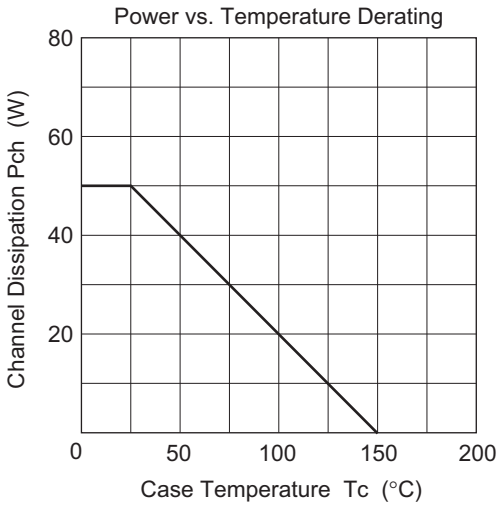

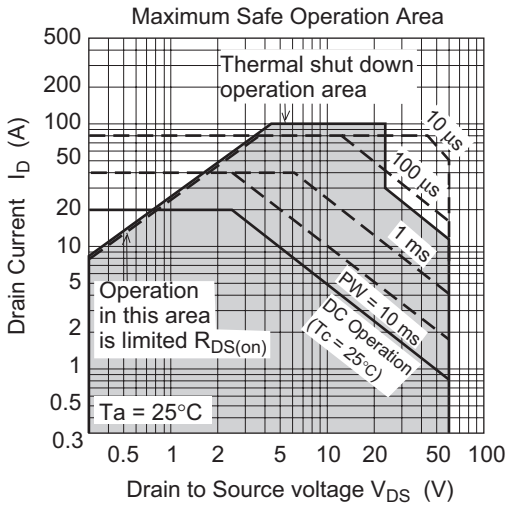

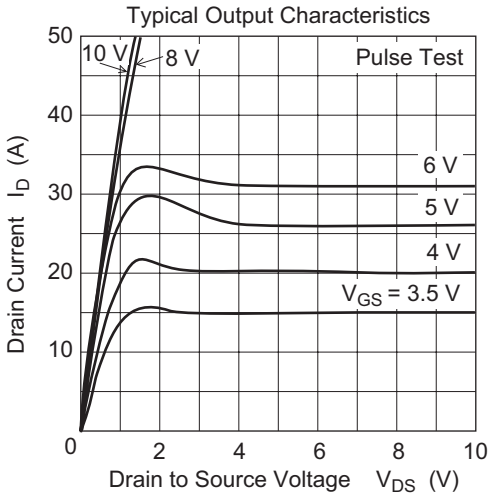

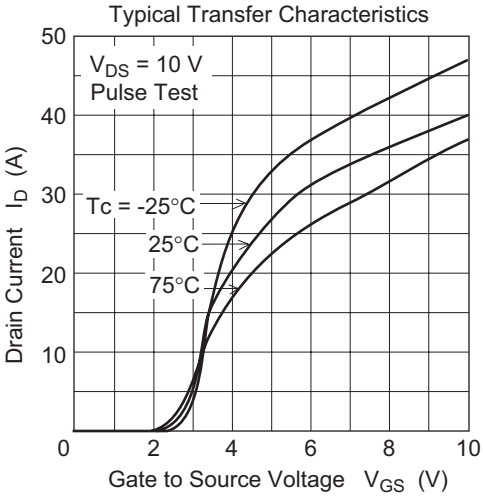

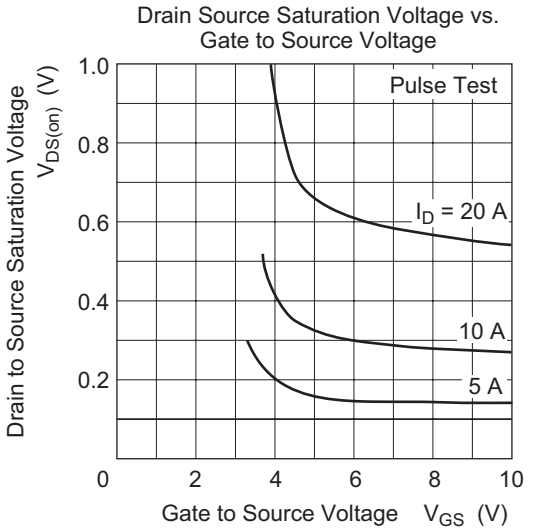

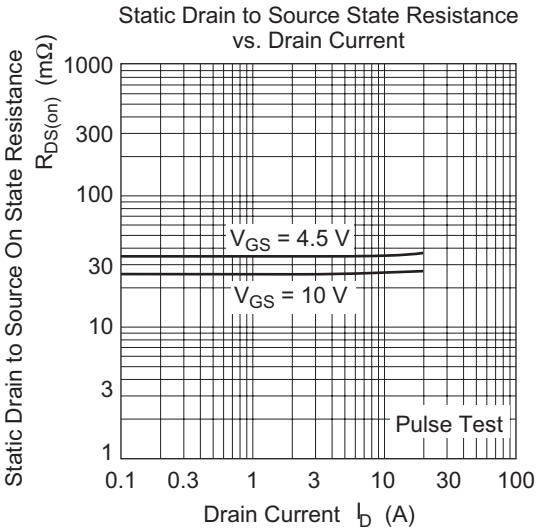

Static Drain to Source on State Resistance vs. Temperature

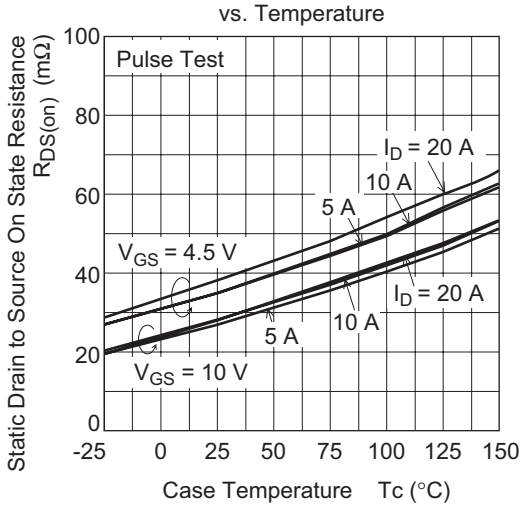

Forward Transfer Admittance vs. Drain Current

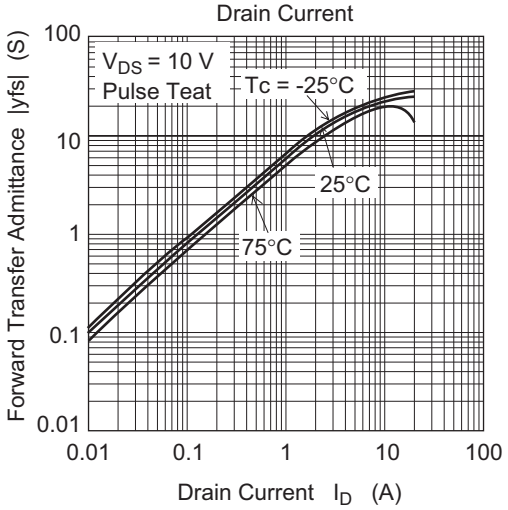

Body-Drain Diode Reverse Recovery Time

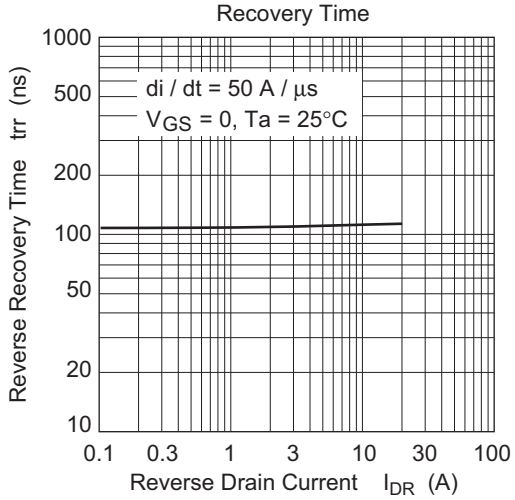

Switching Characteristics

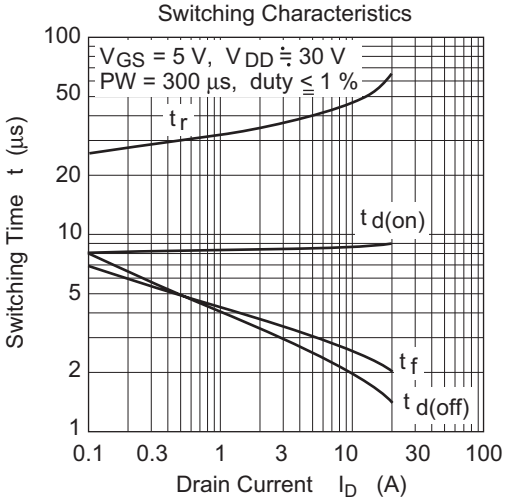

Reverse Drain Current vs. Source to Drain Voltage

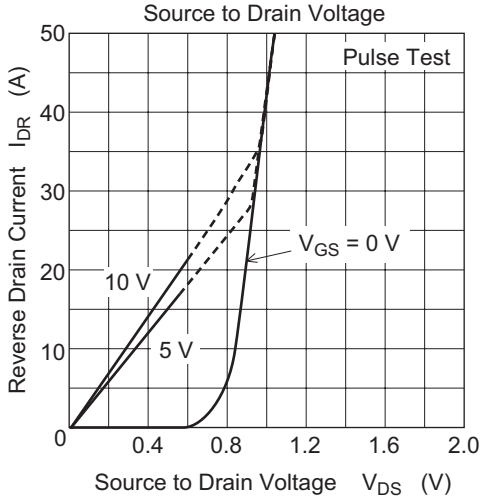

Typical Capacitance vs. Drain to Source Voltage

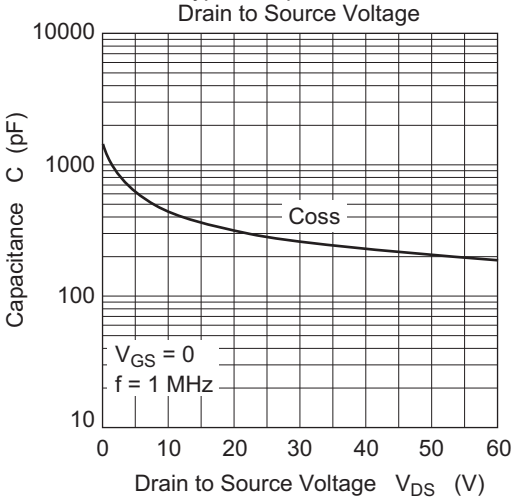

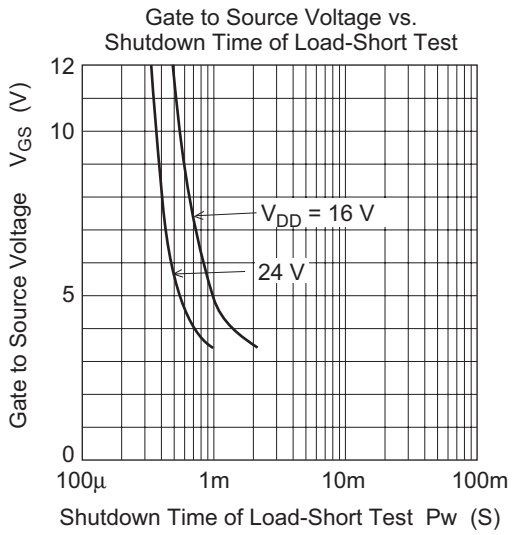
Gate to Source Voltage vs.
Shutdown Time of Load-Short Test
Gate to Source Voltage VGS (V)
12
10
5
0
VDD = 16 V
24 V
100μ
1m
10m
100m
Shutdown Time of Load-Short Test Pw (S)

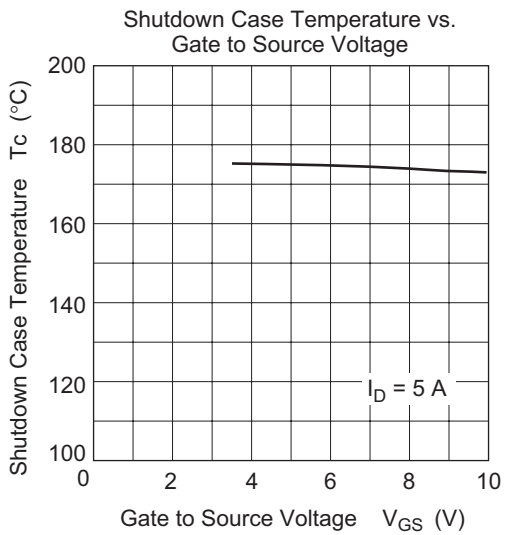
Shutdown Case Temperature vs.
Gate to Source Voltage
Shutdown Case Temperature Tc (°C)
200
180
160
140
120
100
ID = 5 A
0
2
4
6
8
10
Gate to Source Voltage VGS (V)

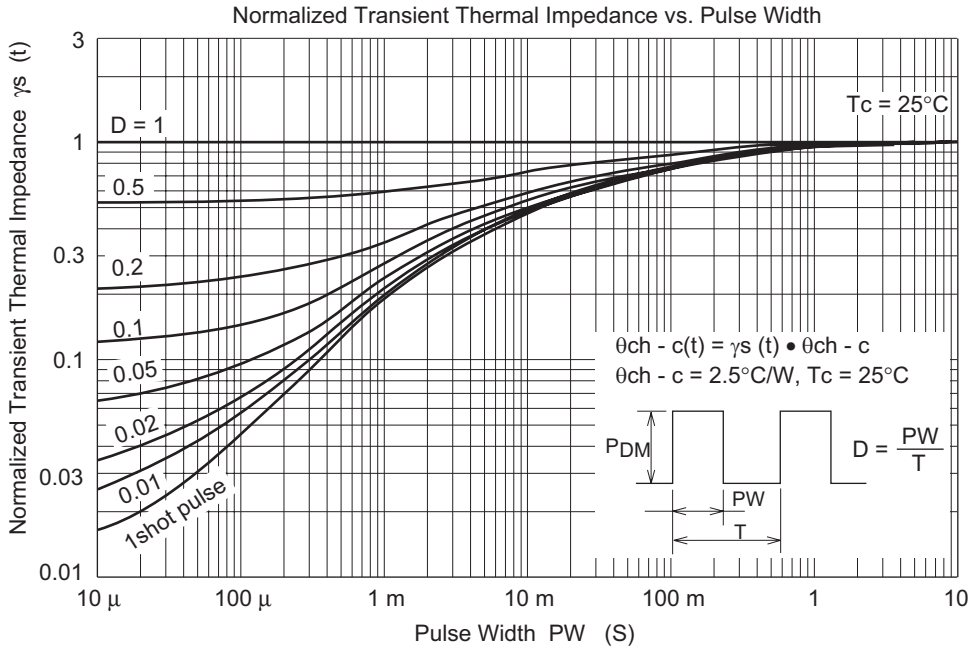
Normalized Transient Thermal Impedance vs. Pulse Width
Normalized Transient Thermal Impedance γs (t)
3
1
0.3
0.1
0.03
0.01
D = 1
0.5
0.2
0.1
0.05
0.02
0.01
1shot pulse
Tc = 25°C
θch - c(t) = γs (t) • θch - c
θch - c = 2.5°C/W, Tc = 25°C
PDM
D = PW/T
PW
T
10 μ
100 μ
1 m
10 m
100 m
1
10
Pulse Width PW (S)

Package Dimensions

As of January, 2003

Unit: mm

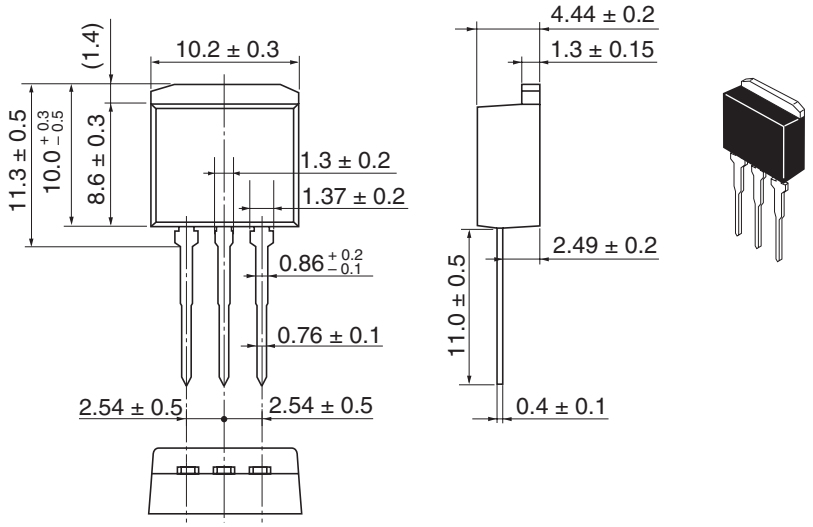

Package Code	LDPAK (L)
JEDEC	—
JEITA	—
Mass (reference value)	1.40 g

As of January, 2003

Unit: mm

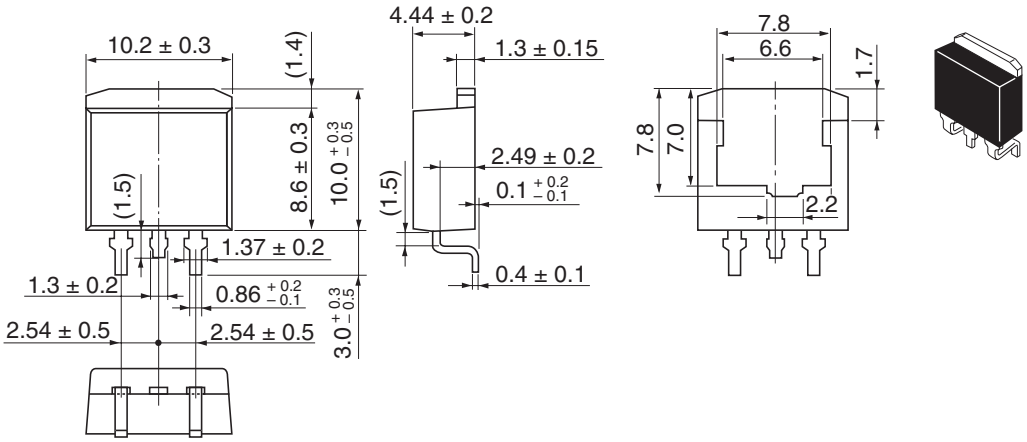

Package Code	LDPAK (S)-(1)
JEDEC	—
JEITA	—
Mass (reference value)	1.30 g

Ordering Information

Part Name	Quantity	Shipping Container
HAF2017-90L	Max: 50 pcs/ sack	Sack
HAF2017-90S	Max: 50 pcs/ sack	Sack
HAF2017-90STL	1000 pcs/ Reel	Embossed tape
HAF2017-90STR	1000 pcs/ Reel	Embossed tape

Note: For some grades, production may be terminated. Please contact the Renesas sales office to check the state of production before ordering the product.

Renesas Technology Corp. Sales Strategic Planning Div. Nippon Bldg., 2-6-2, Ohte-machi, Chiyoda-ku, Tokyo 100-0004, Japan

RENESAS SALES OFFICES

http://www.renesas.com

Renesas Technology America, Inc.
450 Holger Way, San Jose, CA 95134-1368, U.S.A
Tel: <1> (408) 382-7500 Fax: <1> (408) 382-7501

Renesas Technology Europe Limited.
Dukes Meadow, Millboard Road, Bourne End, Buckinghamshire, SL8 5FH, United Kingdom
Tel: <44> (1628) 585 100, Fax: <44> (1628) 585 900

Renesas Technology Europe GmbH
Dornacher Str. 3, D-85622 Feldkirchen, Germany
Tel: <49> (89) 380 70 0, Fax: <49> (89) 929 30 11

Renesas Technology Hong Kong Ltd.
7/F., North Tower, World Finance Centre, Harbour City, Canton Road, Hong Kong
Tel: <852> 2265-6688, Fax: <852> 2375-6836

Renesas Technology Taiwan Co., Ltd.
FL 10, #99, Fu-Hsing N. Rd., Taipei, Taiwan
Tel: <886> (2) 2715-2888, Fax: <886> (2) 2713-2999

Renesas Technology (Shanghai) Co., Ltd.
26/F., Ruijin Building, No.205 Maoming Road (S), Shanghai 200020, China
Tel: <86> (21) 6472-1001, Fax: <86> (21) 6415-2952

Renesas Technology Singapore Pte. Ltd.
1, Harbour Front Avenue, #06-10, Keppel Bay Tower, Singapore 098632
Tel: <65> 6213-0200, Fax: <65> 6278-8001

Colophon .1.0