BTA/BTB06 Series

SNUBBERLESS™, LOGIC LEVEL & STANDARD

6A TRIACs

MAIN FEATURES:

Symbol	Value	Unit
$I_{T(RMS)}$	6	A
V_{DRM}/V_{RRM}	600 and 800	V
$I_{G\ (Q_1)}$	5 to 50	mA

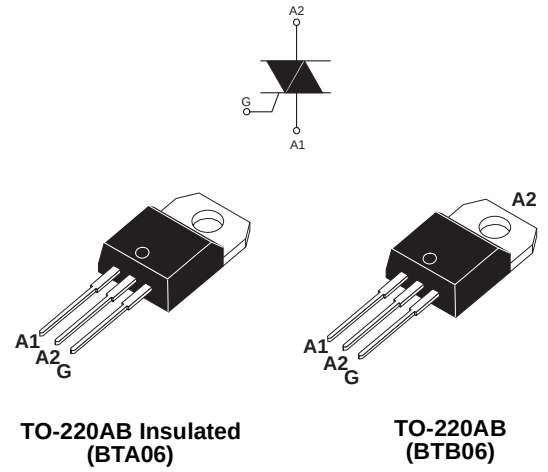

TO-220AB Insulated (BTA06)

TO-220AB (BTB06)

DESCRIPTION

Suitable for AC switching operations, the BTA/BTB06 series can be used as an ON/OFF function in applications such as static relays, heating regulation, induction motor starting circuits... or for phase control in light dimmers, motor speed controllers,...

The snubberless and logic level versions (BTA/BTB...W) are specially recommended for use on inductive loads, thanks to their high commutation performances. By using an internal ceramic pad, the BTA series provides voltage insulated tab (rated at 2500V RMS) complying with UL standards (File ref.: E81734)

ABSOLUTE MAXIMUM RATINGS

Symbol	Parameter			Value	Unit
$I_{T(RMS)}$	RMS on-state current (full sine wave)	TO-220AB	Tc = 110°C	6	A
		TO-220AB Ins.	Tc = 105°C		
I_{TSM}	Non repetitive surge peak on-state current (full cycle, Tj initial = 25°C)	F = 50 Hz	t = 20 ms	60	A
		F = 60 Hz	t = 16.7 ms	63	
I^2t	I^2t Value for fusing	tp = 10 ms		21	A^2s
dI/dt	Critical rate of rise of on-state current $I_G = 2 \times I_{GT}$, tr ≤ 100 ns	F = 120 Hz	Tj = 125°C	50	A/µs
I_{GM}	Peak gate current	tp = 20 µs	Tj = 125°C	4	A
$P_{G(AV)}$	Average gate power dissipation		Tj = 125°C	1	W
T_{stg} T_j	Storage junction temperature range Operating junction temperature range			- 40 to + 150 - 40 to + 125	°C

ELECTRICAL CHARACTERISTICS (Tj = 25°C, unless otherwise specified)

■ **SNUBBERLESS™ and LOGIC LEVEL (3 Quadrants)**

Symbol	Test Conditions	Quadrant		BTA/BTB06				Unit
				TW	SW	CW	BW	
I_{GT} (1)	V_D = 12 V R_L = 30 Ω	I - II - III	MAX.	5	10	35	50	mA
V_{GT}		I - II - III	MAX.	1.3				V
V_{GD}	$V_D = V_{DRM}$ R_L = 3.3 kΩ Tj = 125°C	I - II - III	MIN.	0.2				V
I_H (2)	I_T = 100 mA		MAX.	10	15	35	50	mA
I_L	$I_G = 1.2\ I_{GT}$	I - III	MAX.	10	25	50	70	mA
		II		15	30	60	80	
dV/dt (2)	V_D = 67 %V_{DRM} gate open Tj = 125°C		MIN.	20	40	400	1000	V/µs
(dI/dt)c (2)	(dV/dt)c = 0.1 V/µs Tj = 125°C		MIN.	2.7	3.5	-	-	A/ms
	(dV/dt)c = 10 V/µs Tj = 125°C			1.2	2.4	-	-	
	Without snubber Tj = 125°C			-	-	3.5	5.3	

■ **STANDARD (4 Quadrants)**

Symbol	Test Conditions	Quadrant		BTA/BTB06		Unit
				C	B	
I_G (1)	V_D = 12 V R_L = 30 Ω	I - II - III IV	MAX.	25 50	50 100	mA
V_{GT}		ALL	MAX.	1.3		V
V_{GD}	$V_D = V_{DRM}$ R_L = 3.3 kΩ Tj = 125°C	ALL	MIN.	0.2		V
I_H (2)	I_T = 500 mA		MAX.	25	50	mA
I_L	$I_G = 1.2\ I_{GT}$	I - III - IV	MAX.	40	50	mA
		II		80	100	
dV/dt (2)	V_D = 67 %V_{DRM} gate open Tj = 125°C		MIN.	200	400	V/µs
(dV/dt)c (2)	(dI/dt)c = 2.7 A/ms Tj = 125°C		MIN.	5	10	V/µs

STATIC CHARACTERISTICS

Symbol	Test Conditions			Value	Unit
V_T (2)	I_{TM} = 5.5 A tp = 380 µs	Tj = 25°C	MAX.	1.55	V
V_{to} (2)	Threshold voltage	Tj = 125°C	MAX.	0.85	V
R_d (2)	Dynamic resistance	Tj = 125°C	MAX.	60	mΩ
I_{DRM}	$V_{DRM} = V_{RRM}$	Tj = 25°C	MAX.	5	µA
I_{RRM}		Tj = 125°C		1	mA

Note 1: minimum IGT is guaranted at 5% of IGT max.

Note 2: for both polarities of A2 referenced to A1

THERMAL RESISTANCES

Symbol	Parameter		Value	Unit
$R_{th(j-c)}$	Junction to case (AC)	TO-220AB	1.8	°C/W
		TO-220AB Insulated	2.7	
$R_{th(j-a)}$	Junction to ambient	TO-220AB TO-220AB Insulated	60	°C/W

PRODUCT SELECTOR

Part Number	Voltage (xxx)		Sensitivity	Type	Package
	600 V	800 V			
BTA/BTB06-xxxB	X	X	50 mA	Standard	TO-220AB
BTA/BTB06-xxxBW	X	X	50 mA	Snubberless	TO-220AB
BTA/BTB06-xxxC	X	X	25 mA	Standard	TO-220AB
BTA/BTB06-xxxCW	X	X	35 mA	Snubberless	TO-220AB
BTA/BTB06-xxxSW	X	X	10 mA	Logic level	TO-220AB
BTA/BTB06-xxxTW	X	X	5 mA	Logic level	TO-220AB

BTB: non insulated TO-220AB package

ORDERING INFORMATION

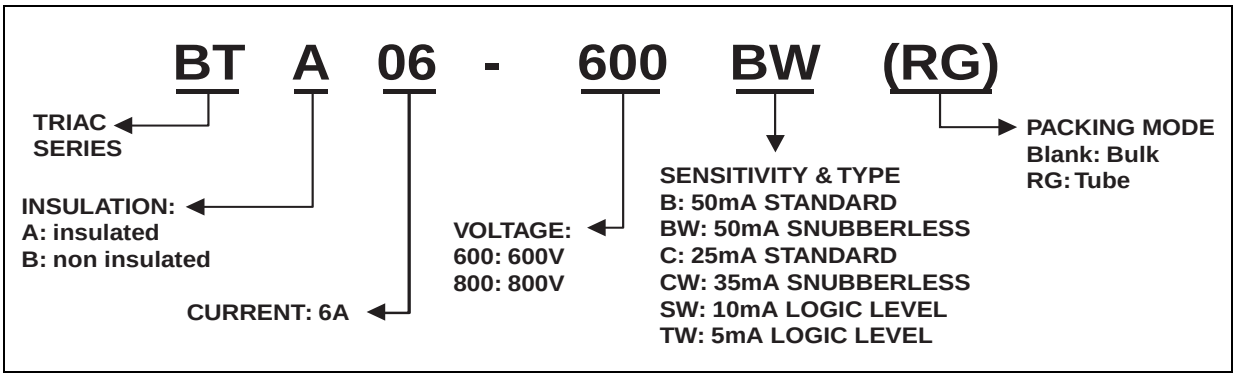

OTHER INFORMATION

Part Number	Marking	Weight	Base quantity	Packing mode
BTA/BTB06-xxxyz	BTA/BTB06-xxxyz	2.3 g	250	Bulk
BTA/BTB06-xxxyzRG	BTA/BTB06-xxxyz	2.3 g	50	Tube

Note: xxx = voltage, y = sensitivity, z = type

Fig. 1: Maximum power dissipation versus RMS on-state current (full cycle).

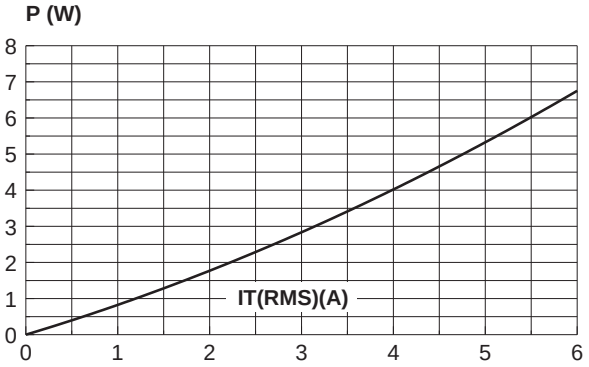

Fig. 2: RMS on-state current versus case temperature (full cycle).

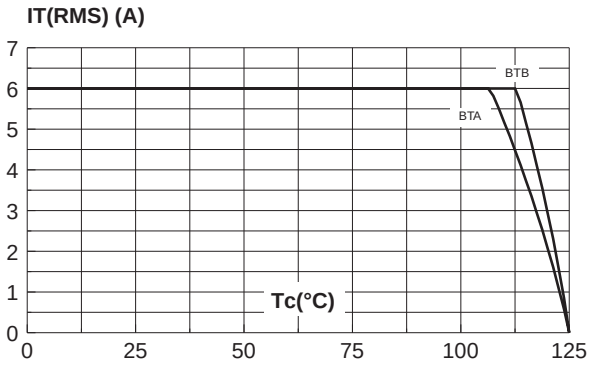

Fig. 3: Relative variation of thermal impedance versus pulse duration.

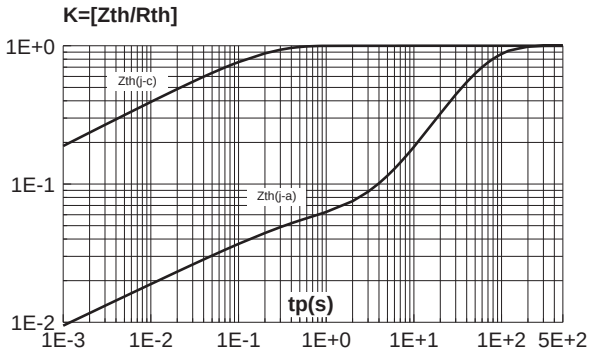

Fig. 4: On-state characteristics (maximum values).

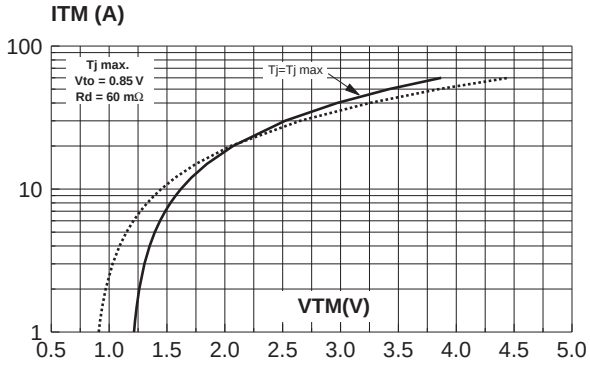

Fig. 5: Surge peak on-state current versus number of cycles.

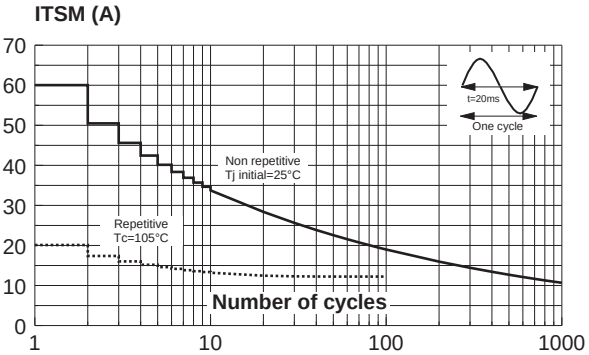

Fig. 6: Non-repetitive surge peak on-state current for a sinusoidal pulse with width tp < 10ms, and corresponding value of I²t.

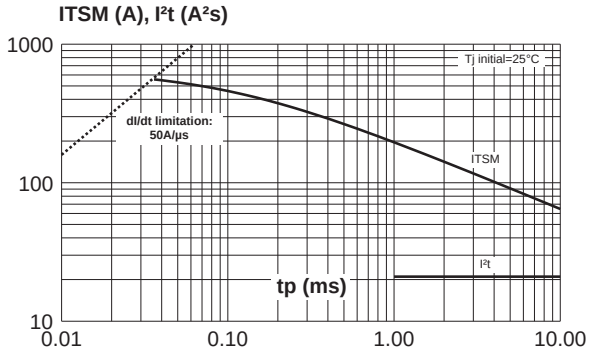

Fig. 7: Relative variation of gate trigger current, holding current and latching current versus junction temperature (typical values).

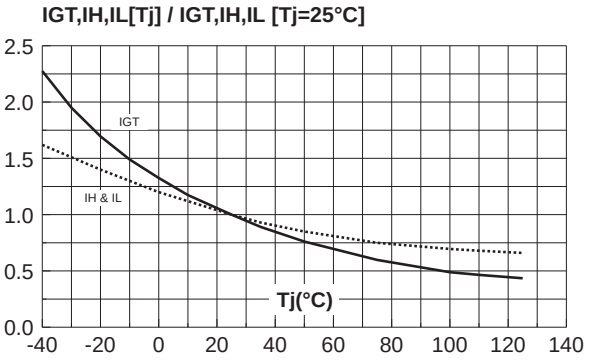

Fig. 8-1: Relative variation of critical rate of decrease of main current versus (dV/dt)c (typical values). Snubberless & Logic Level Types

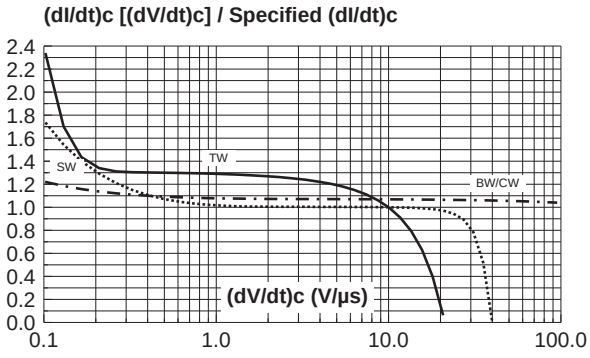

Fig. 8-2: Relative variation of critical rate of decrease of main current versus (dV/dt)c (typical values). Standard Types

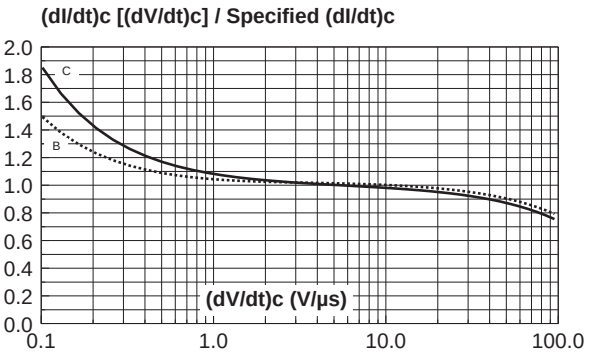

Fig. 9: Relative variation of critical rate of decrease of main current versus junction temperature.

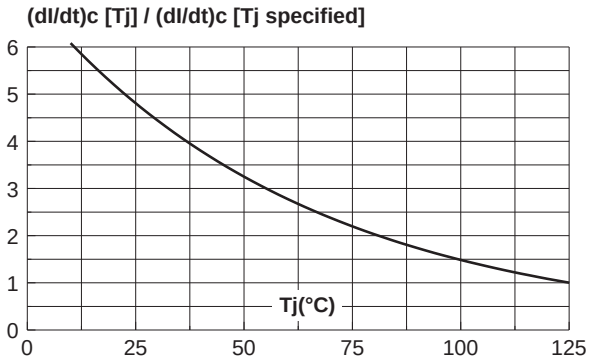

PACKAGE MECHANICAL DATA

TO-220AB / TO-220AB Ins.

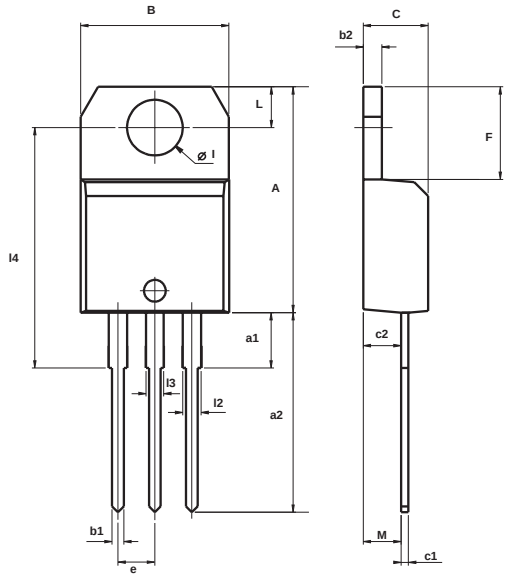

REF.	DIMENSIONS					
	Millimeters			Inches		
	Min.	Typ.	Max.	Min.	Typ.	Max.
A	15.20		15.90	0.598		0.625
a1		3.75			0.147	
a2	13.00		14.00	0.511		0.551
B	10.00		10.40	0.393		0.409
b1	0.61		0.88	0.024		0.034
b2	1.23		1.32	0.048		0.051
C	4.40		4.60	0.173		0.181
c1	0.49		0.70	0.019		0.027
c2	2.40		2.72	0.094		0.107
e	2.40		2.70	0.094		0.106
F	6.20		6.60	0.244		0.259
I	3.75		3.85	0.147		0.151
l4	15.80	16.40	16.80	0.622	0.646	0.661
L	2.65		2.95	0.104		0.116
l2	1.14		1.70	0.044		0.066
l3	1.14		1.70	0.044		0.066
M		2.60			0.102	

Information furnished is believed to be accurate and reliable. However, STMicroelectronics assumes no responsibility for the consequences of use of such information nor for any infringement of patents or other rights of third parties which may result from its use. No license is granted by implication or otherwise under any patent or patent rights of STMicroelectronics. Specifications mentioned in this publication are subject to change without notice. This publication supersedes and replaces all information previously supplied. STMicroelectronics products are not authorized for use as critical components in life support devices or systems without express written approval of STMicroelectronics.

© The ST logo is a registered trademark of STMicroelectronics

© 2002 STMicroelectronics - Printed in Italy - All Rights Reserved

STMicroelectronics GROUP OF COMPANIES
Australia - Brazil - Canada - China - Finland - France - Germany
Hong Kong - India - Isreal - Italy - Japan - Malaysia - Malta - Morocco - Singapore
Spain - Sweden - Switzerland - United Kingdom - United States.

http://www.st.com