LF00 SERIES

VERY LOW DROP VOLTAGE REGULATORS WITH INHIBIT

- VERY LOW DROPOUT VOLTAGE (0.45V)
- VERY LOW QUIESCENT CURRENT (TYP. 50 µA IN OFF MODE, 500 µA IN ON MODE)
- OUTPUT CURRENT UP TO 500 mA
- LOGIC-CONTROLLED ELECTRONIC SHUTDOWN
- OUTPUT VOLTAGES OF 1.25; 1.5; 1.8; 2.5; 2.7; 3; 3.3; 3.5; 4; 4.5; 4.7; 5; 5.2; 5.5; 6; 8; 8.5; 9; 12V
- INTERNAL CURRENT AND THERMAL LIMIT
- ONLY 2.2 µF FOR STABILITY
- AVAILABLE IN ± 1% (AB) OR ± 2% (C) SELECTION AT 25 °C
- SUPPLY VOLTAGE REJECTION: 80db (TYP.)
- TEMPERATURE RANGE: -40 TO 125 °C

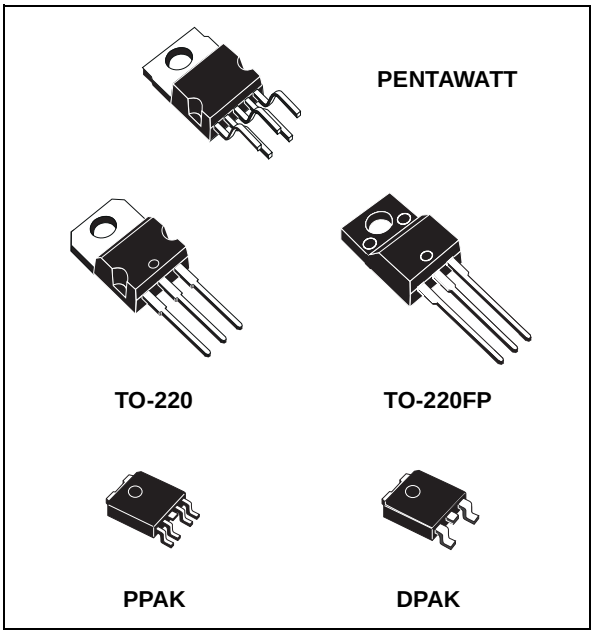

DESCRIPTION

The LF00 series are very Low Drop regulators available in PENTAWATT, TO-220, TO-220FP, DPAK and PPAK package and in a wide range of output voltages.

The very Low Drop voltage (0.45V) and the very low quiescent current make them particularly suitable for Low Noise, Low Power applications and specially in battery powered systems.

In the 5 pins configuration (PENTAWATT and PPAK) a Shutdown Logic Control function is available (pin 2, TTL compatible). This means that when the device is used as a local regulator, it is possible to put a part of the board in standby, decreasing the total power consumption. In the three terminal configuration the device has the same electrical performance, but is fixed in the ON state. It requires only a 2.2 µF capacitor for stability allowing space and cost saving.

SCHEMATIC DIAGRAM

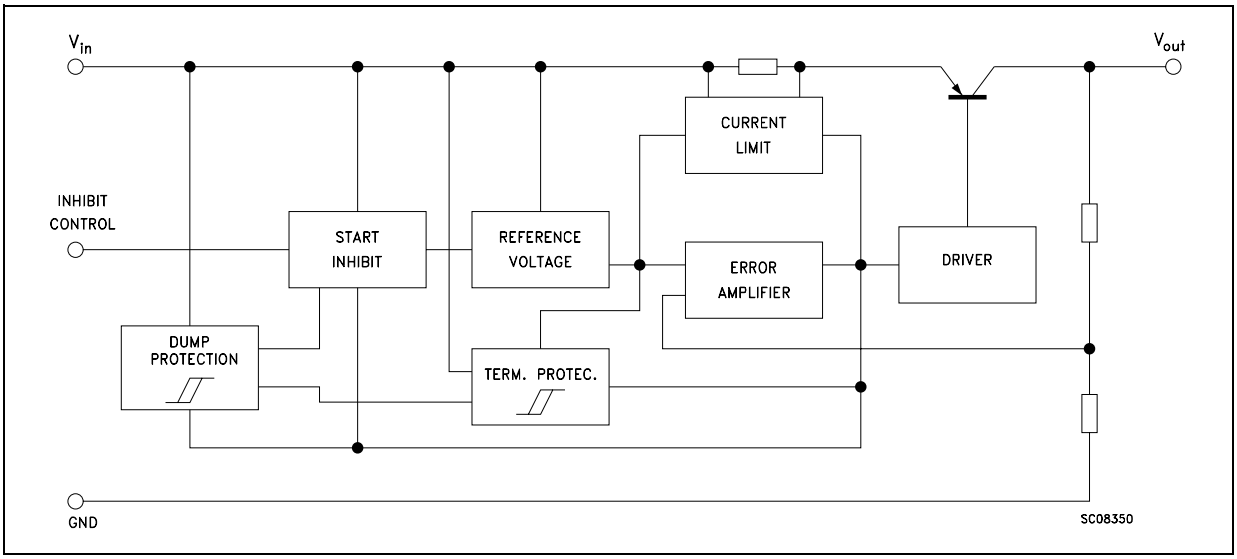

ABSOLUTE MAXIMUM RATINGS

Symbol	Parameter	Value	Unit
V_I	DC Input Voltage	-0.5 to 40 (*)	V
I_O	Output Current	Internally Limited	
P_{tot}	Power Dissipation	Internally Limited	
T_{stg}	Storage Temperature Range	-40 to 150	°C
T_{op}	Operating Junction Temperature Range	-40 to 125	°C

(*) For 18 < V_{IN} < 40 the regulator is in shut-down

THERMAL DATA

Symbol	Parameter	PENTAWATT	TO-220	TO-220FP	DPAK/PPAK	Unit
$R_{thj\text{-}case}$	Thermal Resistance Junction-case	3	3	5	8	°C/W
$R_{thj\text{-}amb}$	Thermal Resistance Junction-ambient	50	50	60	100	°C/W

CONNECTION DIAGRAM (top view)

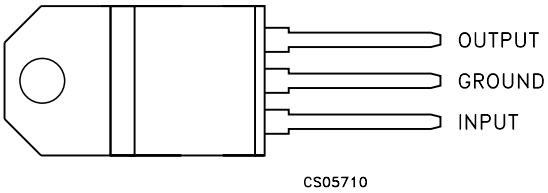

TO-220

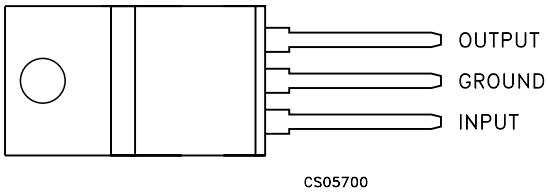

TO-220FP

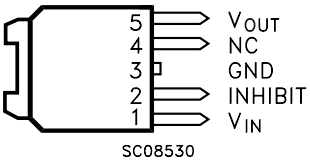

PPAK

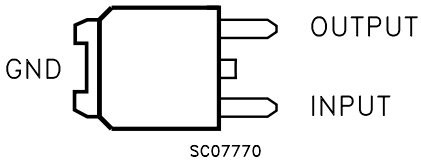

DPAK

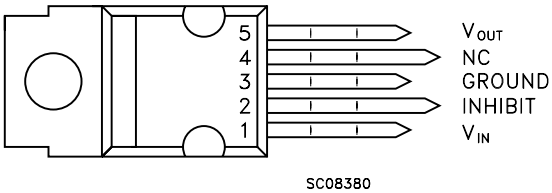

PENTAWATT

ORDERING CODES

TYPE	PENTAWATT	TO-220	TO-220FP	DPAK (#)	PPAK (#)	OUTPUT VOLTAGE
LF12C (*)	LF12CV5V	LF12CV	LF12CP	LF12CDT	LF12CPT	1.25 V
LF12AB (*)	LF12ABV5V	LF12ABV	LF12ABP	LF12ABDT	LF12ABPT	1.25 V
LF15C	LF15CV5V (*)	LF15CV (*)	LF15CP (*)	LF15CDT	LF15CPT (*)	1.5 V
LF15AB	LF15ABV5V (*)	LF15ABV (*)	LF15ABP (*)	LF15ABDT	LF15ABPT (*)	1.5 V
LF18C	LF18CV5V	LF18CV	LF18CP	LF18CDT	LF18CPT	1.8 V
LF18AB	LF18ABV5V	LF18ABV	LF18ABP	LF18ABDT	LF18ABPT	1.8 V
LF25C	LF25CV5V	LF25CV	LF25CP	LF25CDT	LF25CPT	2.5 V
LF25AB	LF25ABV5V	LF25ABV	LF25ABP	LF25ABDT	LF25ABPT	2.5 V
LF27C	LF27CV5V	LF27CV	LF27CP	LF27CDT	LF27CPT	2.7 V
LF27AB	LF27ABV5V	LF27ABV	LF27ABP	LF27ABDT	LF27ABPT	2.7 V
LF30C	LF30CV5V	LF30CV	LF30CP	LF30CDT	LF30CPT	3 V
LF30AB	LF30ABV5V	LF30ABV	LF30ABP	LF30ABDT	LF30ABPT	3 V
LF33C	LF33CV5V	LF33CV	LF33CP	LF33CDT	LF33CPT	3.3 V
LF33AB	LF33ABV5V	LF33ABV	LF33ABP	LF33ABDT	LF33ABPT	3.3 V
LF35C	LF35CV5V	LF35CV	LF35CP	LF35CDT	LF35CPT	3.5 V
LF35AB	LF35ABV5V	LF35ABV	LF35ABP	LF35ABDT	LF35ABPT	3.5 V
LF40C	LF40CV5V	LF40CV	LF40CP	LF40CDT	LF40CPT	4 V
LF40AB	LF40ABV5V	LF40ABV	LF40ABP	LF40ABDT	LF40ABPT	4 V
LF45C (*)	LF45CV5V	LF45CV	LF45CP	LF45CDT	LF45CPT	4.5 V
LF45AB (*)	LF45ABV5V	LF45ABV	LF45ABP	LF45ABDT	LF45ABPT	4.5 V
LF47C	LF47CV5V	LF47CV	LF47CP	LF47CDT	LF47CPT	4.75 V
LF47AB	LF47ABV5V	LF47ABV	LF47ABP	LF47ABDT	LF47ABPT	4.75 V
LF50C	LF50CV5V	LF50CV	LF50CP	LF50CDT	LF50CPT	5 V
LF50AB	LF50ABV5V	LF50ABV	LF50ABP	LF50ABDT	LF50ABPT	5 V
LF52C	LF52CV5V	LF52CV	LF52CP	LF52CDT	LF52CPT	5.2 V
LF52AB	LF52ABV5V	LF52ABV	LF52ABP	LF52ABDT	LF52ABPT	5.2 V
LF55C	LF55CV5V	LF55CV	LF55CP	LF55CDT	LF55CPT	5.5 V
LF55AB	LF55ABV5V	LF55ABV	LF55ABP	LF55ABDT	LF55ABPT	5.5 V
LF60C	LF60CV5V	LF60CV	LF60CP	LF60CDT	LF60CPT	6 V
LF60AB	LF60ABV5V	LF60ABV	LF60ABP	LF60ABDT	LF60ABPT	6 V
LF80C	LF80CV5V	LF80CV	LF80CP	LF80CDT	LF80CPT	8 V
LF80AB	LF80ABV5V	LF80ABV	LF80ABP	LF80ABDT	LF80ABPT	8 V
LF85C	LF85CV5V	LF85CV	LF85CP	LF85CDT	LF85CPT	8.5 V
LF85AB	LF85ABV5V	LF85ABV	LF85ABP	LF85ABDT	LF85ABPT	8.5 V
LF90C	LF90CV5V	LF90CV	LF90CP	LF90CDT	LF90CPT	9 V
LF90AB	LF90ABV5V	LF90ABV	LF90ABP	LF90ABDT	LF90ABPT	9 V
LF120C	LF120CV5V	LF120CV	LF120CP	LF120CDT	LF120CPT	12 V
LF120AB	LF120ABV5V	LF120ABV	LF120ABP	LF120ABDT	LF120ABPT	12 V

(*) Available on request.
(#) Available in Tape & Reel with the suffix "-TR".

TEST CIRCUITS

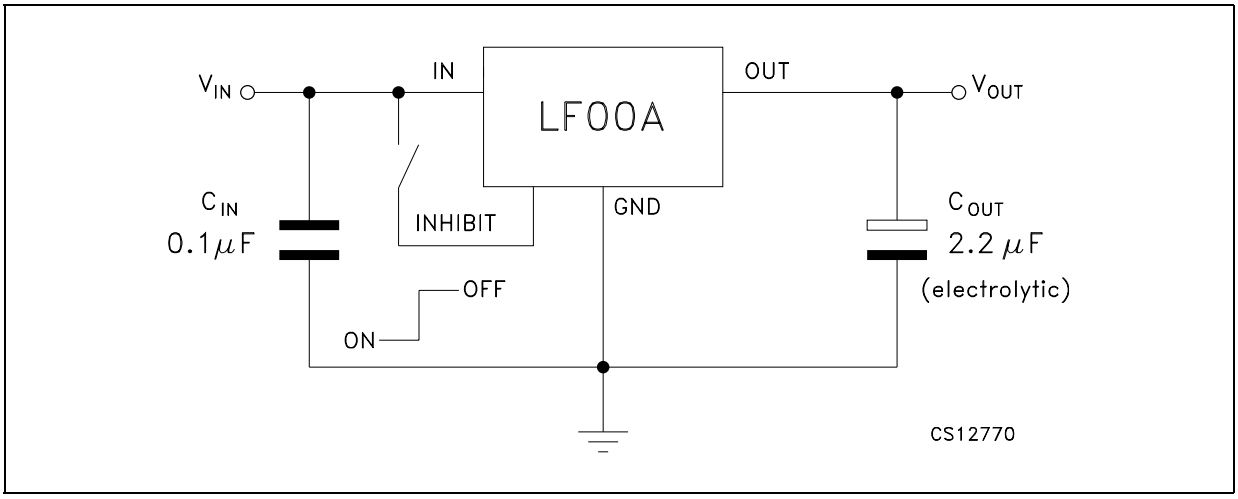

ELECTRICAL CHARACTERISTICS FOR LF12AB (refer to the test circuits, T_j = 25°C, C_I = 0.1 µF, C_O = 2.2 µF unless otherwise specified.)

Symbol	Parameter	Test Conditions		Min.	Typ.	Max.	Unit
V_O	Output Voltage	I_O = 50 mA, V_I = 3.3 V		1.238	1.25	1.263	V
		I_O = 50 mA, V_I = 3.3 V, T_a = -25 to 85°C		1.225		1.275	
V_I	Operating Input Voltage	I_O = 500 mA		2.5		16	V
I_O	Output Current Limit				1		A
ΔV_O	Line Regulation	V_I = 2.5 to 16 V, I_O = 5 mA			2	10	mV
ΔV_O	Load Regulation	V_I = 2.8 V I_O = 5 to 500 mA			2	10	mV
I_d	Quiescent Current	V_I = 2.5 to 16V, I_O = 0mA	ON MODE		0.5	1	mA
		V_I = 2.6 to 16V, I_O = 500mA				12	
		V_I = 6 V	OFF MODE		50	100	µA
SVR	Supply Voltage Rejection	I_O = 5 mA V_I = 3.5 ± 1 V	f = 120 Hz		82		dB
			f = 1 KHz		77		
			f = 10 KHz		65		
eN	Output Noise Voltage	B = 10 Hz to 100 KHz			50		µV
V_d	Dropout Voltage	I_O = 200 mA			1.25		V
V_{IL}	Control Input Logic Low	T_a = -40 to 125°C				0.8	V
V_{IH}	Control Input Logic High	T_a = -40 to 125°C		2			V
I_I	Control Input Current	V_I = 6 V, V_C = 6 V			10		µA
C_O	Output Bypass Capacitance	ESR = 0.1 to 10 Ω I_O = 0 to 500 mA		2	10		µF

ELECTRICAL CHARACTERISTICS FOR LF12C (refer to the test circuits, T_j = 25°C, C_I = 0.1 µF, C_O = 2.2 µF unless otherwise specified.)

Symbol	Parameter	Test Conditions		Min.	Typ.	Max.	Unit
V_O	Output Voltage	I_O = 50 mA, V_I = 3.3 V		1.225	1.25	1.275	V
		I_O = 50 mA, V_I = 3.3 V, T_a = -25 to 85°C		1.2		1.3	
V_I	Operating Input Voltage	I_O = 500 mA		2.5		16	V
I_O	Output Current Limit				1		A
ΔV_O	Line Regulation	V_I = 2.5 to 16 V, I_O = 5 mA			2	10	mV
ΔV_O	Load Regulation	V_I = 2.8 V I_O = 5 to 500 mA			2	10	mV
I_d	Quiescent Current	V_I = 2.5 to 16V, I_O = 0mA	ON MODE		0.5	1	mA
		V_I = 2.6 to 16V, I_O = 500mA				12	
		V_I = 6 V	OFF MODE		50	100	µA
SVR	Supply Voltage Rejection	I_O = 5 mA V_I = 3.5 ± 1 V	f = 120 Hz		82		dB
			f = 1 KHz		77		
			f = 10 KHz		65		
eN	Output Noise Voltage	B = 10 Hz to 100 KHz			50		µV
V_d	Dropout Voltage	I_O = 200 mA			1.25		V
V_{IL}	Control Input Logic Low	T_a = -40 to 125°C				0.8	V
V_{IH}	Control Input Logic High	T_a = -40 to 125°C		2			V
I_I	Control Input Current	V_I = 6 V, V_C = 6 V			10		µA
C_O	Output Bypass Capacitance	ESR = 0.1 to 10 Ω I_O = 0 to 500 mA		2	10		µF

ELECTRICAL CHARACTERISTICS FOR LF15AB (refer to the test circuits, T_j = 25°C, C_I = 0.1 µF, C_O = 2.2 µF unless otherwise specified.)

Symbol	Parameter	Test Conditions		Min.	Typ.	Max.	Unit
V_O	Output Voltage	I_O = 50 mA, V_I = 3.5 V		1.485	1.5	1.515	V
		I_O = 50 mA, V_I = 3.5 V, T_a = -25 to 85°C		1.470		1.530	
V_I	Operating Input Voltage	I_O = 500 mA		2.5		16	V
I_O	Output Current Limit				1		A
ΔV_O	Line Regulation	V_I = 2.5 to 16 V, I_O = 5 mA			2	10	mV
ΔV_O	Load Regulation	V_I = 2.8 V, I_O = 5 to 500 mA			2	10	mV
I_d	Quiescent Current	V_I = 2.5 to 16V, I_O = 0mA	ON MODE		0.5	1	mA
		V_I = 2.8 to 16V, I_O = 500mA				12	
		V_I = 6 V	OFF MODE		50	100	µA
SVR	Supply Voltage Rejection	I_O = 5 mA V_I = 3.5 ± 1 V	f = 120 Hz		82		dB
			f = 1 KHz		77		
			f = 10 KHz		65		
eN	Output Noise Voltage	B = 10 Hz to 100 KHz			50		µV
V_d	Dropout Voltage	I_O = 200 mA			1		V
V_{IL}	Control Input Logic Low	T_a = -40 to 125°C				0.8	V
V_{IH}	Control Input Logic High	T_a = -40 to 125°C		2			V
I_I	Control Input Current	V_I = 6 V, V_C = 6 V			10		µA
C_O	Output Bypass Capacitance	ESR = 0.1 to 10 Ω I_O = 0 to 500 mA		2	10		µF

ELECTRICAL CHARACTERISTICS FOR LF15C (refer to the test circuits, T_j = 25°C, C_I = 0.1 µF, C_O = 2.2 µF unless otherwise specified.)

Symbol	Parameter	Test Conditions		Min.	Typ.	Max.	Unit
V_O	Output Voltage	I_O = 50 mA, V_I = 3.5 V		1.47	1.5	1.53	V
		I_O = 50 mA, V_I = 3.5 V, T_a = -25 to 85°C		1.44		1.56	
V_I	Operating Input Voltage	I_O = 500 mA		2.5		16	V
I_O	Output Current Limit				1		A
ΔV_O	Line Regulation	V_I = 2.5 to 16 V, I_O = 5 mA			2	10	mV
ΔV_O	Load Regulation	V_I = 2.8 V, I_O = 5 to 500 mA			2	10	mV
I_d	Quiescent Current	V_I = 2.5 to 16V, I_O = 0mA	ON MODE		0.5	1	mA
		V_I = 2.8 to 16V, I_O = 500mA				12	
		V_I = 6 V	OFF MODE		50	100	µA
SVR	Supply Voltage Rejection	I_O = 5 mA V_I = 3.5 ± 1 V	f = 120 Hz		82		dB
			f = 1 KHz		77		
			f = 10 KHz		65		
eN	Output Noise Voltage	B = 10 Hz to 100 KHz			50		µV
V_d	Dropout Voltage	I_O = 200 mA			1		V
V_{IL}	Control Input Logic Low	T_a = -40 to 125°C				0.8	V
V_{IH}	Control Input Logic High	T_a = -40 to 125°C		2			V
I_I	Control Input Current	V_I = 6 V, V_C = 6 V			10		µA
C_O	Output Bypass Capacitance	ESR = 0.1 to 10 Ω I_O = 0 to 500 mA		2	10		µF

ELECTRICAL CHARACTERISTICS FOR LF18AB (refer to the test circuits, T_j = 25°C, C_I = 0.1 µF, C_O = 2.2 µF unless otherwise specified.)

Symbol	Parameter	Test Conditions		Min.	Typ.	Max.	Unit
V_O	Output Voltage	I_O = 50 mA, V_I = 3.3 V		1.782	1.8	1.818	V
		I_O = 50 mA, V_I = 3.3 V, T_a = -25 to 85°C		1.764		1.836	
V_I	Operating Input Voltage	I_O = 500 mA		3		16	V
I_O	Output Current Limit				1		A
ΔV_O	Line Regulation	V_I = 2.8 to 16 V, I_O = 5 mA			2	12	mV
ΔV_O	Load Regulation	V_I = 3.3 V, I_O = 5 to 500 mA			2	10	mV
I_d	Quiescent Current	V_I = 2.5 to 16V, I_O = 0mA	ON MODE		0.5	1	mA
		V_I = 3.1 to 16V, I_O = 500mA				12	
		V_I = 6 V	OFF MODE		50	100	µA
SVR	Supply Voltage Rejection	I_O = 5 mA V_I = 3.5 ± 1 V	f = 120 Hz		82		dB
			f = 1 KHz		77		
			f = 10 KHz		60		
eN	Output Noise Voltage	B = 10 Hz to 100 KHz			50		µV
V_d	Dropout Voltage	I_O = 200 mA			0.7		V
V_{IL}	Control Input Logic Low	T_a = -40 to 125°C				0.8	V
V_{IH}	Control Input Logic High	T_a = -40 to 125°C		2			V
I_I	Control Input Current	V_I = 6 V, V_C = 6 V			10		µA
C_O	Output Bypass Capacitance	ESR = 0.1 to 10 Ω I_O = 0 to 500 mA		2	10		µF

ELECTRICAL CHARACTERISTICS FOR LF18C (refer to the test circuits, T_j = 25°C, C_I = 0.1 µF, C_O = 2.2 µF unless otherwise specified.)

Symbol	Parameter	Test Conditions		Min.	Typ.	Max.	Unit
V_O	Output Voltage	I_O = 50 mA, V_I = 3.5 V		1.764	1.8	1.836	V
		I_O = 50 mA, V_I = 3.5 V, T_a = -25 to 85°C		1.728		1.872	
V_I	Operating Input Voltage	I_O = 500 mA		3		16	V
I_O	Output Current Limit				1		A
ΔV_O	Line Regulation	V_I = 2.8 to 16 V, I_O = 5 mA			2	12	mV
ΔV_O	Load Regulation	V_I = 3.3 V, I_O = 5 to 500 mA			2	10	mV
I_d	Quiescent Current	V_I = 2.5 to 16V, I_O = 0mA	ON MODE		0.5	1	mA
		V_I = 3.1 to 16V, I_O = 500mA				12	
		V_I = 6 V	OFF MODE		50	100	µA
SVR	Supply Voltage Rejection	I_O = 5 mA V_I = 3.5 ± 1 V	f = 120 Hz		82		dB
			f = 1 KHz		77		
			f = 10 KHz		60		
eN	Output Noise Voltage	B = 10 Hz to 100 KHz			50		µV
V_d	Dropout Voltage	I_O = 200 mA			0.7		V
V_{IL}	Control Input Logic Low	T_a = -40 to 125°C				0.8	V
V_{IH}	Control Input Logic High	T_a = -40 to 125°C		2			V
I_I	Control Input Current	V_I = 6 V, V_C = 6 V			10		µA
C_O	Output Bypass Capacitance	ESR = 0.1 to 10 Ω I_O = 0 to 500 mA		2	10		µF

ELECTRICAL CHARACTERISTICS FOR LF25AB (refer to the test circuits, T_j = 25°C, C_I = 0.1 µF, C_O = 2.2 µF unless otherwise specified.)

Symbol	Parameter	Test Conditions		Min.	Typ.	Max.	Unit
V_O	Output Voltage	I_O = 50 mA, V_I = 4.5 V		2.475	2.5	2.525	V
		I_O = 50 mA, V_I = 4.5 V, T_a = -25 to 85°C		2.450		2.550	
V_I	Operating Input Voltage	I_O = 500 mA				16	V
I_O	Output Current Limit				1		A
ΔV_O	Line Regulation	V_I = 3.5 to 16 V, I_O = 5 mA			2	12	mV
ΔV_O	Load Regulation	V_I = 3.8 V, I_O = 5 to 500 mA			2	12	mV
I_d	Quiescent Current	V_I = 3.5 to 16V, I_O = 0mA	ON MODE		0.5	1	mA
		V_I = 3.8 to 16V, I_O = 500mA				12	
		V_I = 6 V	OFF MODE		50	100	µA
SVR	Supply Voltage Rejection	I_O = 5 mA V_I = 4.5 ± 1 V	f = 120 Hz		82		dB
			f = 1 KHz		77		
			f = 10 KHz		65		
eN	Output Noise Voltage	B = 10 Hz to 100 KHz			50		µV
V_d	Dropout Voltage	I_O = 200 mA			0.2	0.35	V
		I_O = 500 mA			0.4	0.7	
V_{IL}	Control Input Logic Low	T_a = -40 to 125°C				0.8	V
V_{IH}	Control Input Logic High	T_a = -40 to 125°C		2			V
I_I	Control Input Current	V_I = 6 V, V_C = 6 V			10		µA
C_O	Output Bypass Capacitance	ESR = 0.1 to 10 Ω I_O = 0 to 500 mA		2	10		µF

ELECTRICAL CHARACTERISTICS FOR LF25C (refer to the test circuits, T_j = 25°C, C_I = 0.1 µF, C_O = 2.2 µF unless otherwise specified.)

Symbol	Parameter	Test Conditions		Min.	Typ.	Max.	Unit
V_O	Output Voltage	I_O = 50 mA, V_I = 4.5 V		2.45	2.5	2.55	V
		I_O = 50 mA, V_I = 4.5 V, T_a = -25 to 85°C		2.4		2.6	
V_I	Operating Input Voltage	I_O = 500 mA				16	V
I_O	Output Current Limit				1		A
ΔV_O	Line Regulation	V_I = 3.5 to 16 V, I_O = 5 mA			2	12	mV
ΔV_O	Load Regulation	V_I = 3.8 V, I_O = 5 to 500 mA			2	12	mV
I_d	Quiescent Current	V_I = 3.5 to 16V, I_O = 0mA	ON MODE		0.5	1	mA
		V_I = 3.8 to 16V, I_O = 500mA				12	
		V_I = 6 V	OFF MODE		50	100	µA
SVR	Supply Voltage Rejection	I_O = 5 mA V_I = 4.5 ± 1 V	f = 120 Hz		82		dB
			f = 1 KHz		77		
			f = 10 KHz		65		
eN	Output Noise Voltage	B = 10 Hz to 100 KHz			50		µV
V_d	Dropout Voltage	I_O = 200 mA			0.2	0.35	V
		I_O = 500 mA			0.4	0.7	
V_{IL}	Control Input Logic Low	T_a = -40 to 125°C				0.8	V
V_{IH}	Control Input Logic High	T_a = -40 to 125°C		2			V
I_I	Control Input Current	V_I = 6 V, V_C = 6 V			10		µA
C_O	Output Bypass Capacitance	ESR = 0.1 to 10 Ω I_O = 0 to 500 mA		2	10		µF

ELECTRICAL CHARACTERISTICS FOR LF27AB (refer to the test circuits, T_j = 25°C, C_I = 0.1 µF, C_O = 2.2 µF unless otherwise specified.)

Symbol	Parameter	Test Conditions		Min.	Typ.	Max.	Unit
V_O	Output Voltage	I_O = 50 mA, V_I = 4.7 V		2.673	2.7	2.727	V
		I_O = 50 mA, V_I = 4.7 V, T_a = -25 to 85°C		2.646		2.754	
V_I	Operating Input Voltage	I_O = 500 mA				16	V
I_O	Output Current Limit				1		A
ΔV_O	Line Regulation	V_I = 3.7 to 16 V, I_O = 5 mA			2	13	mV
ΔV_O	Load Regulation	V_I = 4 V, I_O = 5 to 500 mA			2	13	mV
I_d	Quiescent Current	V_I = 3.7 to 16V I_O = 0mA	ON MODE		0.5	1	mA
		V_I = 4 to 16V I_O = 500mA				12	
		V_I = 6 V	OFF MODE		50	100	µA
SVR	Supply Voltage Rejection	I_O = 5 mA V_I = 4.7 ± 1 V	f = 120 Hz		82		dB
			f = 1 KHz		77		
			f = 10 KHz		65		
eN	Output Noise Voltage	B = 10 Hz to 100 KHz			50		µV
V_d	Dropout Voltage	I_O = 200 mA			0.2	0.35	V
		I_O = 500 mA			0.4	0.7	
V_{IL}	Control Input Logic Low	T_a = -40 to 125°C				0.8	V
V_{IH}	Control Input Logic High	T_a = -40 to 125°C		2			V
I_I	Control Input Current	V_I = 6 V, V_C = 6 V			10		µA
C_O	Output Bypass Capacitance	ESR = 0.1 to 10 Ω I_O = 0 to 500 mA		2	10		µF

ELECTRICAL CHARACTERISTICS FOR LF27C (refer to the test circuits, T_j = 25°C, C_I = 0.1 µF, C_O = 2.2 µF unless otherwise specified.)

Symbol	Parameter	Test Conditions		Min.	Typ.	Max.	Unit
V_O	Output Voltage	I_O = 50 mA, V_I = 4.7 V		2.646	2.7	2.754	V
		I_O = 50 mA, V_I = 4.7 V, T_a = -25 to 85°C		2.592		2.808	
V_I	Operating Input Voltage	I_O = 500 mA				16	V
I_O	Output Current Limit				1		A
ΔV_O	Line Regulation	V_I = 3.7 to 16 V I_O = 5 mA			2	13	mV
ΔV_O	Load Regulation	V_I = 4 V, I_O = 5 to 500 mA			2	13	mV
I_d	Quiescent Current	V_I = 3.7 to 16V I_O = 0mA	ON MODE		0.5	1	mA
		V_I = 4 to 16V I_O = 500mA				12	
		V_I = 6 V	OFF MODE		50	100	µA
SVR	Supply Voltage Rejection	I_O = 5 mA V_I = 4.7 ± 1 V	f = 120 Hz		82		dB
			f = 1 KHz		77		
			f = 10 KHz		65		
eN	Output Noise Voltage	B = 10 Hz to 100 KHz			50		µV
V_d	Dropout Voltage	I_O = 200 mA			0.2	0.35	V
		I_O = 500 mA			0.4	0.7	
V_{IL}	Control Input Logic Low	T_a = -40 to 125°C				0.8	V
V_{IH}	Control Input Logic High	T_a = -40 to 125°C		2			V
I_I	Control Input Current	V_I = 6 V, V_C = 6 V			10		µA
C_O	Output Bypass Capacitance	ESR = 0.1 to 10 Ω I_O = 0 to 500 mA		2	10		µF

ELECTRICAL CHARACTERISTICS FOR LF30AB (refer to the test circuits, T_j = 25°C, C_I = 0.1 µF, C_O = 2.2 µF unless otherwise specified.)

Symbol	Parameter	Test Conditions		Min.	Typ.	Max.	Unit
V_O	Output Voltage	I_O = 50 mA, V_I = 5 V		2.970	3	3.03	V
		I_O = 50 mA, V_I = 5 V, T_a = -25 to 85°C		2.94		3.06	
V_I	Operating Input Voltage	I_O = 500 mA				16	V
I_O	Output Current Limit				1		A
ΔV_O	Line Regulation	V_I = 4 to 16 V, I_O = 5 mA			3	15	mV
ΔV_O	Load Regulation	V_I = 4.3 V, I_O = 5 to 500 mA			3	15	mV
I_d	Quiescent Current	V_I = 4 to 16V, I_O = 0mA	ON MODE		0.5	1	mA
		V_I = 4.3 to 16V I_O = 500mA				12	
		V_I = 6 V	OFF MODE		50	100	µA
SVR	Supply Voltage Rejection	I_O = 5 mA V_I = 5 ± 1 V	f = 120 Hz		81		dB
			f = 1 KHz		76		
			f = 10 KHz		65		
eN	Output Noise Voltage	B = 10 Hz to 100 KHz			50		µV
V_d	Dropout Voltage	I_O = 200 mA			0.2	0.35	V
		I_O = 500 mA			0.4	0.7	
V_{IL}	Control Input Logic Low	T_a = -40 to 125°C				0.8	V
V_{IH}	Control Input Logic High	T_a = -40 to 125°C		2			V
I_I	Control Input Current	V_I = 6 V, V_C = 6 V			10		µA
C_O	Output Bypass Capacitance	ESR = 0.1 to 10 Ω I_O = 0 to 500 mA		2	10		µF

ELECTRICAL CHARACTERISTICS FOR LF30C (refer to the test circuits, T_j = 25°C, C_I = 0.1 µF, C_O = 2.2 µF unless otherwise specified.)

Symbol	Parameter	Test Conditions		Min.	Typ.	Max.	Unit
V_O	Output Voltage	I_O = 50 mA, V_I = 5 V		2.94	3	3.06	V
		I_O = 50 mA, V_I = 5 V, T_a = -25 to 85°C		2.88		3.12	
V_I	Operating Input Voltage	I_O = 500 mA				16	V
I_O	Output Current Limit				1		A
ΔV_O	Line Regulation	V_I = 4 to 16 V, I_O = 5 mA			3	15	mV
ΔV_O	Load Regulation	V_I = 4.3 V, I_O = 5 to 500 mA			3	15	mV
I_d	Quiescent Current	V_I = 4 to 16V, I_O = 0mA	ON MODE		0.5	1	mA
		V_I = 4.3 to 16V I_O = 500mA				12	
		V_I = 6 V	OFF MODE		50	100	µA
SVR	Supply Voltage Rejection	I_O = 5 mA V_I = 5 ± 1 V	f = 120 Hz		81		dB
			f = 1 KHz		76		
			f = 10 KHz		65		
eN	Output Noise Voltage	B = 10 Hz to 100 KHz			50		µV
V_d	Dropout Voltage	I_O = 200 mA			0.2	0.35	V
		I_O = 500 mA			0.4	0.7	
V_{IL}	Control Input Logic Low	T_a = -40 to 125°C				0.8	V
V_{IH}	Control Input Logic High	T_a = -40 to 125°C		2			V
I_I	Control Input Current	V_I = 6 V, V_C = 6 V			10		µA
C_O	Output Bypass Capacitance	ESR = 0.1 to 10 Ω I_O = 0 to 500 mA		2	10		µF

ELECTRICAL CHARACTERISTICS FOR LF33AB (refer to the test circuits, T_j = 25°C, C_I = 0.1 µF, C_O = 2.2 µF unless otherwise specified.)

Symbol	Parameter	Test Conditions		Min.	Typ.	Max.	Unit
V_O	Output Voltage	I_O = 50 mA, V_I = 5.3 V		3.267	3.3	3.333	V
		I_O = 50 mA, V_I = 5.3 V, T_a = -25 to 85°C		3.234		3.366	
V_I	Operating Input Voltage	I_O = 500 mA				16	V
I_O	Output Current Limit				1		A
ΔV_O	Line Regulation	V_I = 4.3 to 16 V, I_O = 5 mA			3	16	mV
ΔV_O	Load Regulation	V_I = 4.6 V, I_O = 5 to 500 mA			3	16	mV
I_d	Quiescent Current	V_I = 4.3 to 16V, I_O = 0mA	ON MODE		0.5	1	mA
		V_I = 4.6 to 16V, I_O = 500mA				12	
		V_I = 6 V	OFF MODE		50	100	µA
SVR	Supply Voltage Rejection	I_O = 5 mA V_I = 5.3 ± 1 V	f = 120 Hz		80		dB
			f = 1 KHz		75		
			f = 10 KHz		65		
eN	Output Noise Voltage	B = 10 Hz to 100 KHz			50		µV
V_d	Dropout Voltage	I_O = 200 mA			0.2	0.35	V
		I_O = 500 mA			0.4	0.7	
V_{IL}	Control Input Logic Low	T_a = -40 to 125°C				0.8	V
V_{IH}	Control Input Logic High	T_a = -40 to 125°C		2			V
I_I	Control Input Current	V_I = 6 V, V_C = 6 V			10		µA
C_O	Output Bypass Capacitance	ESR = 0.1 to 10 Ω I_O = 0 to 500 mA		2	10		µF

ELECTRICAL CHARACTERISTICS FOR LF33C (refer to the test circuits, T_j = 25°C, C_I = 0.1 µF, C_O = 2.2 µF unless otherwise specified.)

Symbol	Parameter	Test Conditions		Min.	Typ.	Max.	Unit
V_O	Output Voltage	I_O = 50 mA, V_I = 5.3 V		3.234	3.3	3.366	V
		I_O = 50 mA, V_I = 5.3 V, T_a = -25 to 85°C		3.168		3.432	
V_I	Operating Input Voltage	I_O = 500 mA				16	V
I_O	Output Current Limit				1		A
ΔV_O	Line Regulation	V_I = 4.3 to 16 V, I_O = 5 mA			3	16	mV
ΔV_O	Load Regulation	V_I = 4.6 V, I_O = 5 to 500 mA			3	16	mV
I_d	Quiescent Current	V_I = 4.3 to 16V, I_O = 0mA	ON MODE		0.5	1	mA
		V_I = 4.6 to 16V, I_O = 500mA				12	
		V_I = 6 V	OFF MODE		50	100	µA
SVR	Supply Voltage Rejection	I_O = 5 mA V_I = 5.3 ± 1 V	f = 120 Hz		80		dB
			f = 1 KHz		75		
			f = 10 KHz		65		
eN	Output Noise Voltage	B = 10 Hz to 100 KHz			50		µV
V_d	Dropout Voltage	I_O = 200 mA			0.2	0.35	V
		I_O = 500 mA			0.4	0.7	
V_{IL}	Control Input Logic Low	T_a = -40 to 125°C				0.8	V
V_{IH}	Control Input Logic High	T_a = -40 to 125°C		2			V
I_I	Control Input Current	V_I = 6 V, V_C = 6 V			10		µA
C_O	Output Bypass Capacitance	ESR = 0.1 to 10 Ω I_O = 0 to 500 mA		2	10		µF

ELECTRICAL CHARACTERISTICS FOR LF35AB (refer to the test circuits, T_j = 25°C, C_I = 0.1 µF, C_O = 2.2 µF unless otherwise specified.)

Symbol	Parameter	Test Conditions		Min.	Typ.	Max.	Unit
V_O	Output Voltage	I_O = 50 mA, V_I = 5.5 V		3.465	3.5	3.535	V
		I_O = 50 mA, V_I = 5.5 V, T_a = -25 to 85°C		3.430		3.570	
V_I	Operating Input Voltage	I_O = 500 mA				16	V
I_O	Output Current Limit				1		A
ΔV_O	Line Regulation	V_I = 4.5 to 16 V, I_O = 5 mA			3	17	mV
ΔV_O	Load Regulation	V_I = 4.8 V, I_O = 5 to 500 mA			3	17	mV
I_d	Quiescent Current	V_I = 4.5 to 16V, I_O = 0mA	ON MODE		0.5	1	mA
		V_I = 4.8 to 16V, I_O = 500mA				12	
		V_I = 6 V	OFF MODE		50	100	µA
SVR	Supply Voltage Rejection	I_O = 5 mA V_I = 5.5 ± 1 V	f = 120 Hz		79		dB
			f = 1 KHz		74		
			f = 10 KHz		60		
eN	Output Noise Voltage	B = 10 Hz to 100 KHz			50		µV
V_d	Dropout Voltage	I_O = 200 mA			0.2	0.35	V
		I_O = 500 mA			0.4	0.7	
V_{IL}	Control Input Logic Low	T_a = -40 to 125°C				0.8	V
V_{IH}	Control Input Logic High	T_a = -40 to 125°C		2			V
I_I	Control Input Current	V_I = 6 V, V_C = 6 V			10		µA
C_O	Output Bypass Capacitance	ESR = 0.1 to 10 Ω I_O = 0 to 500 mA		2	10		µF

ELECTRICAL CHARACTERISTICS FOR LF35C (refer to the test circuits, T_j = 25°C, C_I = 0.1 µF, C_O = 2.2 µF unless otherwise specified.)

Symbol	Parameter	Test Conditions		Min.	Typ.	Max.	Unit
V_O	Output Voltage	I_O = 50 mA, V_I = 5.5 V		3.43	3.5	3.57	V
		I_O = 50 mA, V_I = 5.5 V, T_a = -25 to 85°C		3.36		3.64	
V_I	Operating Input Voltage	I_O = 500 mA				16	V
I_O	Output Current Limit				1		A
ΔV_O	Line Regulation	V_I = 4.5 to 16 V, I_O = 5 mA			3	17	mV
ΔV_O	Load Regulation	V_I = 4.8 V, I_O = 5 to 500 mA			3	17	mV
I_d	Quiescent Current	V_I = 4.5 to 16V, I_O = 0mA	ON MODE		0.5	1	mA
		V_I = 4.8 to 16V, I_O = 500mA				12	
		V_I = 6 V	OFF MODE		50	100	µA
SVR	Supply Voltage Rejection	I_O = 5 mA V_I = 5.5 ± 1 V	f = 120 Hz		79		dB
			f = 1 KHz		74		
			f = 10 KHz		60		
eN	Output Noise Voltage	B = 10 Hz to 100 KHz			50		µV
V_d	Dropout Voltage	I_O = 200 mA			0.2	0.35	V
		I_O = 500 mA			0.4	0.7	
V_{IL}	Control Input Logic Low	T_a = -40 to 125°C				0.8	V
V_{IH}	Control Input Logic High	T_a = -40 to 125°C		2			V
I_I	Control Input Current	V_I = 6 V, V_C = 6 V			10		µA
C_O	Output Bypass Capacitance	ESR = 0.1 to 10 Ω I_O = 0 to 500 mA		2	10		µF

ELECTRICAL CHARACTERISTICS FOR LF40AB (refer to the test circuits, T_j = 25°C, C_I = 0.1 µF, C_O = 2.2 µF unless otherwise specified.)

Symbol	Parameter	Test Conditions		Min.	Typ.	Max.	Unit
V_O	Output Voltage	I_O = 50 mA, V_I = 6 V		3.96	4	4.04	V
		I_O = 50 mA, V_I = 6 V, T_a = -25 to 85°C		3.92		4.08	
V_I	Operating Input Voltage	I_O = 500 mA				16	V
I_O	Output Current Limit				1		A
ΔV_O	Line Regulation	V_I = 5 to 16 V, I_O = 5 mA			4	20	mV
ΔV_O	Load Regulation	V_I = 5.3 V, I_O = 5 to 500 mA			4	20	mV
I_d	Quiescent Current	V_I = 5 to 16V, I_O = 0mA	ON MODE		0.5	1	mA
		V_I = 5.3 to 16V, I_O = 500mA				12	
		V_I = 6 V	OFF MODE		50	100	µA
SVR	Supply Voltage Rejection	I_O = 5 mA V_I = 6 ± 1 V	f = 120 Hz		78		dB
			f = 1 KHz		73		
			f = 10 KHz		60		
eN	Output Noise Voltage	B = 10 Hz to 100 KHz			50		µV
V_d	Dropout Voltage	I_O = 200 mA			0.2	0.35	V
		I_O = 500 mA			0.4	0.7	
V_{IL}	Control Input Logic Low	T_a = -40 to 125°C				0.8	V
V_{IH}	Control Input Logic High	T_a = -40 to 125°C		2			V
I_I	Control Input Current	V_I = 6 V, V_C = 6 V			10		µA
C_O	Output Bypass Capacitance	ESR = 0.1 to 10 Ω I_O = 0 to 500 mA		2	10		µF

ELECTRICAL CHARACTERISTICS FOR LF40C (refer to the test circuits, T_j = 25°C, C_I = 0.1 µF, C_O = 2.2 µF unless otherwise specified.)

Symbol	Parameter	Test Conditions		Min.	Typ.	Max.	Unit
V_O	Output Voltage	I_O = 50 mA, V_I = 6 V		3.92	4	4.08	V
		I_O = 50 mA, V_I = 6 V, T_a = -25 to 85°C		3.84		4.16	
V_I	Operating Input Voltage	I_O = 500 mA				16	V
I_O	Output Current Limit				1		A
ΔV_O	Line Regulation	V_I = 5 to 16 V, I_O = 5 mA			4	20	mV
ΔV_O	Load Regulation	V_I = 5.3 V, I_O = 5 to 500 mA			4	20	mV
I_d	Quiescent Current	V_I = 5 to 16V, I_O = 0mA	ON MODE		0.5	1	mA
		V_I = 5.3 to 16V, I_O = 500mA				12	
		V_I = 6 V	OFF MODE		50	100	µA
SVR	Supply Voltage Rejection	I_O = 5 mA V_I = 6 ± 1 V	f = 120 Hz		78		dB
			f = 1 KHz		73		
			f = 10 KHz		60		
eN	Output Noise Voltage	B = 10 Hz to 100 KHz			50		µV
V_d	Dropout Voltage	I_O = 200 mA			0.2	0.35	V
		I_O = 500 mA			0.4	0.7	
V_{IL}	Control Input Logic Low	T_a = -40 to 125°C				0.8	V
V_{IH}	Control Input Logic High	T_a = -40 to 125°C		2			V
I_I	Control Input Current	V_I = 6 V, V_C = 6 V			10		µA
C_O	Output Bypass Capacitance	ESR = 0.1 to 10 Ω I_O = 0 to 500 mA		2	10		µF

ELECTRICAL CHARACTERISTICS FOR LF45AB (refer to the test circuits, T_j = 25°C, C_I = 0.1 µF, C_O = 2.2 µF unless otherwise specified.)

Symbol	Parameter	Test Conditions		Min.	Typ.	Max.	Unit
V_O	Output Voltage	I_O = 50 mA, V_I = 6.5 V		4.455	4.5	4.545	V
		I_O = 50 mA, V_I = 6.5 V, T_a = -25 to 85°C		4.41		4.59	
V_I	Operating Input Voltage	I_O = 500 mA				16	V
I_O	Output Current Limit				1		A
ΔV_O	Line Regulation	V_I = 5.5 to 16 V, I_O = 5 mA			4	22	mV
ΔV_O	Load Regulation	V_I = 5.8 V, I_O = 5 to 500 mA			4	22	mV
I_d	Quiescent Current	V_I = 5.5 to 16V, I_O = 0mA	ON MODE		0.5	1	mA
		V_I = 5.8 to 16V, I_O = 500mA				12	
		V_I = 6 V	OFF MODE		50	100	µA
SVR	Supply Voltage Rejection	I_O = 5 mA V_I = 6.5 ± 1 V	f = 120 Hz		77		dB
			f = 1 KHz		72		
			f = 10 KHz		60		
eN	Output Noise Voltage	B = 10 Hz to 100 KHz			50		µV
V_d	Dropout Voltage	I_O = 200 mA			0.2	0.35	V
		I_O = 500 mA			0.4	0.7	
V_{IL}	Control Input Logic Low	T_a = -40 to 125°C				0.8	V
V_{IH}	Control Input Logic High	T_a = -40 to 125°C		2			V
I_I	Control Input Current	V_I = 6 V, V_C = 6 V			10		µA
C_O	Output Bypass Capacitance	ESR = 0.1 to 10 Ω I_O = 0 to 500 mA		2	10		µF

ELECTRICAL CHARACTERISTICS FOR LF45C (refer to the test circuits, T_j = 25°C, C_I = 0.1 µF, C_O = 2.2 µF unless otherwise specified.)

Symbol	Parameter	Test Conditions		Min.	Typ.	Max.	Unit
V_O	Output Voltage	I_O = 50 mA, V_I = 6.5 V		4.41	4.5	4.59	V
		I_O = 50 mA, V_I = 6.5 V, T_a = -25 to 85°C		4.32		4.68	
V_I	Operating Input Voltage	I_O = 500 mA				16	V
I_O	Output Current Limit				1		A
ΔV_O	Line Regulation	V_I = 5.5 to 16 V, I_O = 5 mA			4	22	mV
ΔV_O	Load Regulation	V_I = 5.8 V, I_O = 5 to 500 mA			4	22	mV
I_d	Quiescent Current	V_I = 5.5 to 16V, I_O = 0mA	ON MODE		0.5	1	mA
		V_I = 5.8 to 16V, I_O = 500mA				12	
		V_I = 6 V	OFF MODE		50	100	µA
SVR	Supply Voltage Rejection	I_O = 5 mA V_I = 6.5 ± 1 V	f = 120 Hz		77		dB
			f = 1 KHz		72		
			f = 10 KHz		60		
eN	Output Noise Voltage	B = 10 Hz to 100 KHz			50		µV
V_d	Dropout Voltage	I_O = 200 mA			0.2	0.35	V
		I_O = 500 mA			0.4	0.7	
V_{IL}	Control Input Logic Low	T_a = -40 to 125°C				0.8	V
V_{IH}	Control Input Logic High	T_a = -40 to 125°C		2			V
I_I	Control Input Current	V_I = 6 V, V_C = 6 V			10		µA
C_O	Output Bypass Capacitance	ESR = 0.1 to 10 Ω I_O = 0 to 500 mA		2	10		µF

ELECTRICAL CHARACTERISTICS FOR LF47AB (refer to the test circuits, T_j = 25°C, C_I = 0.1 µF, C_O = 2.2 µF unless otherwise specified.)

Symbol	Parameter	Test Conditions		Min.	Typ.	Max.	Unit
V_O	Output Voltage	I_O = 50 mA, V_I = 6.7 V		4.653	4.7	4.747	V
		I_O = 50 mA, V_I = 6.7 V, T_a = -25 to 85°C		4.606		4.794	
V_I	Operating Input Voltage	I_O = 500 mA				16	V
I_O	Output Current Limit				1		A
ΔV_O	Line Regulation	V_I = 5.7 to 16 V, I_O = 5 mA			4	23	mV
ΔV_O	Load Regulation	V_I = 6 V, I_O = 5 to 500 mA			4	23	mV
I_d	Quiescent Current	V_I = 5.7 to 16V, I_O = 0mA	ON MODE		0.5	1	mA
		V_I = 6 to 16V, I_O = 500mA				12	
		V_I = 6 V	OFF MODE		50	100	µA
SVR	Supply Voltage Rejection	I_O = 5 mA V_I = 6.7 ± 1 V	f = 120 Hz		77		dB
			f = 1 KHz		72		
			f = 10 KHz		60		
eN	Output Noise Voltage	B = 10 Hz to 100 KHz			50		µV
V_d	Dropout Voltage	I_O = 200 mA			0.2	0.35	V
		I_O = 500 mA			0.4	0.7	
V_{IL}	Control Input Logic Low	T_a = -40 to 125°C				0.8	V
V_{IH}	Control Input Logic High	T_a = -40 to 125°C		2			V
I_I	Control Input Current	V_I = 6 V, V_C = 6 V			10		µA
C_O	Output Bypass Capacitance	ESR = 0.1 to 10 Ω I_O = 0 to 500 mA		2	10		µF

ELECTRICAL CHARACTERISTICS FOR LF47C (refer to the test circuits, T_j = 25°C, C_I = 0.1 µF, C_O = 2.2 µF unless otherwise specified.)

Symbol	Parameter	Test Conditions		Min.	Typ.	Max.	Unit
V_O	Output Voltage	I_O = 50 mA, V_I = 6.7 V		4.606	4.7	4.794	V
		I_O = 50 mA, V_I = 6.7 V, T_a = -25 to 85°C		4.512		4.888	
V_I	Operating Input Voltage	I_O = 500 mA				16	V
I_O	Output Current Limit				1		A
ΔV_O	Line Regulation	V_I = 5.7 to 16 V, I_O = 5 mA			4	23	mV
ΔV_O	Load Regulation	V_I = 6 V, I_O = 5 to 500 mA			4	23	mV
I_d	Quiescent Current	V_I = 5.7 to 16V, I_O = 0mA	ON MODE		0.5	1	mA
		V_I = 6 to 16V, I_O = 500mA				12	
		V_I = 6 V	OFF MODE		50	100	µA
SVR	Supply Voltage Rejection	I_O = 5 mA V_I = 6.7 ± 1 V	f = 120 Hz		77		dB
			f = 1 KHz		72		
			f = 10 KHz		60		
eN	Output Noise Voltage	B = 10 Hz to 100 KHz			50		µV
V_d	Dropout Voltage	I_O = 200 mA			0.2	0.35	V
		I_O = 500 mA			0.4	0.7	
V_{IL}	Control Input Logic Low	T_a = -40 to 125°C				0.8	V
V_{IH}	Control Input Logic High	T_a = -40 to 125°C		2			V
I_I	Control Input Current	V_I = 6 V, V_C = 6 V			10		µA
C_O	Output Bypass Capacitance	ESR = 0.1 to 10 Ω I_O = 0 to 500 mA		2	10		µF

ELECTRICAL CHARACTERISTICS FOR LF50AB (refer to the test circuits, T_j = 25°C, C_I = 0.1 µF, C_O = 2.2 µF unless otherwise specified.)

Symbol	Parameter	Test Conditions		Min.	Typ.	Max.	Unit
V_O	Output Voltage	I_O = 50 mA, V_I = 7 V		4.95	5	5.05	V
		I_O = 50 mA, V_I = 7 V, T_a = -25 to 85°C		4.9		5.1	
V_I	Operating Input Voltage	I_O = 500 mA				16	V
I_O	Output Current Limit				1		A
ΔV_O	Line Regulation	V_I = 6 to 16 V, I_O = 5 mA			5	25	mV
ΔV_O	Load Regulation	V_I = 6.3 V, I_O = 5 to 500 mA			5	25	mV
I_d	Quiescent Current	V_I = 6 to 16V, I_O = 0mA	ON MODE		0.5	1	mA
		V_I = 6.3 to 16V, I_O = 500mA				12	
		V_I = 6 V	OFF MODE		50	100	µA
SVR	Supply Voltage Rejection	I_O = 5 mA V_I = 7 ± 1 V	f = 120 Hz		76		dB
			f = 1 KHz		71		
			f = 10 KHz		60		
eN	Output Noise Voltage	B = 10 Hz to 100 KHz			50		µV
V_d	Dropout Voltage	I_O = 200 mA			0.2	0.35	V
		I_O = 500 mA			0.4	0.7	
V_{IL}	Control Input Logic Low	T_a = -40 to 125°C				0.8	V
V_{IH}	Control Input Logic High	T_a = -40 to 125°C		2			V
I_I	Control Input Current	V_I = 6 V, V_C = 6 V			10		µA
C_O	Output Bypass Capacitance	ESR = 0.1 to 10 Ω I_O = 0 to 500 mA		2	10		µF

ELECTRICAL CHARACTERISTICS FOR LF50C (refer to the test circuits, T_j = 25°C, C_I = 0.1 µF, C_O = 2.2 µF unless otherwise specified.)

Symbol	Parameter	Test Conditions		Min.	Typ.	Max.	Unit
V_O	Output Voltage	I_O = 50 mA, V_I = 7 V		4.9	5	5.1	V
		I_O = 50 mA, V_I = 7 V, T_a = -25 to 85°C		4.8		5.2	
V_I	Operating Input Voltage	I_O = 500 mA				16	V
I_O	Output Current Limit				1		A
ΔV_O	Line Regulation	V_I = 6 to 16 V, I_O = 5 mA			5	25	mV
ΔV_O	Load Regulation	V_I = 6.3 V, I_O = 5 to 500 mA			5	25	mV
I_d	Quiescent Current	V_I = 6 to 16V, I_O = 0mA	ON MODE		0.5	1	mA
		V_I = 6.3 to 16V, I_O = 500mA				12	
		V_I = 6 V	OFF MODE		50	100	µA
SVR	Supply Voltage Rejection	I_O = 5 mA V_I = 7 ± 1 V	f = 120 Hz		76		dB
			f = 1 KHz		71		
			f = 10 KHz		60		
eN	Output Noise Voltage	B = 10 Hz to 100 KHz			50		µV
V_d	Dropout Voltage	I_O = 200 mA			0.2	0.35	V
		I_O = 500 mA			0.4	0.7	
V_{IL}	Control Input Logic Low	T_a = -40 to 125°C				0.8	V
V_{IH}	Control Input Logic High	T_a = -40 to 125°C		2			V
I_I	Control Input Current	V_I = 6 V, V_C = 6 V			10		µA
C_O	Output Bypass Capacitance	ESR = 0.1 to 10 Ω I_O = 0 to 500 mA		2	10		µF

ELECTRICAL CHARACTERISTICS FOR LF52AB (refer to the test circuits, T_j = 25°C, C_I = 0.1 µF, C_O = 2.2 µF unless otherwise specified.)

Symbol	Parameter	Test Conditions		Min.	Typ.	Max.	Unit
V_O	Output Voltage	I_O = 50 mA, V_I = 7.2 V		5.148	5.2	5.252	V
		I_O = 50 mA, V_I = 7.2 V, T_a = -25 to 85°C		5.096		5.304	
V_I	Operating Input Voltage	I_O = 500 mA				16	V
I_O	Output Current Limit				1		A
ΔV_O	Line Regulation	V_I = 6.2 to 16 V, I_O = 5 mA			5	26	mV
ΔV_O	Load Regulation	V_I = 6.5 V, I_O = 5 to 500 mA			5	26	mV
I_d	Quiescent Current	V_I = 6.2 to 16V, I_O = 0mA	ON MODE		0.5	1	mA
		V_I = 6.5 to 16V, I_O = 500mA				12	
		V_I = 6 V	OFF MODE		50	100	µA
SVR	Supply Voltage Rejection	I_O = 5 mA V_I = 7.2 ± 1 V	f = 120 Hz		76		dB
			f = 1 KHz		71		
			f = 10 KHz		60		
eN	Output Noise Voltage	B = 10 Hz to 100 KHz			50		µV
V_d	Dropout Voltage	I_O = 200 mA			0.2	0.35	V
		I_O = 500 mA			0.4	0.7	
V_{IL}	Control Input Logic Low	T_a = -40 to 125°C				0.8	V
V_{IH}	Control Input Logic High	T_a = -40 to 125°C		2			V
I_I	Control Input Current	V_I = 6 V, V_C = 6 V			10		µA
C_O	Output Bypass Capacitance	ESR = 0.1 to 10 Ω I_O = 0 to 500 mA		2	10		µF

ELECTRICAL CHARACTERISTICS FOR LF52C (refer to the test circuits, T_j = 25°C, C_I = 0.1 µF, C_O = 2.2 µF unless otherwise specified.)

Symbol	Parameter	Test Conditions		Min.	Typ.	Max.	Unit
V_O	Output Voltage	I_O = 50 mA, V_I = 7.2 V		5.096	5.2	5.304	V
		I_O = 50 mA, V_I = 7.2 V, T_a = -25 to 85°C		4.992		5.408	
V_I	Operating Input Voltage	I_O = 500 mA				16	V
I_O	Output Current Limit				1		A
ΔV_O	Line Regulation	V_I = 6.2 to 16 V, I_O = 5 mA			5	26	mV
ΔV_O	Load Regulation	V_I = 6.5 V, I_O = 5 to 500 mA			5	26	mV
I_d	Quiescent Current	V_I = 6.2 to 16V, I_O = 0mA	ON MODE		0.5	1	mA
		V_I = 6.5 to 16V, I_O = 500mA				12	
		V_I = 6 V	OFF MODE		50	100	µA
SVR	Supply Voltage Rejection	I_O = 5 mA V_I = 7.2 ± 1 V	f = 120 Hz		76		dB
			f = 1 KHz		71		
			f = 10 KHz		60		
eN	Output Noise Voltage	B = 10 Hz to 100 KHz			50		µV
V_d	Dropout Voltage	I_O = 200 mA			0.2	0.35	V
		I_O = 500 mA			0.4	0.7	
V_{IL}	Control Input Logic Low	T_a = -40 to 125°C				0.8	V
V_{IH}	Control Input Logic High	T_a = -40 to 125°C		2			V
I_I	Control Input Current	V_I = 6 V, V_C = 6 V			10		µA
C_O	Output Bypass Capacitance	ESR = 0.1 to 10 Ω I_O = 0 to 500 mA		2	10		µF

ELECTRICAL CHARACTERISTICS FOR LF55AB (refer to the test circuits, T_j = 25°C, C_I = 0.1 µF, C_O = 2.2 µF unless otherwise specified.)

Symbol	Parameter	Test Conditions		Min.	Typ.	Max.	Unit
V_O	Output Voltage	I_O = 50 mA, V_I = 7.5 V		5.445	5.5	5.555	V
		I_O = 50 mA, V_I = 7.5 V, T_a = -25 to 85°C		5.39		5.61	
V_I	Operating Input Voltage	I_O = 500 mA				16	V
I_O	Output Current Limit				1		A
ΔV_O	Line Regulation	V_I = 6.5 to 16 V, I_O = 5 mA			5	27	mV
ΔV_O	Load Regulation	V_I = 6.8 V, I_O = 5 to 500 mA			5	27	mV
I_d	Quiescent Current	V_I = 6.5 to 16V, I_O = 0mA	ON MODE		0.5	1	mA
		V_I = 6.8 to 16V, I_O = 500mA				12	
		V_I = 6 V	OFF MODE		50	100	µA
SVR	Supply Voltage Rejection	I_O = 5 mA V_I = 7.5 ± 1 V	f = 120 Hz		76		dB
			f = 1 KHz		71		
			f = 10 KHz		60		
eN	Output Noise Voltage	B = 10 Hz to 100 KHz			50		µV
V_d	Dropout Voltage	I_O = 200 mA			0.2	0.35	V
		I_O = 500 mA			0.4	0.7	
V_{IL}	Control Input Logic Low	T_a = -40 to 125°C				0.8	V
V_{IH}	Control Input Logic High	T_a = -40 to 125°C		2			V
I_I	Control Input Current	V_I = 6 V, V_C = 6 V			10		µA
C_O	Output Bypass Capacitance	ESR = 0.1 to 10 Ω I_O = 0 to 500 mA		2	10		µF

ELECTRICAL CHARACTERISTICS FOR LF55C (refer to the test circuits, T_j = 25°C, C_I = 0.1 µF, C_O = 2.2 µF unless otherwise specified.)

Symbol	Parameter	Test Conditions		Min.	Typ.	Max.	Unit
V_O	Output Voltage	I_O = 50 mA, V_I = 7.5 V		5.39	5.5	5.61	V
		I_O = 50 mA, V_I = 7.5 V, T_a = -25 to 85°C		5.28		5.72	
V_I	Operating Input Voltage	I_O = 500 mA				16	V
I_O	Output Current Limit				1		A
ΔV_O	Line Regulation	V_I = 6.5 to 16 V, I_O = 5 mA			5	27	mV
ΔV_O	Load Regulation	V_I = 6.8 V, I_O = 5 to 500 mA			5	27	mV
I_d	Quiescent Current	V_I = 6.5 to 16V, I_O = 0mA	ON MODE		0.5	1	mA
		V_I = 6.8 to 16V, I_O = 500mA				12	
		V_I = 6 V	OFF MODE		50	100	µA
SVR	Supply Voltage Rejection	I_O = 5 mA V_I = 7.5 ± 1 V	f = 120 Hz		76		dB
			f = 1 KHz		71		
			f = 10 KHz		60		
eN	Output Noise Voltage	B = 10 Hz to 100 KHz			50		µV
V_d	Dropout Voltage	I_O = 200 mA			0.2	0.35	V
		I_O = 500 mA			0.4	0.7	
V_{IL}	Control Input Logic Low	T_a = -40 to 125°C				0.8	V
V_{IH}	Control Input Logic High	T_a = -40 to 125°C		2			V
I_I	Control Input Current	V_I = 6 V, V_C = 6 V			10		µA
C_O	Output Bypass Capacitance	ESR = 0.1 to 10 Ω I_O = 0 to 500 mA		2	10		µF

ELECTRICAL CHARACTERISTICS FOR LF60AB (refer to the test circuits, T_j = 25°C, C_I = 0.1 µF, C_O = 2.2 µF unless otherwise specified.)

Symbol	Parameter	Test Conditions		Min.	Typ.	Max.	Unit
V_O	Output Voltage	I_O = 50 mA, V_I = 8 V		5.94	6	6.06	V
		I_O = 50 mA, V_I = 8 V, T_a = -25 to 85°C		5.88		6.12	
V_I	Operating Input Voltage	I_O = 500 mA				16	V
I_O	Output Current Limit				1		A
ΔV_O	Line Regulation	V_I = 7 to 16 V, I_O = 5 mA			6	30	mV
ΔV_O	Load Regulation	V_I = 7.3 V, I_O = 5 to 500 mA			6	30	mV
I_d	Quiescent Current	V_I = 7 to 16V, I_O = 0mA	ON MODE		0.7	1.5	mA
		V_I = 7.3 to 16V, I_O = 500mA				12	
		V_I = 9 V	OFF MODE		70	140	µA
SVR	Supply Voltage Rejection	I_O = 5 mA V_I = 8 ± 1 V	f = 120 Hz		75		dB
			f = 1 KHz		70		
			f = 10 KHz		60		
eN	Output Noise Voltage	B = 10 Hz to 100 KHz			50		µV
V_d	Dropout Voltage	I_O = 200 mA			0.2	0.35	V
		I_O = 500 mA			0.4	0.7	
V_{IL}	Control Input Logic Low	T_a = -40 to 125°C				0.8	V
V_{IH}	Control Input Logic High	T_a = -40 to 125°C		2			V
I_I	Control Input Current	V_I = 9 V, V_C = 6 V			10		µA
C_O	Output Bypass Capacitance	ESR = 0.1 to 10 Ω I_O = 0 to 500 mA		2	10		µF

ELECTRICAL CHARACTERISTICS FOR LF60C (refer to the test circuits, T_j = 25°C, C_I = 0.1 µF, C_O = 2.2 µF unless otherwise specified.)

Symbol	Parameter	Test Conditions		Min.	Typ.	Max.	Unit
V_O	Output Voltage	I_O = 50 mA, V_I = 8 V		5.88	6	6.12	V
		I_O = 50 mA, V_I = 8 V, T_a = -25 to 85°C		5.76		6.24	
V_I	Operating Input Voltage	I_O = 500 mA				16	V
I_O	Output Current Limit				1		A
ΔV_O	Line Regulation	V_I = 7 to 16 V, I_O = 5 mA			6	30	mV
ΔV_O	Load Regulation	V_I = 7.3 V, I_O = 5 to 500 mA			6	30	mV
I_d	Quiescent Current	V_I = 7 to 16V, I_O = 0mA	ON MODE		0.7	1.5	mA
		V_I = 7.3 to 16V, I_O = 500mA				12	
		V_I = 9 V	OFF MODE		70	140	µA
SVR	Supply Voltage Rejection	I_O = 5 mA, V_I = 8 ± 1 V	f = 120 Hz		75		dB
			f = 1 KHz		70		
			f = 10 KHz		60		
eN	Output Noise Voltage	B = 10 Hz to 100 KHz			50		µV
V_d	Dropout Voltage	I_O = 200 mA			0.2	0.35	V
		I_O = 500 mA			0.4	0.7	
V_{IL}	Control Input Logic Low	T_a = -40 to 125°C				0.8	V
V_{IH}	Control Input Logic High	T_a = -40 to 125°C		2			V
I_I	Control Input Current	V_I = 9 V, V_C = 6 V			10		µA
C_O	Output Bypass Capacitance	ESR = 0.1 to 10 Ω I_O = 0 to 500 mA		2	10		µF

ELECTRICAL CHARACTERISTICS FOR LF80AB (refer to the test circuits, T_j = 25°C, C_I = 0.1 µF, C_O = 2.2 µF unless otherwise specified.)

Symbol	Parameter	Test Conditions		Min.	Typ.	Max.	Unit
V_O	Output Voltage	I_O = 50 mA, V_I = 10 V		7.92	8	8.08	V
		I_O = 50 mA, V_I = 10 V, T_a = -25 to 85°C		7.84		8.16	
V_I	Operating Input Voltage	I_O = 500 mA				16	V
I_O	Output Current Limit				1		A
ΔV_O	Line Regulation	V_I = 9 to 16 V, I_O = 5 mA			8	40	mV
ΔV_O	Load Regulation	V_I = 9.3 V, I_O = 5 to 500 mA			8	40	mV
I_d	Quiescent Current	V_I = 9 to 16V, I_O = 0mA	ON MODE		0.7	1.5	mA
		V_I = 9.3 to 16V, I_O = 500mA				12	
		V_I = 9 V	OFF MODE		70	140	µA
SVR	Supply Voltage Rejection	I_O = 5 mA, V_I = 10 ± 1 V	f = 120 Hz		72		dB
			f = 1 KHz		67		
			f = 10 KHz		57		
eN	Output Noise Voltage	B = 10 Hz to 100 KHz			50		µV
V_d	Dropout Voltage	I_O = 200 mA			0.2	0.35	V
		I_O = 500 mA			0.4	0.7	
V_{IL}	Control Input Logic Low	T_a = -40 to 125°C				0.8	V
V_{IH}	Control Input Logic High	T_a = -40 to 125°C		2			V
I_I	Control Input Current	V_I = 9 V, V_C = 6 V			10		µA
C_O	Output Bypass Capacitance	ESR = 0.1 to 10 Ω I_O = 0 to 500 mA		2	10		µF

ELECTRICAL CHARACTERISTICS FOR LF80C (refer to the test circuits, T_j = 25°C, C_I = 0.1 µF, C_O = 2.2 µF unless otherwise specified.)

Symbol	Parameter	Test Conditions		Min.	Typ.	Max.	Unit
V_O	Output Voltage	I_O = 50 mA, V_I = 10 V		7.84	8	8.16	V
		I_O = 50 mA, V_I = 10 V, T_a = -25 to 85°C		7.68		8.32	
V_I	Operating Input Voltage	I_O = 500 mA				16	V
I_O	Output Current Limit				1		A
ΔV_O	Line Regulation	V_I = 9 to 16 V, I_O = 5 mA			8	40	mV
ΔV_O	Load Regulation	V_I = 9.3 V, I_O = 5 to 500 mA			8	40	mV
I_d	Quiescent Current	V_I = 9 to 16V, I_O = 0mA	ON MODE		0.7	1.5	mA
		V_I = 9.3 to 16V, I_O = 500mA				12	
		V_I = 9 V	OFF MODE		70	140	µA
SVR	Supply Voltage Rejection	I_O = 5 mA V_I = 10 ± 1 V	f = 120 Hz		72		dB
			f = 1 KHz		67		
			f = 10 KHz		57		
eN	Output Noise Voltage	B = 10 Hz to 100 KHz			50		µV
V_d	Dropout Voltage	I_O = 200 mA			0.2	0.35	V
		I_O = 500 mA			0.4	0.7	
V_{IL}	Control Input Logic Low	T_a = -40 to 125°C				0.8	V
V_{IH}	Control Input Logic High	T_a = -40 to 125°C		2			V
I_I	Control Input Current	V_I = 9 V, V_C = 6 V			10		µA
C_O	Output Bypass Capacitance	ESR = 0.1 to 10 Ω I_O = 0 to 500 mA		2	10		µF

ELECTRICAL CHARACTERISTICS FOR LF85AB (refer to the test circuits, T_j = 25°C, C_I = 0.1 µF, C_O = 2.2 µF unless otherwise specified.)

Symbol	Parameter	Test Conditions		Min.	Typ.	Max.	Unit
V_O	Output Voltage	I_O = 50 mA, V_I = 10.5 V		8.415	8.5	8.585	V
		I_O = 50 mA, V_I = 10.5 V, T_a = -25 to 85°C		8.33		8.67	
V_I	Operating Input Voltage	I_O = 500 mA				16	V
I_O	Output Current Limit				1		A
ΔV_O	Line Regulation	V_I = 9.5 to 16 V, I_O = 5 mA			8	42	mV
ΔV_O	Load Regulation	V_I = 9.8 V, I_O = 5 to 500 mA			8	42	mV
I_d	Quiescent Current	V_I = 9.5 to 16V, I_O = 0mA	ON MODE		0.7	1.5	mA
		V_I = 9.8 to 16V, I_O = 500mA				12	
		V_I = 9 V	OFF MODE		70	140	µA
SVR	Supply Voltage Rejection	I_O = 5 mA V_I = 10.5 ± 1 V	f = 120 Hz		72		dB
			f = 1 KHz		67		
			f = 10 KHz		57		
eN	Output Noise Voltage	B = 10 Hz to 100 KHz			50		µV
V_d	Dropout Voltage	I_O = 200 mA			0.2	0.35	V
		I_O = 500 mA			0.4	0.7	
V_{IL}	Control Input Logic Low	T_a = -40 to 125°C				0.8	V
V_{IH}	Control Input Logic High	T_a = -40 to 125°C		2			V
I_I	Control Input Current	V_I = 9 V, V_C = 6 V			10		µA
C_O	Output Bypass Capacitance	ESR = 0.1 to 10 Ω I_O = 0 to 500 mA		2	10		µF

ELECTRICAL CHARACTERISTICS FOR LF85C (refer to the test circuits, T_j = 25°C, C_I = 0.1 µF, C_O = 2.2 µF unless otherwise specified.)

Symbol	Parameter	Test Conditions		Min.	Typ.	Max.	Unit
V_O	Output Voltage	I_O = 50 mA, V_I = 10.5 V		8.33	8.5	8.67	V
		I_O = 50 mA, V_I = 10.5 V, T_a = -25 to 85°C		8.16		8.84	
V_I	Operating Input Voltage	I_O = 500 mA				16	V
I_O	Output Current Limit				1		A
ΔV_O	Line Regulation	V_I = 9.5 to 16 V, I_O = 5 mA			8	42	mV
ΔV_O	Load Regulation	V_I = 9.8 V, I_O = 5 to 500 mA			8	42	mV
I_d	Quiescent Current	V_I = 9.5 to 16V, I_O = 0mA	ON MODE		0.7	1.5	mA
		V_I = 9.8 to 16V, I_O = 500mA				12	
		V_I = 9 V	OFF MODE		70	140	µA
SVR	Supply Voltage Rejection	I_O = 5 mA V_I = 10.5 ± 1 V	f = 120 Hz		72		dB
			f = 1 KHz		67		
			f = 10 KHz		57		
eN	Output Noise Voltage	B = 10 Hz to 100 KHz			50		µV
V_d	Dropout Voltage	I_O = 200 mA			0.2	0.35	V
		I_O = 500 mA			0.4	0.7	
V_{IL}	Control Input Logic Low	T_a = -40 to 125°C				0.8	V
V_{IH}	Control Input Logic High	T_a = -40 to 125°C		2			V
I_I	Control Input Current	V_I = 9 V, V_C = 6 V			10		µA
C_O	Output Bypass Capacitance	ESR = 0.1 to 10 Ω I_O = 0 to 500 mA		2	10		µF

ELECTRICAL CHARACTERISTICS FOR LF90AB (refer to the test circuits, T_j = 25°C, C_I = 0.1 µF, C_O = 2.2 µF unless otherwise specified.)

Symbol	Parameter	Test Conditions		Min.	Typ.	Max.	Unit
V_O	Output Voltage	I_O = 50 mA, V_I = 11 V		8.91	9	9.09	V
		I_O = 50 mA, V_I = 11 V, T_a = -25 to 85°C		8.82		9.18	
V_I	Operating Input Voltage	I_O = 500 mA				16	V
I_O	Output Current Limit				1		A
ΔV_O	Line Regulation	V_I = 10 to 16 V, I_O = 5 mA			9	45	mV
ΔV_O	Load Regulation	V_I = 10.3 V, I_O = 5 to 500 mA			9	45	mV
I_d	Quiescent Current	V_I = 10 to 16V, I_O = 0mA	ON MODE		0.7	1.5	mA
		V_I = 10.3 to 16V, I_O = 500mA				12	
		V_I = 10 V	OFF MODE		70	140	µA
SVR	Supply Voltage Rejection	I_O = 5 mA V_I = 11 ± 1 V	f = 120 Hz		71		dB
			f = 1 KHz		66		
			f = 10 KHz		56		
eN	Output Noise Voltage	B = 10 Hz to 100 KHz			50		µV
V_d	Dropout Voltage	I_O = 200 mA			0.2	0.35	V
		I_O = 500 mA			0.4	0.7	
V_{IL}	Control Input Logic Low	T_a = -40 to 125°C				0.8	V
V_{IH}	Control Input Logic High	T_a = -40 to 125°C		2			V
I_I	Control Input Current	V_I = 10 V, V_C = 6 V			10		µA
C_O	Output Bypass Capacitance	ESR = 0.1 to 10 Ω I_O = 0 to 500 mA		2	10		µF

ELECTRICAL CHARACTERISTICS FOR LF90C (refer to the test circuits, T_j = 25°C, C_I = 0.1 µF, C_O = 2.2 µF unless otherwise specified.)

Symbol	Parameter	Test Conditions		Min.	Typ.	Max.	Unit
V_O	Output Voltage	I_O = 50 mA, V_I = 11 V		8.82	9	9.18	V
		I_O = 50 mA, V_I = 11 V, T_a = -25 to 85°C		8.64		9.36	
V_I	Operating Input Voltage	I_O = 500 mA				16	V
I_O	Output Current Limit				1		A
ΔV_O	Line Regulation	V_I = 10 to 16 V, I_O = 5 mA			9	45	mV
ΔV_O	Load Regulation	V_I = 10.3 V, I_O = 5 to 500 mA			9	45	mV
I_d	Quiescent Current	V_I = 10 to 16V, I_O = 0mA	ON MODE		0.7	1.5	mA
		V_I = 10.3 to 16V, I_O = 500mA				12	
		V_I = 10 V	OFF MODE		70	140	µA
SVR	Supply Voltage Rejection	I_O = 5 mA V_I = 11 ± 1 V	f = 120 Hz		71		dB
			f = 1 KHz		66		
			f = 10 KHz		56		
eN	Output Noise Voltage	B = 10 Hz to 100 KHz			50		µV
V_d	Dropout Voltage	I_O = 200 mA			0.2	0.35	V
		I_O = 500 mA			0.4	0.7	
V_{IL}	Control Input Logic Low	T_a = -40 to 125°C				0.8	V
V_{IH}	Control Input Logic High	T_a = -40 to 125°C		2			V
I_I	Control Input Current	V_I = 10 V, V_C = 6 V			10		µA
C_O	Output Bypass Capacitance	ESR = 0.1 to 10 Ω I_O = 0 to 500 mA		2	10		µF

ELECTRICAL CHARACTERISTICS FOR LF120AB (refer to the test circuits, T_j = 25°C, C_I = 0.1 µF, C_O = 2.2 µF unless otherwise specified.)

Symbol	Parameter	Test Conditions		Min.	Typ.	Max.	Unit
V_O	Output Voltage	I_O = 50 mA, V_I = 15 V		11.88	12	12.12	V
		I_O = 50 mA, V_I = 15 V, T_a = -25 to 85°C		11.76		12.24	
V_I	Operating Input Voltage	I_O = 500 mA				16	V
I_O	Output Current Limit				1		A
ΔV_O	Line Regulation	V_I = 13 to 16 V, I_O = 5 mA			12	60	mV
ΔV_O	Load Regulation	V_I = 13.3 V, I_O = 5 to 500 mA			12	60	mV
I_d	Quiescent Current	V_I = 13 to 16V, I_O = 0mA	ON MODE		0.7	1.5	mA
		V_I = 13.3 to 16V, I_O = 500mA				12	
		V_I = 13 V	OFF MODE		70	140	µA
SVR	Supply Voltage Rejection	I_O = 5 mA V_I = 14 ± 1 V	f = 120 Hz		69		dB
			f = 1 KHz		64		
			f = 10 KHz		54		
eN	Output Noise Voltage	B = 10 Hz to 100 KHz			50		µV
V_d	Dropout Voltage	I_O = 200 mA			0.2	0.35	V
		I_O = 500 mA			0.4	0.7	
V_{IL}	Control Input Logic Low	T_a = -40 to 125°C				0.8	V
V_{IH}	Control Input Logic High	T_a = -40 to 125°C		2			V
I_I	Control Input Current	V_I = 13 V, V_C = 6 V			10		µA
C_O	Output Bypass Capacitance	ESR = 0.1 to 10 Ω I_O = 0 to 500 mA		2	10		µF

ELECTRICAL CHARACTERISTICS FOR LF120C (refer to the test circuits, T_j = 25°C, C_I = 0.1 µF, C_O = 2.2 µF unless otherwise specified.)

Symbol	Parameter	Test Conditions		Min.	Typ.	Max.	Unit
V_O	Output Voltage	I_O = 50 mA, V_I = 14 V		11.76	12	12.24	V
		I_O = 50 mA, V_I = 14 V, T_a = -25 to 85°C		11.52		12.48	
V_I	Operating Input Voltage	I_O = 500 mA				16	V
I_O	Output Current Limit				1		A
ΔV_O	Line Regulation	V_I = 13 to 16 V, I_O = 5 mA			12	60	mV
ΔV_O	Load Regulation	V_I = 13.3 V, I_O = 5 to 500 mA			12	60	mV
I_d	Quiescent Current	V_I = 13 to 16V, I_O = 0mA	ON MODE		0.7	1.5	mA
		V_I = 13.3 to 16V, I_O = 500mA				12	
		V_I = 13 V	OFF MODE		70	140	µA
SVR	Supply Voltage Rejection	I_O = 5 mA V_I = 14 ± 1 V	f = 120 Hz		69		dB
			f = 1 KHz		64		
			f = 10 KHz		54		
eN	Output Noise Voltage	B = 10 Hz to 100 KHz			50		µV
V_d	Dropout Voltage	I_O = 200 mA			0.2	0.35	V
		I_O = 500 mA			0.4	0.7	
V_{IL}	Control Input Logic Low	T_a = -40 to 125°C				0.8	V
V_{IH}	Control Input Logic High	T_a = -40 to 125°C		2			V
I_I	Control Input Current	V_I = 13 V, V_C = 6 V			10		µA
C_O	Output Bypass Capacitance	ESR = 0.1 to 10 Ω I_O = 0 to 500 mA		2	10		µF

TYPICAL PERFORMANCE CHARACTERISTICS (unless otherwise specified $V_{O(NOM)}$ = 3.3 V)

Figure 1 : Dropout Voltage vs Output Current

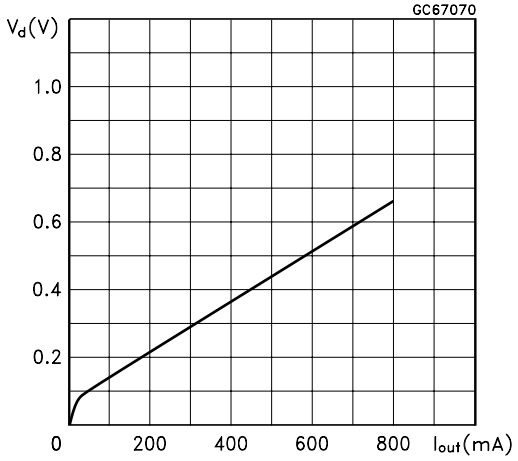

Figure 2 : Dropout Voltage vs Temperature

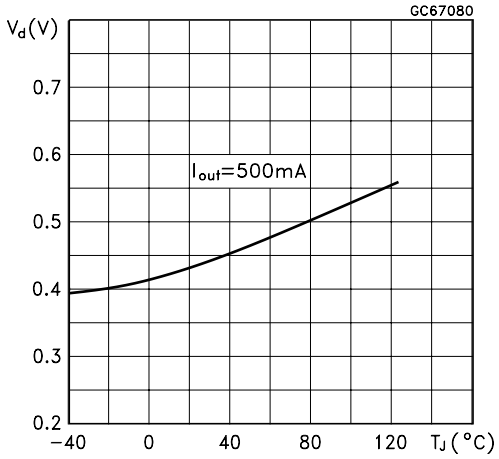

Figure 3 : Supply Current vs Input Voltage

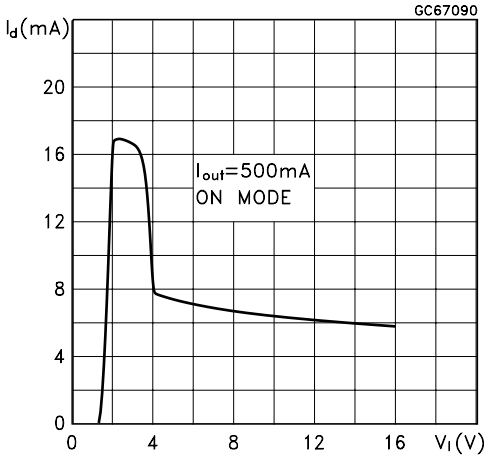

Figure 4 : Supply Current vs Input Voltage

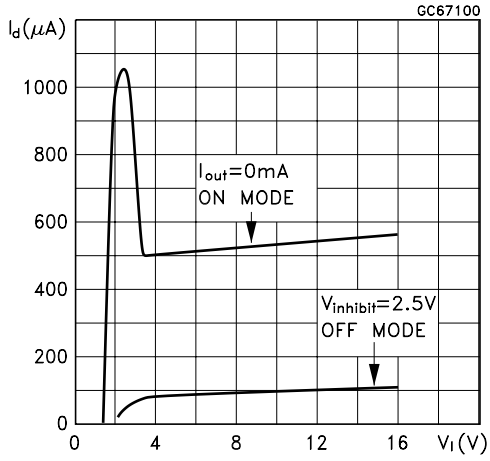

Figure 5 : Short Circuit Current vs Input Voltage

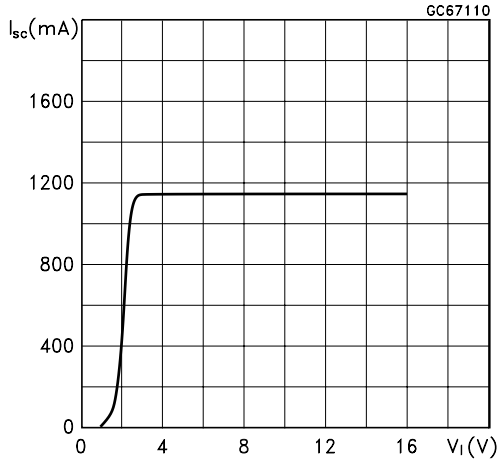

Figure 6 : Supply Current vs Temperature

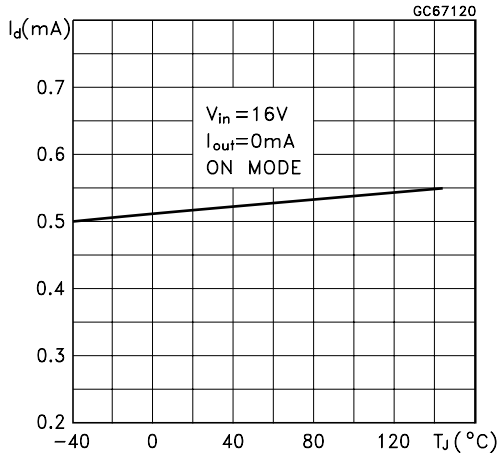

Logic Controlled Precision 3.3/5.0V Selectable Output

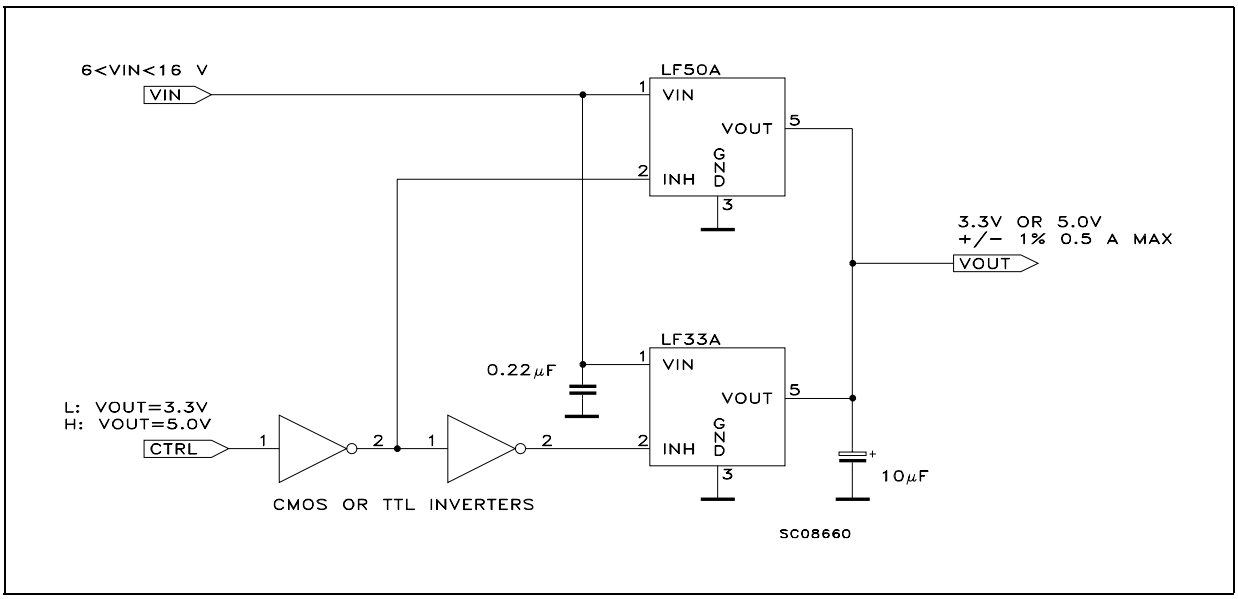

Sequential Multi-Output Supply

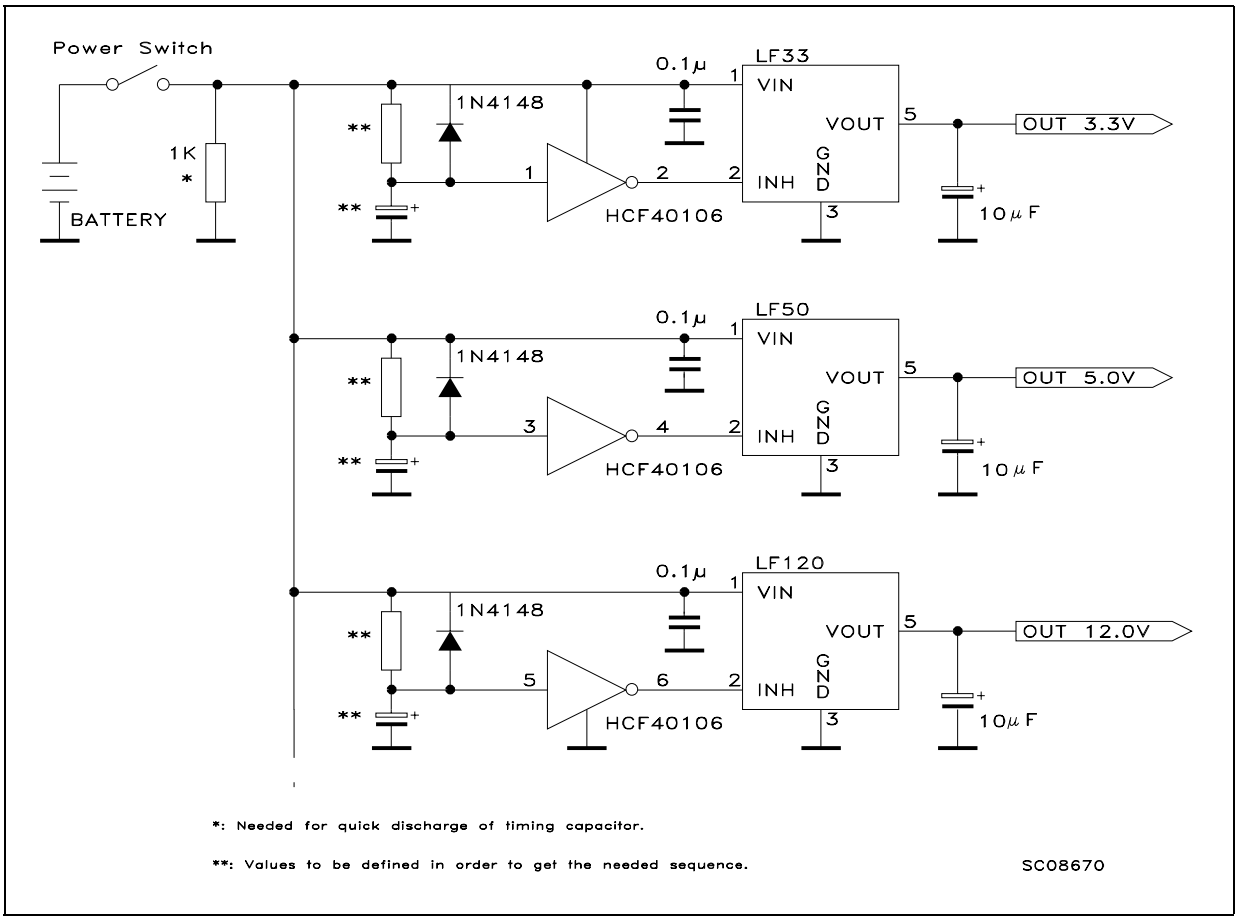

Multiple Supply With ON/OFF Toggle Switch

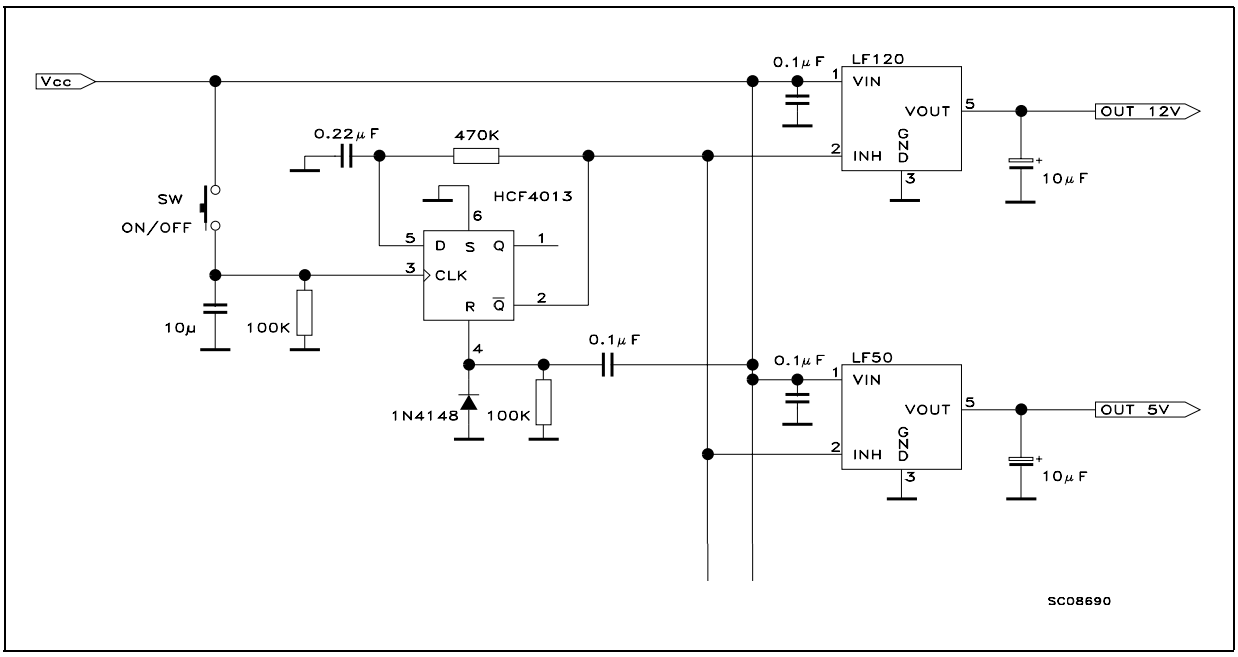

Basic Inhibit Functions

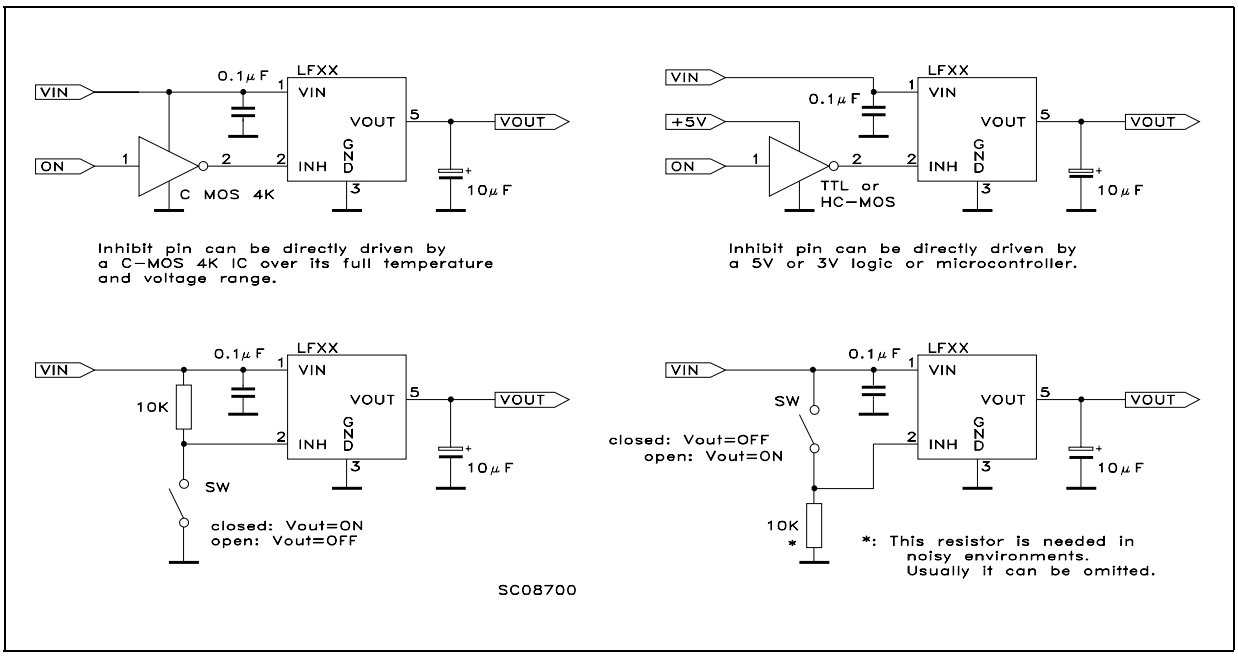

Delayed Turn-On

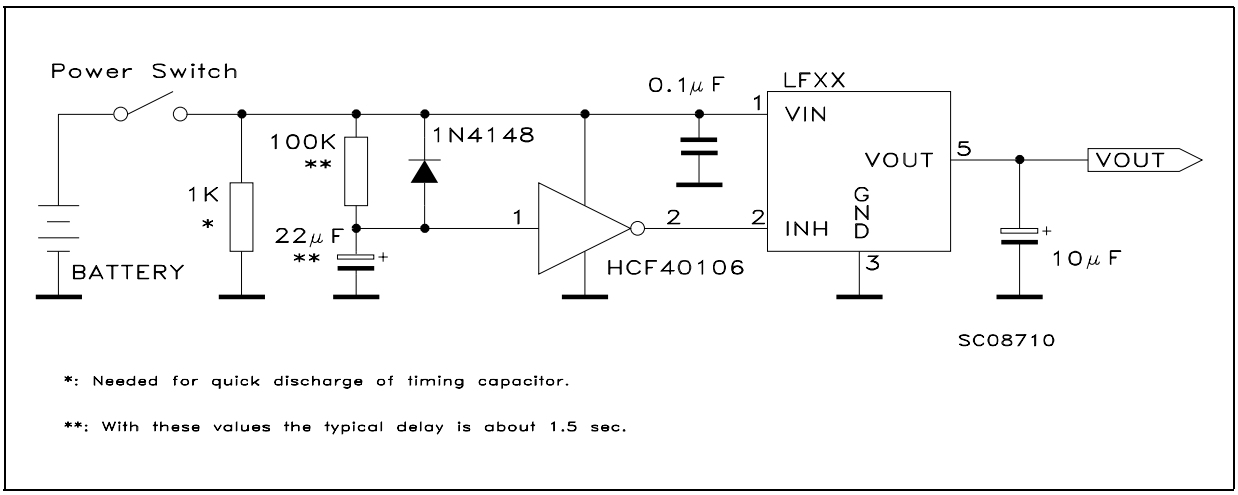

Low Voltage Bulb Blinker

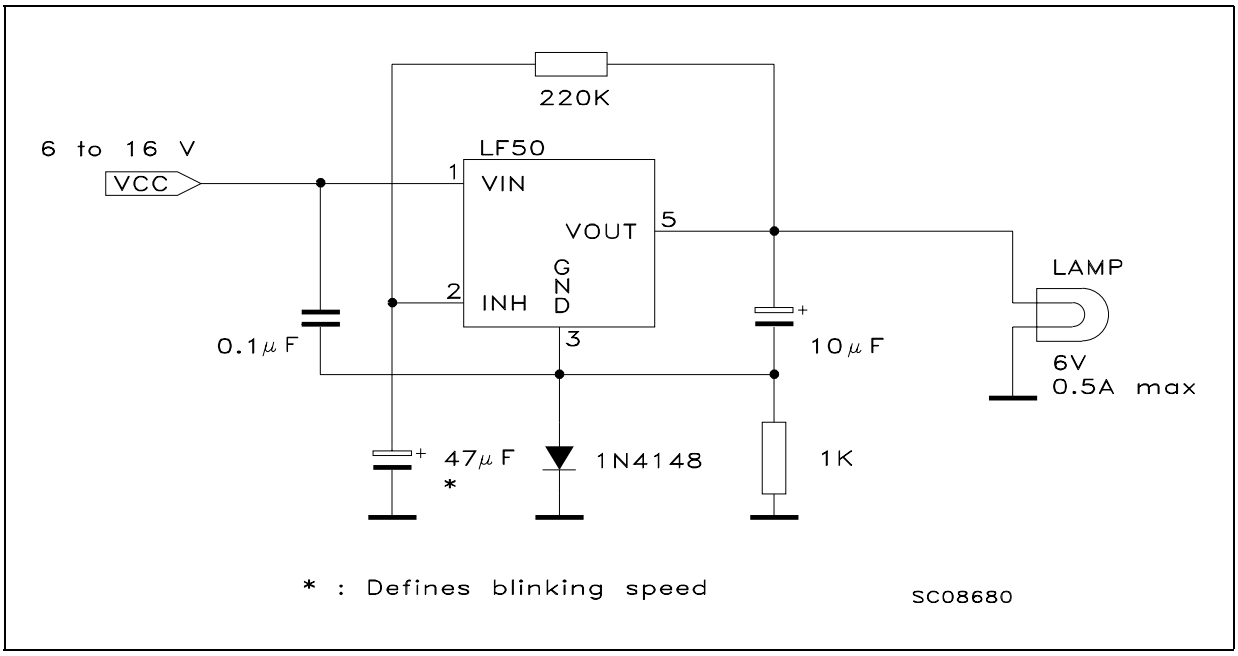

PENTAWATT (VERTICAL) MECHANICAL DATA

DIM.	mm.			inch		
	MIN.	TYP	MAX.	MIN.	TYP.	MAX.
A			4.8			0.189
C			1.37			0.054
D	2.4		2.8	0.094		0.110
D1	1.2		1.35	0.047		0.053
E	0.35		0.55	0.014		0.022
F	0.8		1.05	0.031		0.041
F1	1		1.4	0.039		0.055
G	3.2	3.4	3.6	0.126	0.134	0.142
G1	6.6	6.8	7	0.260	0.268	0.276
H2			10.4			0.409
H3	10.05		10.4	0.396		0.409
L		17.85			0.703	
L1		15.75			0.620	
L2		21.4			0.843	
L3		22.5			0.886	
L5	2.6		3	0.102		0.118
L6	15.1		15.8	0.594		0.622
L7	6		6.6	0.236		0.260
M		4.5			0.177	
M1		4			0.157	
Dia1	3.65		3.85	0.144		0.152

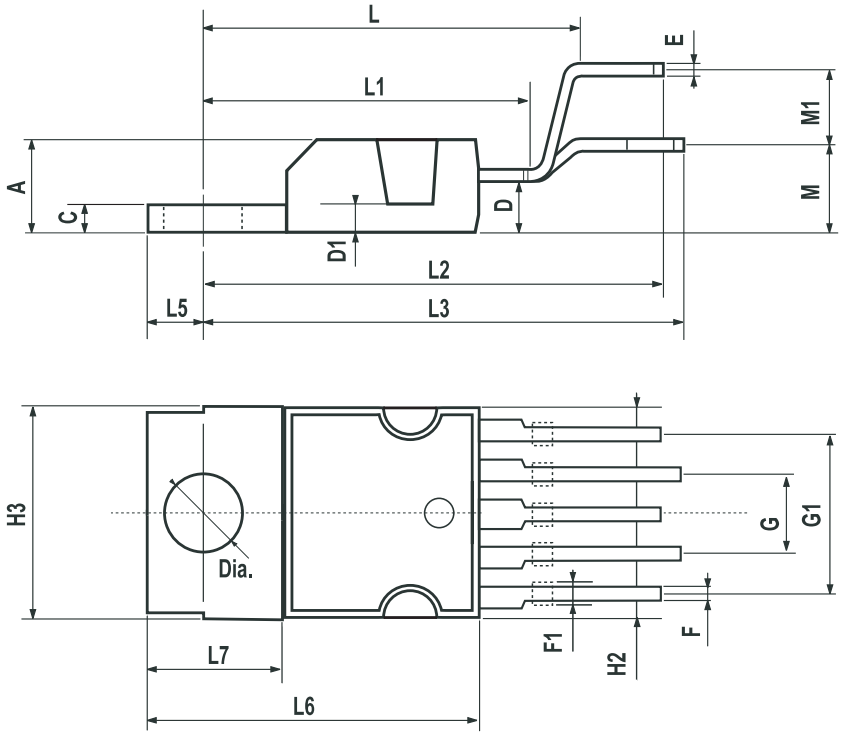

P010E

TO-220 MECHANICAL DATA

DIM.	mm.			inch		
	MIN.	TYP	MAX.	MIN.	TYP.	MAX.
A	4.40		4.60	0.173		0.181
C	1.23		1.32	0.048		0.051
D	2.40		2.72	0.094		0.107
D1		1.27			0.050	
E	0.49		0.70	0.019		0.027
F	0.61		0.88	0.024		0.034
F1	1.14		1.70	0.044		0.067
F2	1.14		1.70	0.044		0.067
G	4.95		5.15	0.194		0.203
G1	2.4		2.7	0.094		0.106
H2	10.0		10.40	0.393		0.409
L2		16.4			0.645	
L4	13.0		14.0	0.511		0.551
L5	2.65		2.95	0.104		0.116
L6	15.25		15.75	0.600		0.620
L7	6.2		6.6	0.244		0.260
L9	3.5		3.93	0.137		0.154
DIA.	3.75		3.85	0.147		0.151

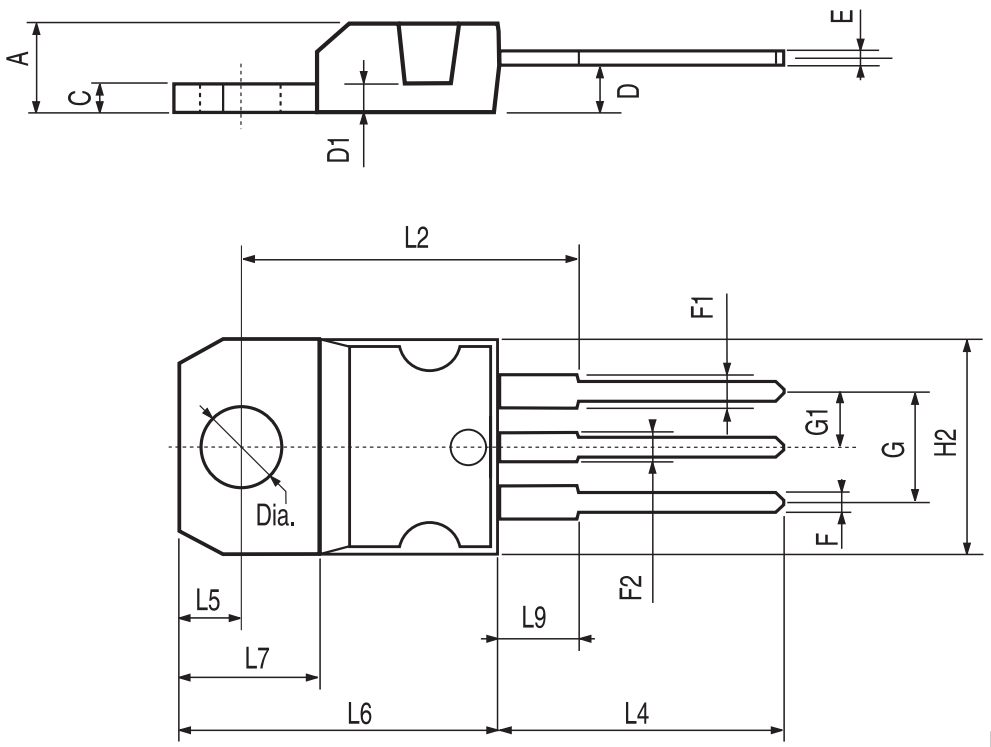

TO-220FP MECHANICAL DATA

DIM.	mm.			inch		
	MIN.	TYP	MAX.	MIN.	TYP.	MAX.
A	4.40		4.60	0.173		0.181
B	2.5		2.7	0.098		0.106
D	2.5		2.75	0.098		0.108
E	0.45		0.70	0.017		0.027
F	0.75		1	0.030		0.039
F1	1.15		1.50	0.045		0.059
F2	1.15		1.50	0.045		0.059
G	4.95		5.2	0.194		0.204
G1	2.4		2.7	0.094		0.106
H	10.0		10.40	0.393		0.409
L2		16			0.630	
L3	28.6		30.6	1.126		1.204
L4	9.8		10.6	0.385		0.417
L6	15.9		16.4	0.626		0.645
L7	9		9.3	0.354		0.366
DIA.	3		3.2	0.118		0.126

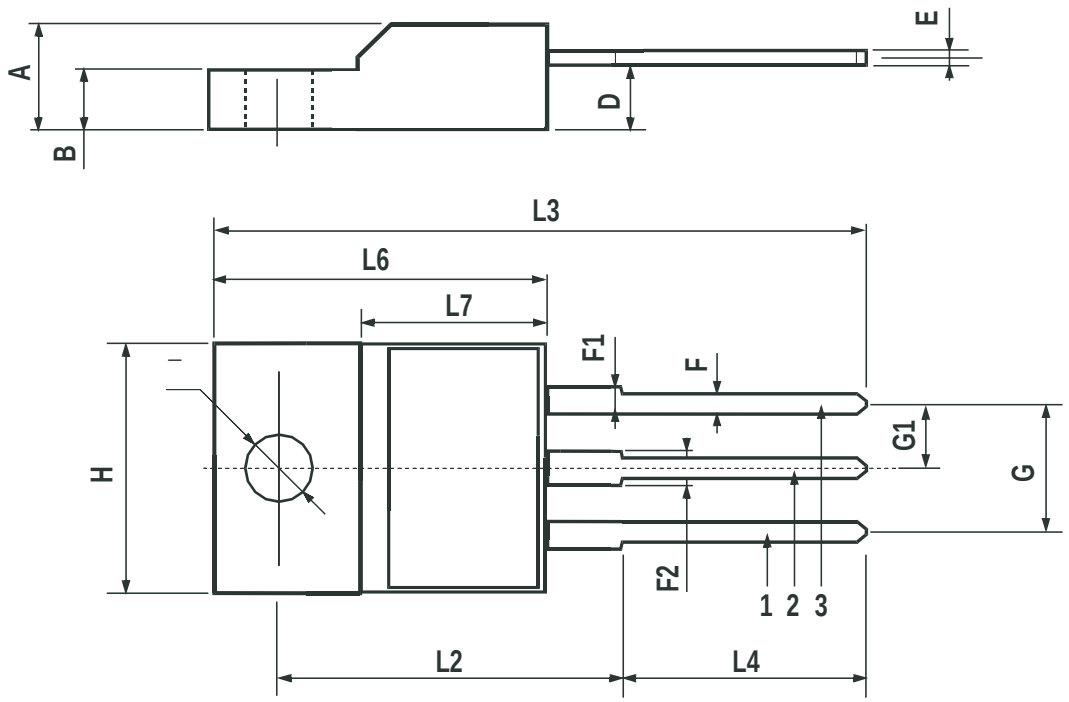

7012510/F

DPAK MECHANICAL DATA

DIM.	mm.			inch		
	MIN.	TYP	MAX.	MIN.	TYP.	MAX.
A	2.2		2.4	0.086		0.094
A1	0.9		1.1	0.035		0.043
A2	0.03		0.23	0.001		0.009
B	0.64		0.9	0.025		0.035
B2	5.2		5.4	0.204		0.212
C	0.45		0.6	0.017		0.023
C2	0.48		0.6	0.019		0.023
D	6		6.2	0.236		0.244
E	6.4		6.6	0.252		0.260
G	4.4		4.6	0.173		0.181
H	9.35		10.1	0.368		0.397
L2		0.8			0.031	
L4	0.6		1	0.023		0.039

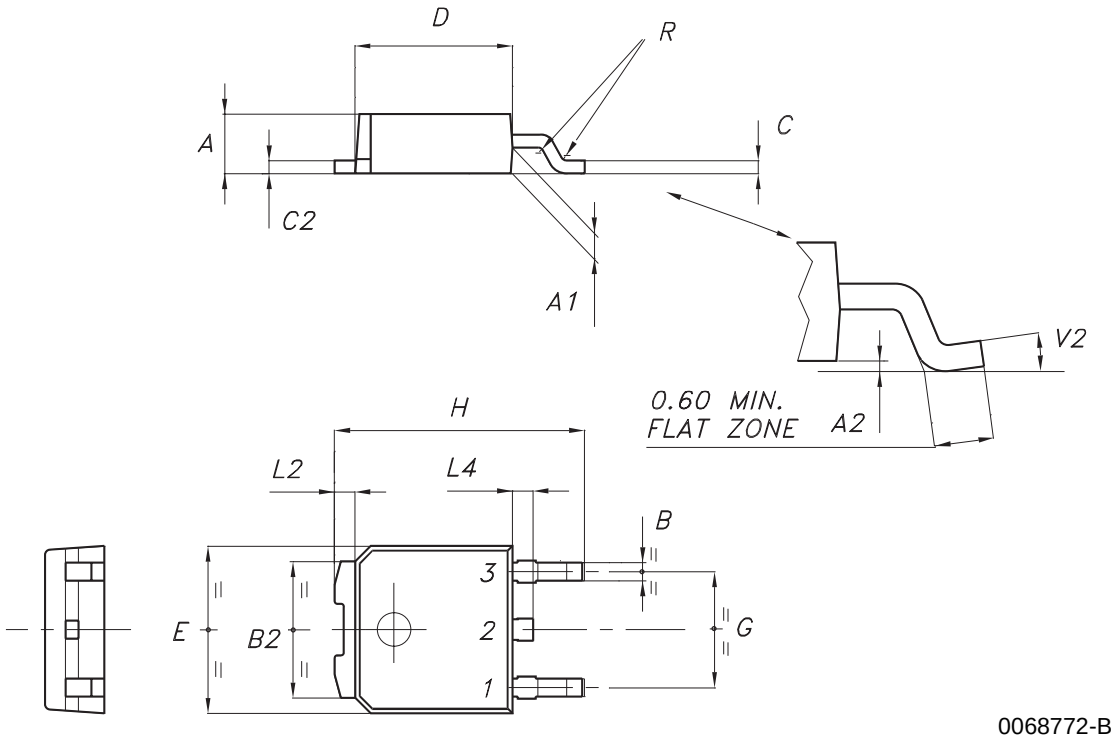

PPAK MECHANICAL DATA

DIM.	mm.			inch		
	MIN.	TYP	MAX.	MIN.	TYP.	MAX.
A	2.2		2.4	0.086		0.094
A1	0.9		1.1	0.035		0.043
A2	0.03		0.23	0.001		0.009
B	0.4		0.6	0.015		0.023
B2	5.2		5.4	0.204		0.212
C	0.45		0.6	0.017		0.023
C2	0.48		0.6	0.019		0.023
D	6		6.2	0.236		0.244
E	6.4		6.6	0.252		0.260
G	4.9		5.25	0.193		0.206
G1	2.38		2.7	0.093		0.106
H	9.35		10.1	0.368		0.397
L2		0.8			0.031	
L4	0.6		1	0.023		0.039

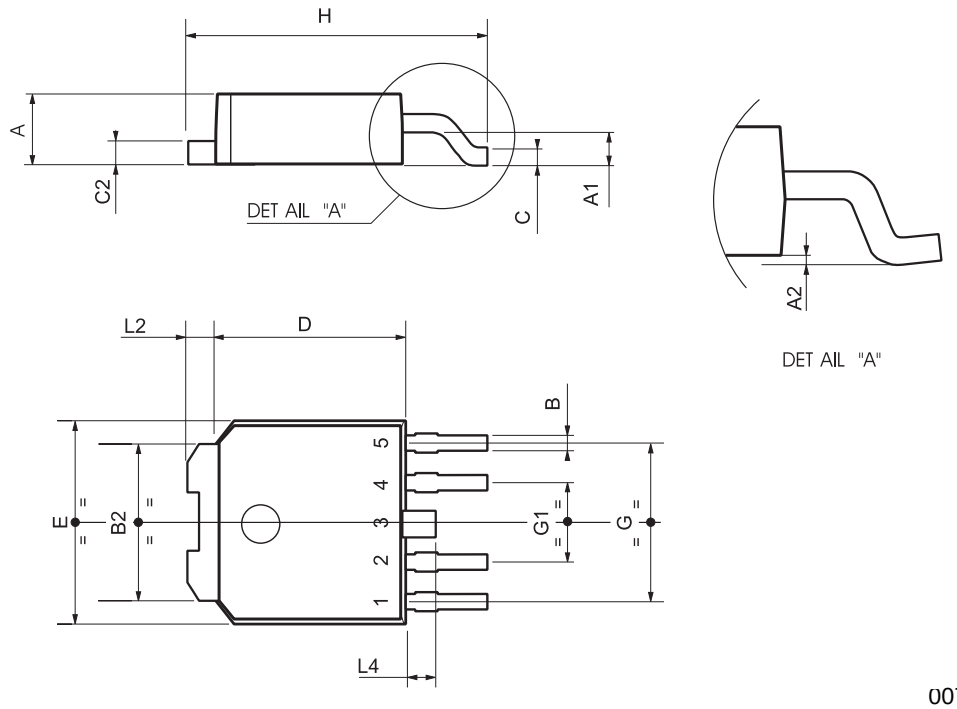

Tape & Reel DPAK-PPAK MECHANICAL DATA

DIM.	mm.			inch		
	MIN.	TYP	MAX.	MIN.	TYP.	MAX.
A			180			7.086
C	12.8	13.0	13.2	0.504	0.512	0.519
D	20.2			0.795		
N	60			2.362		
T			14.4			0.567
Ao	6.80	6.90	7.00	0.268	0.272	0.2.76
Bo	10.40	10.50	10.60	0.409	0.413	0.417
Ko	2.55	2.65	2.75	0.100	0.104	0.105
Po	3.9	4.0	4.1	0.153	0.157	0.161
P	7.9	8.0	8.1	0.311	0.315	0.319

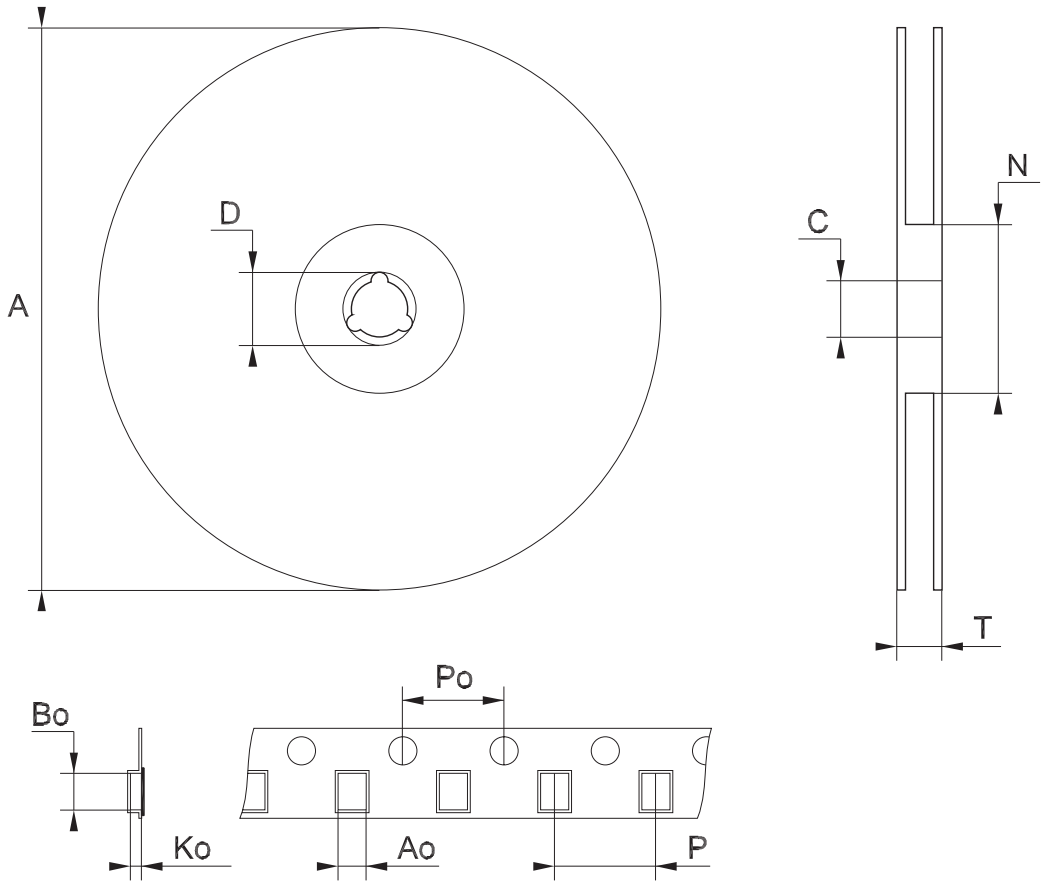

Note: Drawing not in scale

Information furnished is believed to be accurate and reliable. However, STMicroelectronics assumes no responsibility for the consequences of use of such information nor for any infringement of patents or other rights of third parties which may result from its use. No license is granted by implication or otherwise under any patent or patent rights of STMicroelectronics. Specifications mentioned in this publication are subject to change without notice. This publication supersedes and replaces all information previously supplied. STMicroelectronics products are not authorized for use as critical components in life support devices or systems without express written approval of STMicroelectronics.

© The ST logo is a registered trademark of STMicroelectronics

© 2003 STMicroelectronics - Printed in Italy - All Rights Reserved
STMicroelectronics GROUP OF COMPANIES
Australia - Brazil - Canada - China - Finland - France - Germany - Hong Kong - India - Israel - Italy - Japan - Malaysia - Malta - Morocco
Singapore - Spain - Sweden - Switzerland - United Kingdom - United States.
© http://www.st.com