LM124
LM224 - LM324

LOW POWER QUAD OPERATIONAL AMPLIFIERS

- WIDE GAIN BANDWIDTH : 1.3MHz
- INPUT COMMON-MODE VOLTAGE RANGE INCLUDES GROUND
- LARGE VOLTAGE GAIN : 100dB
- VERY LOW SUPPLY CURRENT/AMPLI : 375µA
- LOW INPUT BIAS CURRENT : 20nA
- LOW INPUT OFFSET VOLTAGE : 5mV max. (for more accurate applications, use the equivalent parts LM124A-LM224A-LM324A which feature 3mV max.)
- LOW INPUT OFFSET CURRENT : 2nA
- WIDE POWER SUPPLY RANGE :
  SINGLE SUPPLY : +3V TO +30V
  DUAL SUPPLIES : ±1.5V TO ±15V

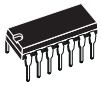

N
DIP14
(Plastic Package**)**

D
SO14
(Plastic Micropackage**)**

P
TSSOP14
(Thin Shrink Small Outline Package)

DESCRIPTION

These circuits consist of four independent, high gain, internally frequency compensated operational amplifiers. They operate from a single power supply over a wide range of voltages. Operation from split power supplies is also possible and the low power supply current drain is independent of the magnitude of the power supply voltage.

ORDER CODE

Part Number	Temperature Range	Package		
		N	D	P
LM124	-55°C, +125°C	•	•	•
LM224	-40°C, +105°C	•	•	•
LM324	0°C, +70°C	•	•	•
Example : LM224N				

N = Dual in Line Package (DIP)
D = Small Outline Package (SO) - also available in Tape & Reel (DT)
P = Thin Shrink Small Outline Package (TSSOP) - only available in Tape &Reel (PT)

PIN CONNECTIONS (top view)

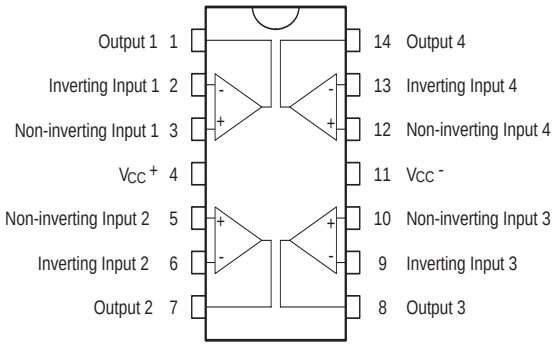

SCHEMATIC DIAGRAM (1/4 LM124)

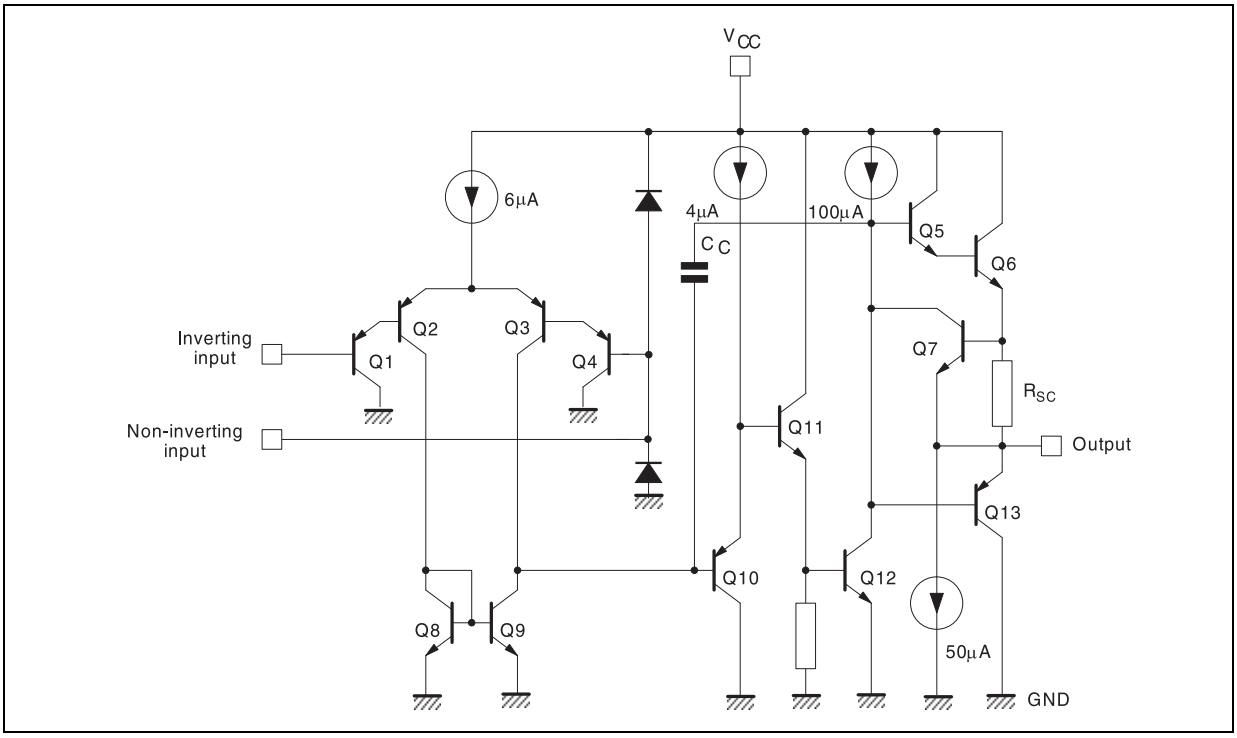

ABSOLUTE MAXIMUM RATINGS

Symbol	Parameter	LM124	LM224	LM324	Unit
V_{CC}	Supply voltage	±16 or 32			V
V_i	Input Voltage	-0.3 to +32			V
V_{id}	Differential Input Voltage [1]	+32			V
P_{tot}	Power Dissipation N Suffix D Suffix	500	500 400	500 400	mW mW
	Output Short-circuit Duration [2]	Infinite			
I_{in}	Input Current [3]	50	50	50	mA
T_{oper}	Opearting Free-air Temperature Range	-55 to +125	-40 to +105	0 to +70	°C
T_{stg}	Storage Temperature Range	-65 to +150			°C

1. Either or both input voltages must not exceed the magnitude of V_{CC}^+ or V_{CC}^-.
2. Short-circuits from the output to VCC can cause excessive heating if V_{CC} > 15V. The maximum output current is approximately 40mA independent of the magnitude of V_{CC}. Destructive dissipation can result from simultaneous short-circuit on all amplifiers.
3. This input current only exists when the voltage at any of the input leads is driven negative. It is due to the collector-base junction of the input PNP transistor becoming forward biased and thereby acting as input diodes clamps. In addition to this diode action, there is also NPN parasitic action on the IC chip. this transistor action can cause the output voltages of the Op-amps to go to the V_{CC} voltage level (or to ground for a large overdrive) for the time duration than an input is driven negative.
This is not destructive and normal output will set up again for input voltage higher than -0.3V.

ELECTRICAL CHARACTERISTICS

V_{CC}^{+} = +5V, V_{CC}^{-}= Ground, V_o = 1.4V, T_{amb} = +25°C (unless otherwise specified)

Symbol	Parameter	Min.	Typ.	Max.	Unit
V_{io}	Input Offset Voltage - note 1) T_{amb} = +25°C LM324 $T_{min} \le T_{amb} \le T_{max}$ LM324		2	5 7 7 9	mV
I_{io}	Input Offset Current T_{amb} = +25°C $T_{min} \le T_{amb} \le T_{max}$		2	30 100	nA
I_{ib}	Input Bias Current - note 2) T_{amb} = +25°C $T_{min} \le T_{amb} \le T_{max}$		20	150 300	nA
A_{vd}	Large Signal Voltage Gain V_{CC}^{+} = +15V, R_L = 2kΩ, V_o = 1.4V to 11.4V T_{amb} = +25°C $T_{min} \le T_{amb} \le T_{max}$	50 25	100		V/mV
SVR	Supply Voltage Rejection Ratio ($R_s \le$ 10kΩ) V_{CC}^{+} = 5V to 30V T_{amb} = +25°C $T_{min} \le T_{amb} \le T_{max}$	65 65	110		dB
I_{CC}	Supply Current, all Amp, no load T_{amb} = +25°C V_{CC} = +5V V_{CC} = +30V $T_{min} \le T_{amb} \le T_{max}$ V_{CC} = +5V V_{CC} = +30V		0.7 1.5 0.8 1.5	1.2 3 1.2 3	mA
V_{icm}	Input Common Mode Voltage Range V_{CC} = +30V - note 3) T_{amb} = +25°C $T_{min} \le T_{amb} \le T_{max}$	0 0		V_{CC} -1.5 V_{CC} -2	V
CMR	Common Mode Rejection Ratio ($R_s \le$ 10kΩ) T_{amb} = +25°C $T_{min} \le T_{amb} \le T_{max}$	70 60	80		dB
I_{source}	Output Current Source (V_{id} = +1V) V_{CC} = +15V, V_o = +2V	20	40	70	mA
I_{sink}	Output Sink Current (V_{id} = -1V) V_{CC} = +15V, V_o = +2V V_{CC} = +15V, V_o = +0.2V	10 12	20 50		mA µA
V_{OH}	High Level Output Voltage V_{CC} = +30V T_{amb} = +25°C R_L = 2kΩ $T_{min} \le T_{amb} \le T_{max}$ T_{amb} = +25°C R_L = 10kΩ $T_{min} \le T_{amb} \le T_{max}$ V_{CC} = +5V, R_L = 2kΩ T_{amb} = +25°C $T_{min} \le T_{amb} \le T_{max}$	26 26 27 27 3.5 3	27 28		V

Symbol	Parameter	Min.	Typ.	Max.	Unit
V_{OL}	Low Level Output Voltage (R_L = 10kΩ) T_{amb} = +25°C $T_{min} \leq T_{amb} \leq T_{max}$		5	20 20	mV
SR	Slew Rate V_{CC} = 15V, V_i = 0.5 to 3V, R_L = 2kΩ, C_L = 100pF, unity Gain		0.4		V/µs
GBP	Gain Bandwidth Product V_{CC} = 30V, f =100kHz,V_{in} = 10mV, R_L = 2kΩ, C_L = 100pF		1.3		MHz
THD	Total Harmonic Distortion f = 1kHz, A_v = 20dB, R_L = 2kΩ, V_o = $2V_{pp}$, C_L = 100pF, V_{CC} = 30V		0.015		%
e_n	Equivalent Input Noise Voltage f = 1kHz, R_s = 100Ω, V_{CC} = 30V		40		$\frac{nV}{\sqrt{Hz}}$
DV_{io}	Input Offset Voltage Drift		7	30	µV/°C
DI_{Iio}	Input Offset Current Drift		10	200	pA/°C
V_{o1}/V_{o2}	Channel Separation - note 4) 1kHz ≤ f ≤ 20kHZ		120		dB

1. V_o = 1.4V, R_s = 0Ω, 5V < V_{CC}^+ < 30V, 0 < V_{ic} < V_{CC}^+ - 1.5V
2. The direction of the input current is out of the IC. This current is essentially constant, independent of the state of the output so no loading change exists on the input lines.
3. The input common-mode voltage of either input signal voltage should not be allowed to go negative by more than 0.3V. The upper end of the common-mode voltage range is V_{CC}^+ - 1.5V, but either or both inputs can go to +32V without damage.
4. Due to the proximity of external components insure that coupling is not originating via stray capacitance between these external parts. This typically can be detected as this type of capacitance increases at higher frequences.

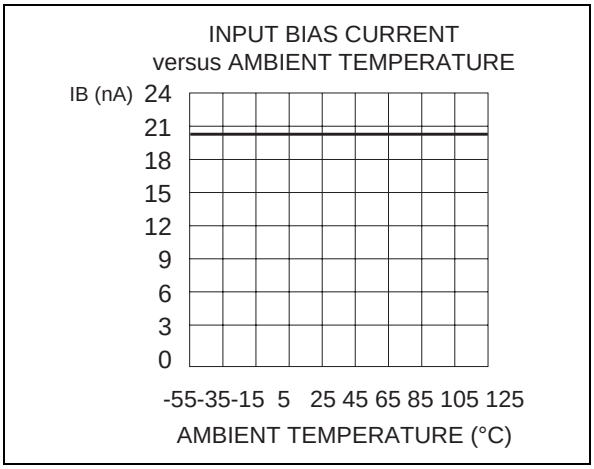
INPUT BIAS CURRENT
versus AMBIENT TEMPERATURE
IB (nA)
24
21
18
15
12
9
6
3
0
-55-35-15 5 25 45 65 85 105 125
AMBIENT TEMPERATURE (°C)

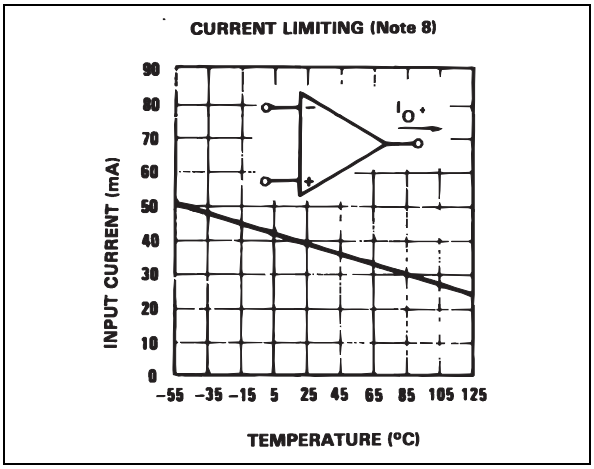
CURRENT LIMITING (Note 8)
INPUT CURRENT (mA)
90
80
70
60
50
40
30
20
10
0
IO
−55 −35 −15 5 25 45 65 85 105 125
TEMPERATURE (°C)

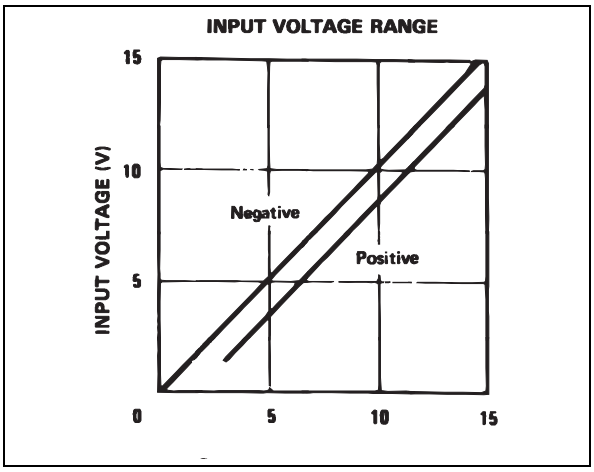
INPUT VOLTAGE RANGE
INPUT VOLTAGE (V)
15
10
5
0
Negative
Positive
5
10
15

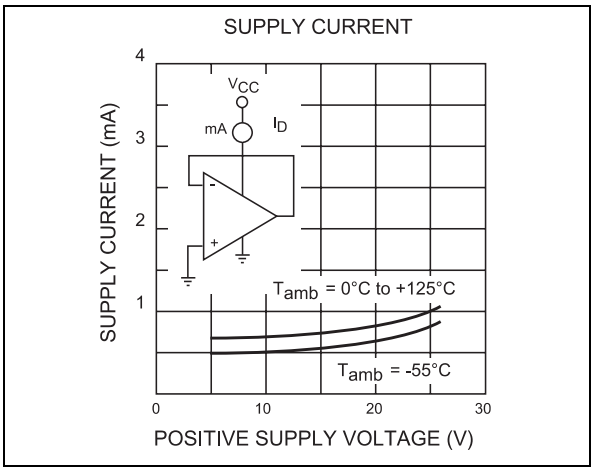
SUPPLY CURRENT
SUPPLY CURRENT (mA)
4
3
2
1
VCC
mA
ID
Tamb = 0°C to +125°C
Tamb = -55°C
0
10
20
30
POSITIVE SUPPLY VOLTAGE (V)

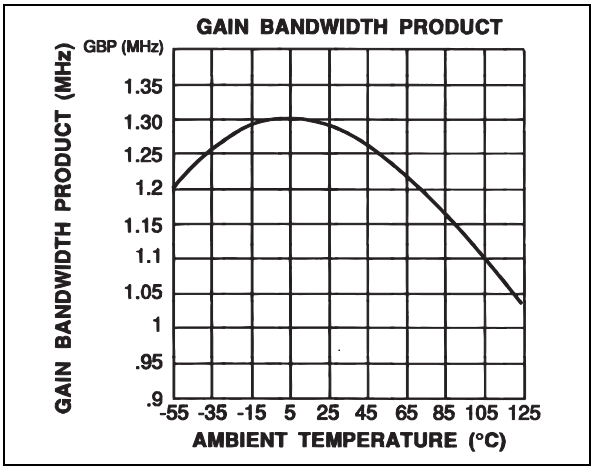
GAIN BANDWIDTH PRODUCT
GAIN BANDWIDTH PRODUCT (MHz)
GBP (MHz)
1.35
1.30
1.25
1.2
1.15
1.1
1.05
1
.95
.9
-55 -35 -15 5 25 45 65 85 105 125
AMBIENT TEMPERATURE (°C)

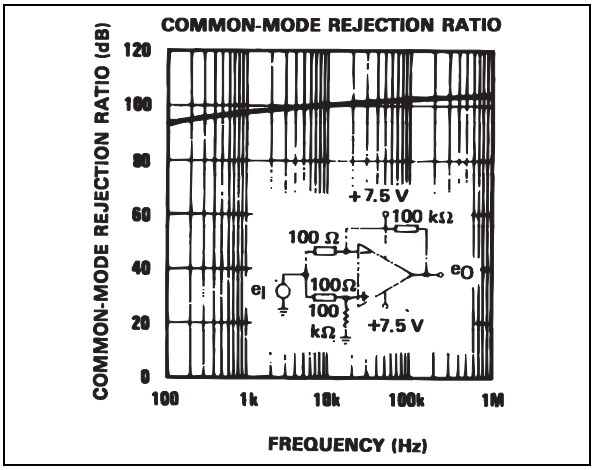
COMMON-MODE REJECTION RATIO
COMMON-MODE REJECTION RATIO (dB)
120
100
80
60
40
20
0
+7.5 V
100 kΩ
100 Ω
eI
100Ω
100 kΩ
+7.5 V
eO
100
1k
10k
100k
1M
FREQUENCY (Hz)

OPEN LOOP FREQUENCY RESPONSE

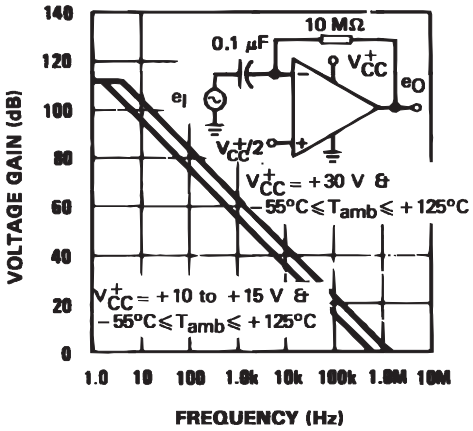

LARGE SIGNAL FREQUENCY RESPONSE

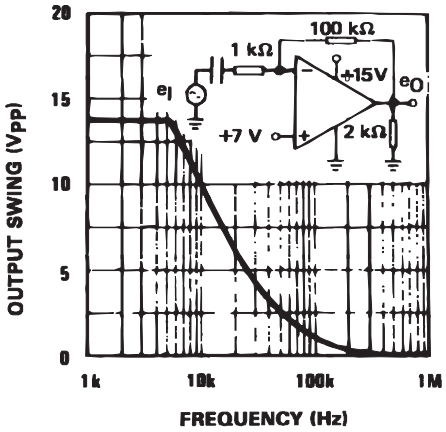

VOLTAGE FOLLOWER PULSE RESPONSE

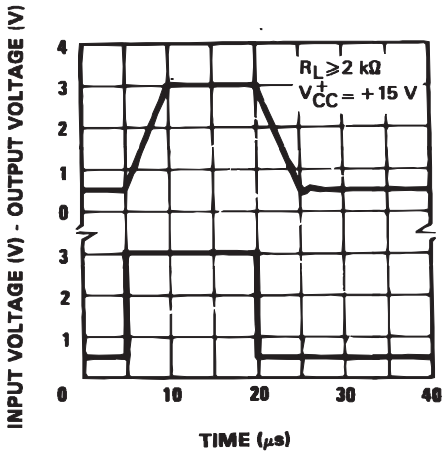

OUTPUT CHARACTERISTICS (CURRENT SINKING)

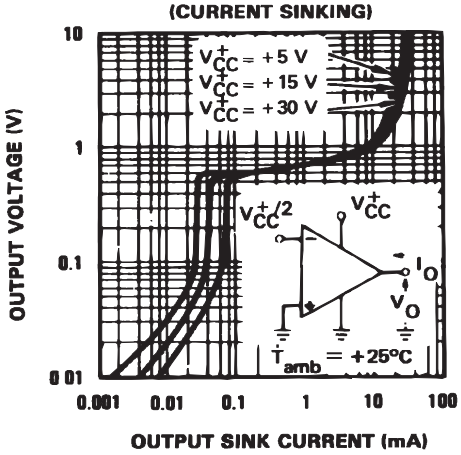

VOLTAGE FOLLOWER PULSE RESPONSE (SMALL SIGNAL)

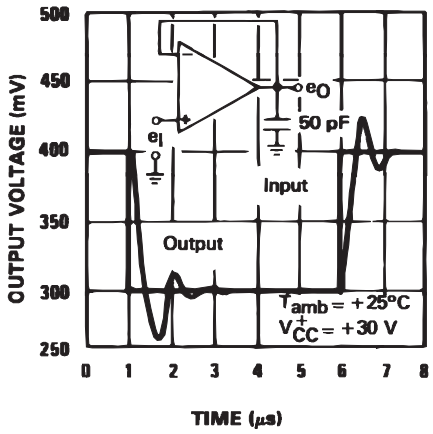

OUTPUT CHARACTERISTICS (CURRENT SOURCING)

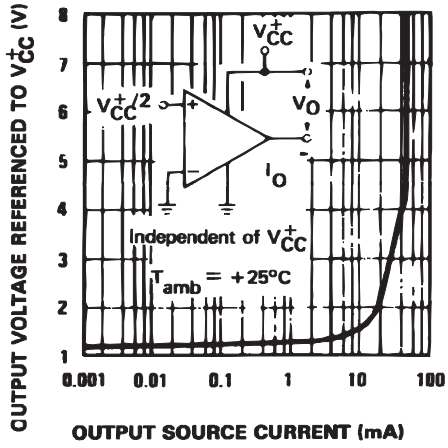

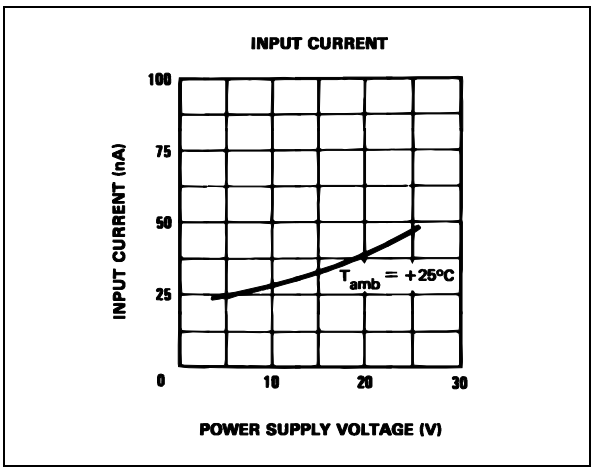

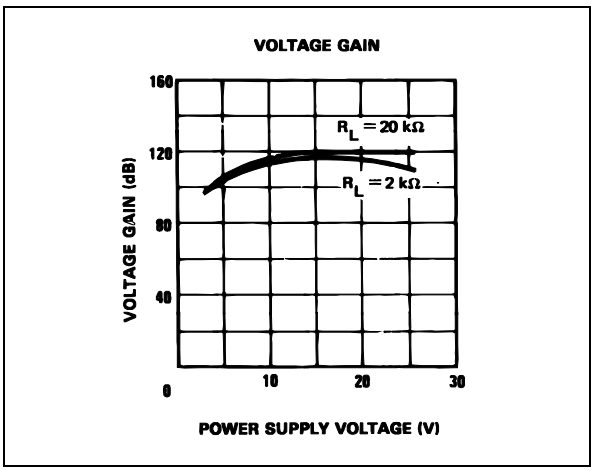

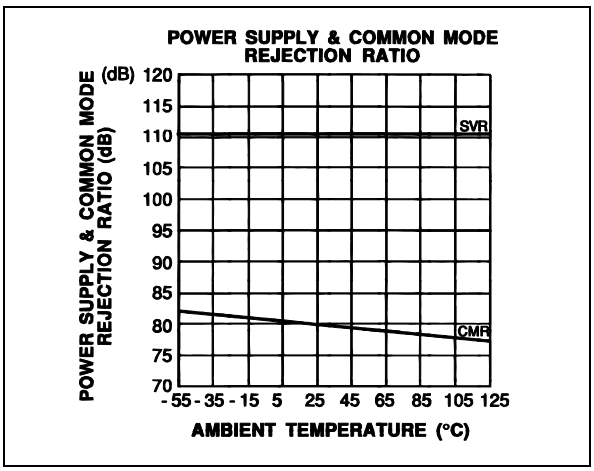

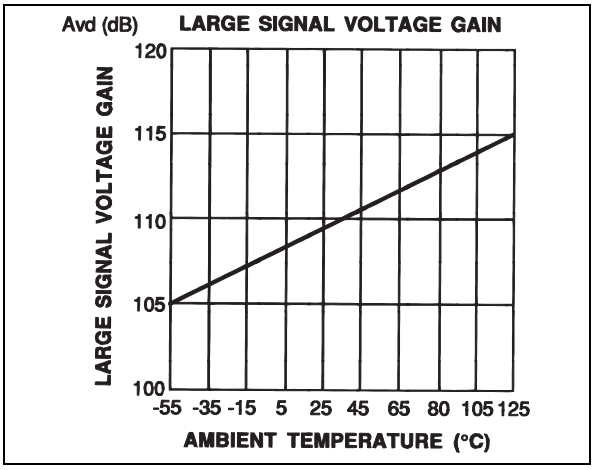

TYPICAL SINGLE - SUPPLY APPLICATIONS

AC COUPLED INVERTING AMPLIFIER

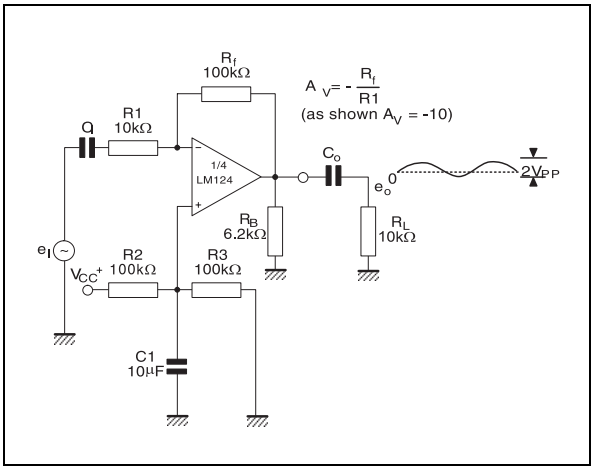

AC COUPLED NON INVERTING AMPLIFIER

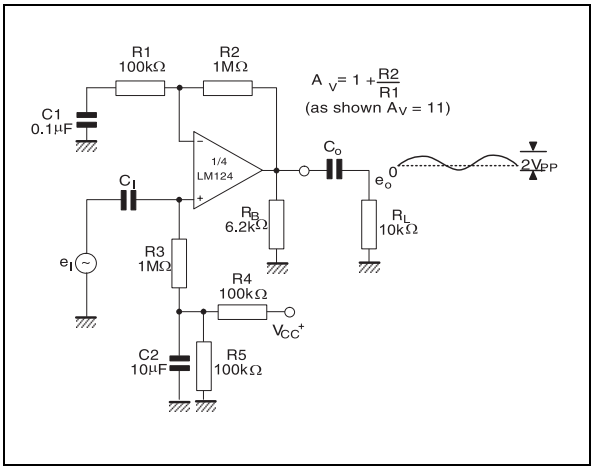

TYPICAL SINGLE - SUPPLY APPLICATIONS

NON-INVERTING DC GAIN

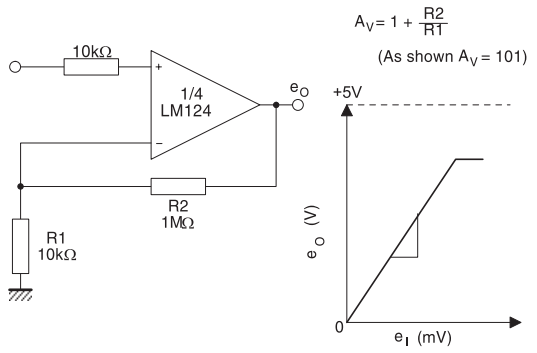

DC SUMMING AMPLIFIER

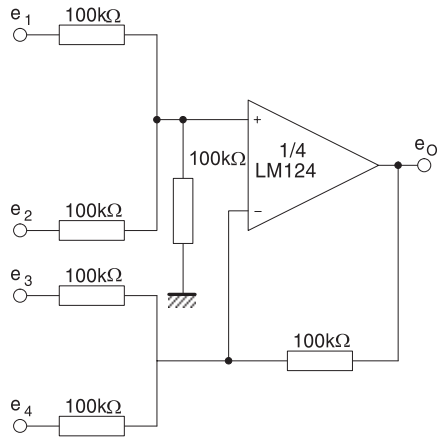

$e_0 = e_1 + e_2 - e_3 - e_4$
Where $(e_1 + e_2) \geq (e_3 + e_4)$
to keep $e_0 \geq 0V$

HIGH INPUT Z ADJUSTABLE GAIN DC INSTRUMENTATION AMPLIFIER

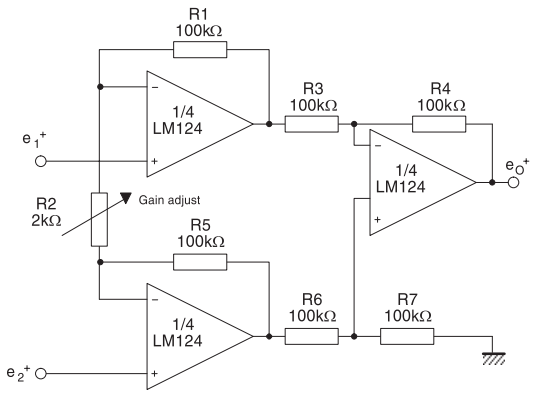

if R1 = R5 and R3 = R4 = R6 = R7

$$e_0 = \left[1 + \frac{2R_1}{R_2}\right] (e_2 - e_1)$$

As shown $e_0 = 101\ (e_2 - e_1)$.

LOW DRIFT PEAK DETECTOR

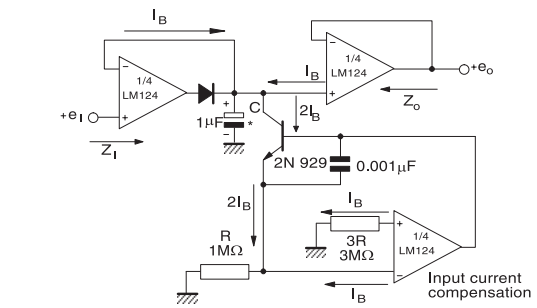

* Polycarbonate or polyethylene

TYPICAL SINGLE - SUPPLY APPLICATIONS

ACTIVER BANDPASS FILTER

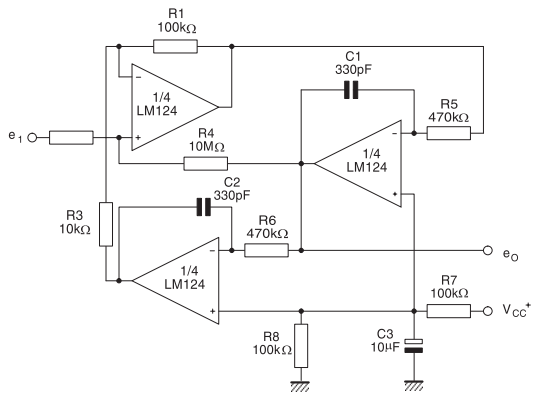

F_o = 1kHz

Q = 50

A_v = 100 (40dB)

HIGH INPUT Z, DC DIFFERENTIAL AMPLIFIER

For $\frac{R_1}{R_2} = \frac{R_4}{R_3}$

(CMRR depends on this resistor ratio match)

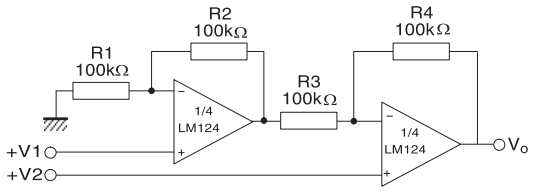

$e_0 \left(1 + \frac{R_4}{R_3}\right) (e_2 - e_1)$

As shown $e_0 = (e_2 - e_1)$

USING SYMETRICAL AMPLIFIERS TO REDUCE INPUT CURRENT (GENERAL CONCEPT)

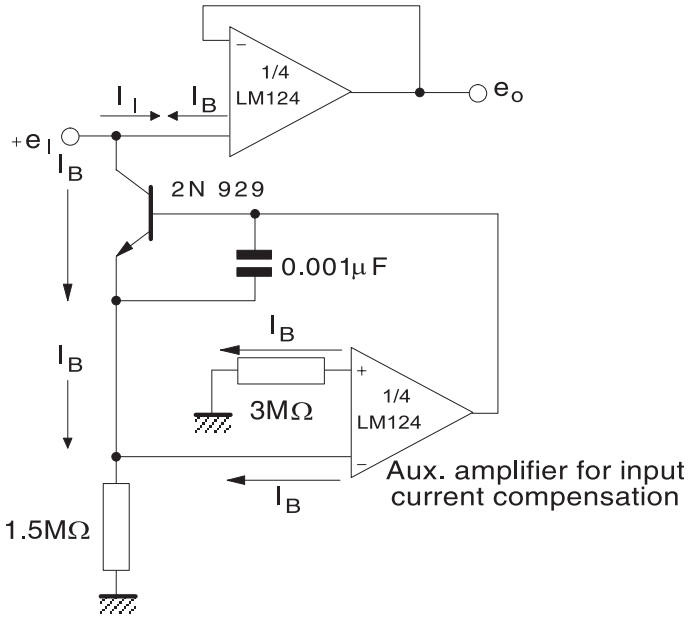

MACROMODEL
**** Standard Linear Ics Macromodels, 1993.**

```
** CONNECTIONS :
* 1 INVERTING INPUT
* 2 NON-INVERTING INPUT
* 3 OUTPUT
* 4 POSITIVE POWER SUPPLY
* 5 NEGATIVE POWER SUPPLY

.SUBCKT LM124 1 3 2 4 5 (analog)
*******************************************************
.MODEL MDTH D IS=1E-8 KF=3.104131E-15 CJO=10F
* INPUT STAGE
CIP 2 5 1.000000E-12
CIN 1 5 1.000000E-12
EIP 10 5 2 5 1
EIN 16 5 1 5 1
RIP 10 11 2.600000E+01
RIN 15 16 2.600000E+01
RIS 11 15 2.003862E+02
DIP 11 12 MDTH 400E-12
DIN 15 14 MDTH 400E-12
VOFP 12 13 DC 0
VOFN 13 14 DC 0
IPOL 13 5 1.000000E-05
CPS 11 15 3.783376E-09
DINN 17 13 MDTH 400E-12
VIN 17 5 0.000000e+00
DINR 15 18 MDTH 400E-12
VIP 4 18 2.000000E+00
FCP 4 5 VOFP 3.400000E+01
FCN 5 4 VOFN 3.400000E+01
FIBP 2 5 VOFN 2.000000E-03
FIBN 5 1 VOFP 2.000000E-03
* AMPLIFYING STAGE
FIP 5 19 VOFP 3.600000E+02
FIN 5 19 VOFN 3.600000E+02
RG1 19 5 3.652997E+06
RG2 19 4 3.652997E+06
CC 19 5 6.000000E-09
DOPM 19 22 MDTH 400E-12
DONM 21 19 MDTH 400E-12
HOPM 22 28 VOUT 7.500000E+03
VIPM 28 4 1.500000E+02
HONM 21 27 VOUT 7.500000E+03
VINM 5 27 1.500000E+02
EOUT 26 23 19 5 1
VOUT 23 5 0
ROUT 26 3 20
COUT 3 5 1.000000E-12
DOP 19 25 MDTH 400E-12
VOP 4 25 2.242230E+00
DON 24 19 MDTH 400E-12
VON 24 5 7.922301E-01
.ENDS
```

ELECTRICAL CHARACTERISTICS
V_{cc}^{+} = +15V, V_{cc}^{-} = 0V, T_{amb} = 25°C (unless otherwise specified)

Symbol	Conditions	Value	Unit
V_{io}		0	mV
A_{vd}	R_L = 2kΩ	100	V/mV
I_{cc}	No load, per amplifier	350	µA
V_{icm}		-15 to +13.5	V
V_{OH}	R_L = 2kΩ (V_{CC}^{+}=15V)	+13.5	V
V_{OL}	R_L = 10kΩ	5	mV
I_{os}	V_o = +2V, V_{CC} = +15V	+40	mA
GBP	R_L = 2kΩ, C_L = 100pF	1.3	MHz
SR	R_L = 2kΩ, C_L = 100pF	0.4	V/µs

PACKAGE MECHANICAL DATA

Plastic DIP-14 MECHANICAL DATA

DIM.	mm.			inch		
	MIN.	TYP	MAX.	MIN.	TYP.	MAX.
a1	0.51			0.020		
B	1.39		1.65	0.055		0.065
b		0.5			0.020	
b1		0.25			0.010	
D			20			0.787
E		8.5			0.335	
e		2.54			0.100	
e3		15.24			0.600	
F			7.1			0.280
I			5.1			0.201
L		3.3			0.130	
Z	1.27		2.54	0.050		0.100

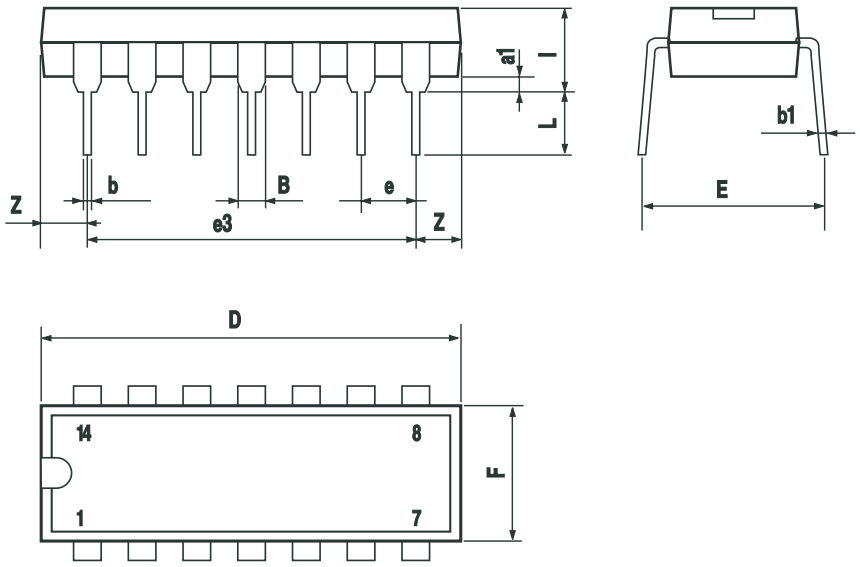

P001A

PACKAGE MECHANICAL DATA

SO-14 MECHANICAL DATA

DIM.	mm.			inch		
	MIN.	TYP	MAX.	MIN.	TYP.	MAX.
A			1.75			0.068
a1	0.1		0.2	0.003		0.007
a2			1.65			0.064
b	0.35		0.46	0.013		0.018
b1	0.19		0.25	0.007		0.010
C		0.5			0.019	
c1	45° (typ.)					
D	8.55		8.75	0.336		0.344
E	5.8		6.2	0.228		0.244
e		1.27			0.050	
e3		7.62			0.300	
F	3.8		4.0	0.149		0.157
G	4.6		5.3	0.181		0.208
L	0.5		1.27	0.019		0.050
M			0.68			0.026
S	8° (max.)					

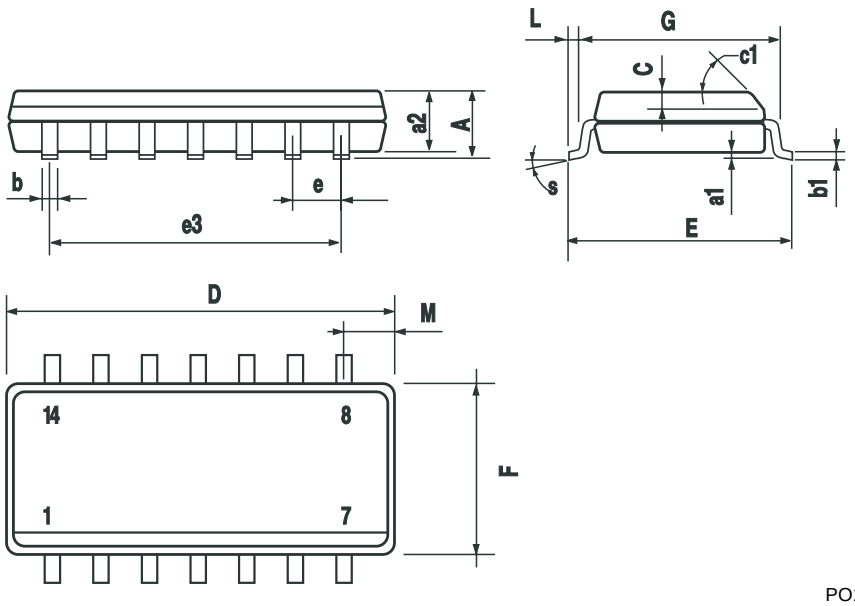

PO13G

PACKAGE MECHANICAL DATA

TSSOP14 MECHANICAL DATA

DIM.	mm.			inch		
	MIN.	TYP	MAX.	MIN.	TYP.	MAX.
A			1.2			0.047
A1	0.05		0.15	0.002	0.004	0.006
A2	0.8	1	1.05	0.031	0.039	0.041
b	0.19		0.30	0.007		0.012
c	0.09		0.20	0.004		0.0089
D	4.9	5	5.1	0.193	0.197	0.201
E	6.2	6.4	6.6	0.244	0.252	0.260
E1	4.3	4.4	4.48	0.169	0.173	0.176
e		0.65 BSC			0.0256 BSC	
K	0°		8°	0°		8°
L	0.45	0.60	0.75	0.018	0.024	0.030

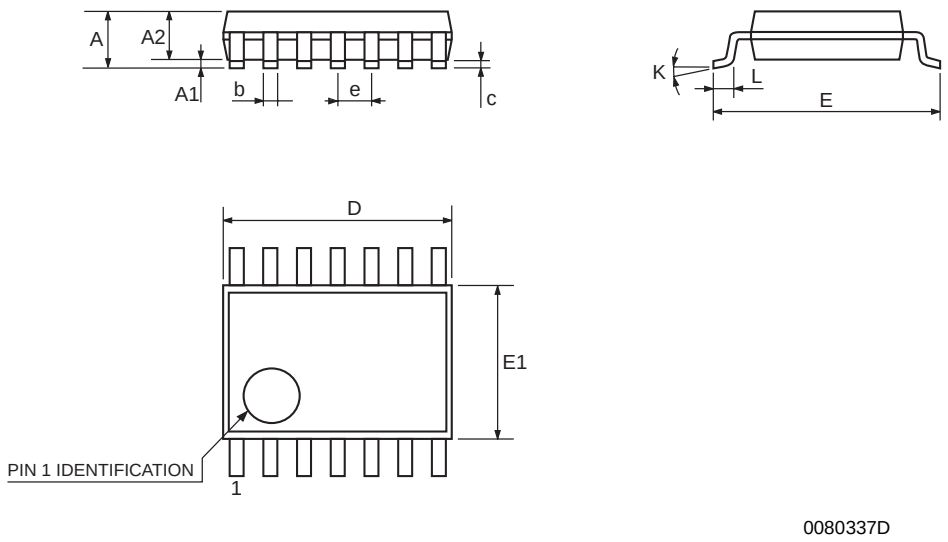

Information furnished is believed to be accurate and reliable. However, STMicroelectronics assumes no responsibility for the consequences of use of such information nor for any infringement of patents or other rights of third parties which may result from its use. No license is granted by implication or otherwise under any patent or patent rights of STMicroelectronics. Specifications mentioned in this publication are subject to change without notice. This publication supersedes and replaces all information previously supplied. STMicroelectronics products are not authorized for use as critical components in life support devices or systems without express written approval of STMicroelectronics.

The ST logo is a registered trademark of STMicroelectronics

© 2003 STMicroelectronics - All Rights Reserved
STMicroelectronics GROUP OF COMPANIES
Australia - Brazil - China - Finland - France - Germany - Hong Kong - India - Italy - Japan - Malaysia - Malta - Morocco
Singapore - Spain - Sweden - Switzerland - United Kingdom
http://www.st.com