# M74HC158

## QUAD 2 CHANNEL MULTIPLEXER (INV.)

- HIGH SPEED:
  $t_{PD}$ = 14ns (TYP.) at $V_{CC}$ = 6V
- LOW POWER DISSIPATION:
  $I_{CC}$ = 4µA(MAX.) at $T_A$=25°C
- HIGH NOISE IMMUNITY:
  $V_{NIH} = V_{NIL}$ = 28 % $V_{CC}$ (MIN.)
- SYMMETRICAL OUTPUT IMPEDANCE:
  $|I_{OH}| = I_{OL}$ = 4mA (MIN)
- BALANCED PROPAGATION DELAYS:
  $t_{PLH} \cong t_{PHL}$
- OUTPUTS DRIVE CAPABILITY
  10 LSTTL LOADS
- WIDE OPERATING VOLTAGE RANGE:
  $V_{CC}$ (OPR) = 2V to 6V
- PIN AND FUNCTION COMPATIBLE WITH
  74 SERIES 158

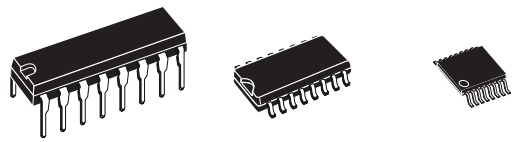

DIP SOP TSSOP

### ORDER CODES

| PACKAGE | TUBE | T & R |
|---|---|---|
| DIP | M74HC158B1R | |
| SOP | M74HC158M1R | M74HC158RM13TR |
| TSSOP | | M74HC158TTR |

### DESCRIPTION

The M74HC158 is an high speed CMOS QUAD 2 CHANNEL MULTIPLEXER fabricated with silicon gate $C^2$MOS technology.
These device consist of four 2-input digital multiplexer with common select and strobe inputs. The M74HC158 is an inverting multpilexer.

When the $\overline{\text{STROBE}}$ input is held high, selection of data is inhibited and all the outputs become high. The SELECT decoding determines whether the A or B inputs get routed to their corresponding Y outputs.
All inputs are equipped with protection circuits against static discharge and transient excess voltage.

### PIN CONNECTION AND IEC LOGIC SYMBOLS

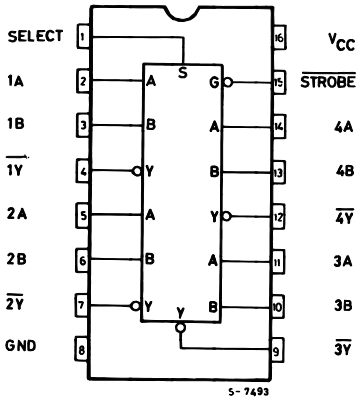


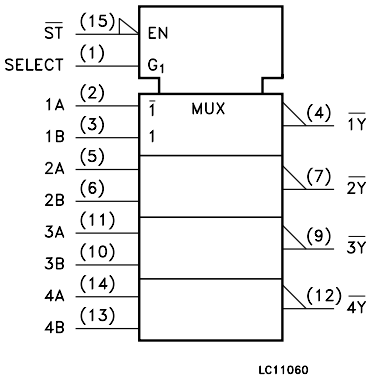

## INPUT AND OUTPUT EQUIVALENT CIRCUIT

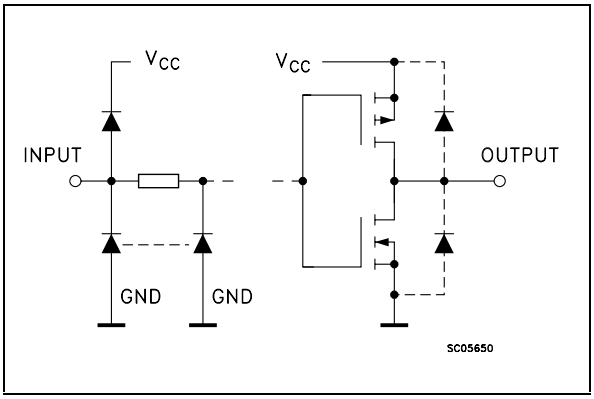


## PIN DESCRIPTION

| PIN No | SYMBOL | NAME AND FUNCTION |
|---|---|---|
| 1 | SELECT | Common Data Select Input |
| 2, 5, 11, 14 | 1A to 4A | Data Inputs From Source A |
| 3, 6, 10, 13 | 1B to 4B | Data Inputs From Source B |
| 4, 7, 9, 12 | $\overline{1Y}$ to $\overline{4Y}$ | Multiplexer Output |
| 15 | $\overline{STROBE}$ | Strobe Inputs |
| 8 | GND | Ground (0V) |
| 16 | $V_{CC}$ | Positive Supply Voltage |

## TRUTH TABLE

| INPUTS | | | | OUTPUTS |
|---|---|---|---|---|
| $\overline{STROBE}$ | SELECT | A | B | Y |
| H | X | X | X | H |
| L | L | L | X | H |
| L | L | H | X | L |
| L | H | X | L | H |
| L | H | X | H | L |

X : Don't Care

## LOGIC DIAGRAM

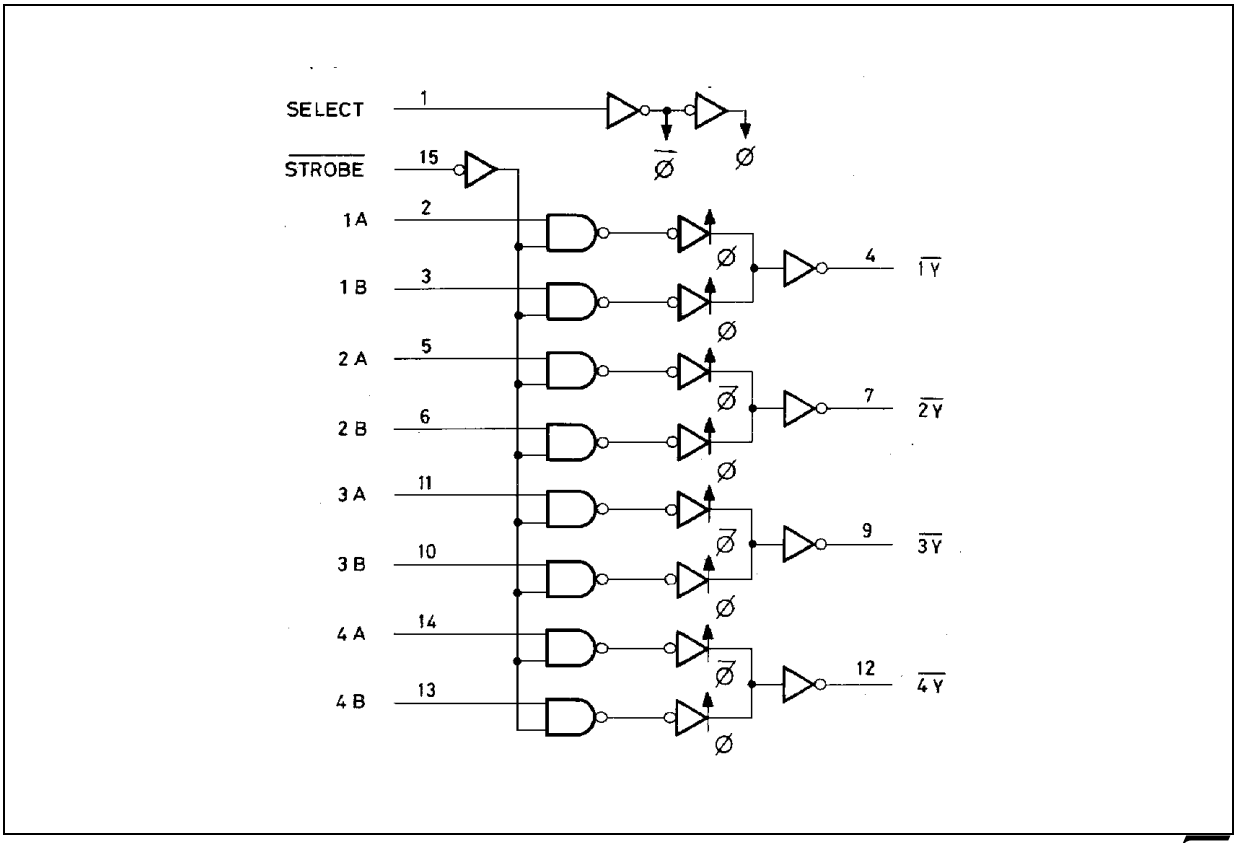

## ABSOLUTE MAXIMUM RATINGS

| Symbol | Parameter | Value | Unit |
|---|---|---|---|
| $V_{CC}$ | Supply Voltage | -0.5 to +7 | V |
| $V_I$ | DC Input Voltage | -0.5 to $V_{CC}$ + 0.5 | V |
| $V_O$ | DC Output Voltage | -0.5 to $V_{CC}$ + 0.5 | V |
| $I_{IK}$ | DC Input Diode Current | ± 20 | mA |
| $I_{OK}$ | DC Output Diode Current | ± 20 | mA |
| $I_O$ | DC Output Current | ± 25 | mA |
| $I_{CC}$ or $I_{GND}$ | DC $V_{CC}$ or Ground Current | ± 50 | mA |
| $P_D$ | Power Dissipation | 500(*) | mW |
| $T_{stg}$ | Storage Temperature | -65 to +150 | °C |
| $T_L$ | Lead Temperature (10 sec) | 300 | °C |

Absolute Maximum Ratings are those values beyond which damage to the device may occur. Functional operation under these conditions is not implied
(*) 500mW at 65 °C; derate to 300mW by 10mW/°C from 65°C to 85°C

## RECOMMENDED OPERATING CONDITIONS

| Symbol | Parameter | | Value | Unit |
|---|---|---|---|---|
| $V_{CC}$ | Supply Voltage | | 2 to 6 | V |
| $V_I$ | Input Voltage | | 0 to $V_{CC}$ | V |
| $V_O$ | Output Voltage | | 0 to $V_{CC}$ | V |
| $T_{op}$ | Operating Temperature | | -55 to 125 | °C |
| $t_r$, $t_f$ | Input Rise and Fall Time | $V_{CC}$ = 2.0V | 0 to 1000 | ns |
| | | $V_{CC}$ = 4.5V | 0 to 500 | ns |
| | | $V_{CC}$ = 6.0V | 0 to 400 | ns |

## DC SPECIFICATIONS

| Symbol | Parameter | Test Condition | | Value | | | | | | | Unit |
|---|---|---|---|---|---|---|---|---|---|---|---|
| | | $V_{CC}$ (V) | | $T_A$ = 25°C | | | -40 to 85°C | | -55 to 125°C | | |
| | | | | Min. | Typ. | Max. | Min. | Max. | Min. | Max. | |
| $V_{IH}$ | High Level Input Voltage | 2.0 | | 1.5 | | | 1.5 | | 1.5 | | V |
| | | 4.5 | | 3.15 | | | 3.15 | | 3.15 | | |
| | | 6.0 | | 4.2 | | | 4.2 | | 4.2 | | |
| $V_{IL}$ | Low Level Input Voltage | 2.0 | | | | 0.5 | | 0.5 | | 0.5 | V |
| | | 4.5 | | | | 1.35 | | 1.35 | | 1.35 | |
| | | 6.0 | | | | 1.8 | | 1.8 | | 1.8 | |
| $V_{OH}$ | High Level Output Voltage | 2.0 | $I_O$=-20 µA | 1.9 | 2.0 | | 1.9 | | 1.9 | | V |
| | | 4.5 | $I_O$=-20 µA | 4.4 | 4.5 | | 4.4 | | 4.4 | | |
| | | 6.0 | $I_O$=-20 µA | 5.9 | 6.0 | | 5.9 | | 5.9 | | |
| | | 4.5 | $I_O$=-4.0 mA | 4.18 | 4.31 | | 4.13 | | 4.10 | | |
| | | 6.0 | $I_O$=-5.2 mA | 5.68 | 5.8 | | 5.63 | | 5.60 | | |
| $V_{OL}$ | Low Level Output Voltage | 2.0 | $I_O$=20 µA | | 0.0 | 0.1 | | 0.1 | | 0.1 | V |
| | | 4.5 | $I_O$=20 µA | | 0.0 | 0.1 | | 0.1 | | 0.1 | |
| | | 6.0 | $I_O$=20 µA | | 0.0 | 0.1 | | 0.1 | | 0.1 | |
| | | 4.5 | $I_O$=4.0 mA | | 0.17 | 0.26 | | 0.33 | | 0.40 | |
| | | 6.0 | $I_O$=5.2 mA | | 0.18 | 0.26 | | 0.33 | | 0.40 | |
| $I_I$ * | Input Leakage Current | 6.0 | $V_I$ = $V_{CC}$ or GND | | | ± 0.1 | | ± 1 | | ± 1 | µA |
| $I_{CC}$ | Quiescent Supply Current | 6.0 | $V_I$ = $V_{CC}$ or GND | | | 4 | | 40 | | 80 | µA |

* : Applicable only to DIR, G, $\overline{G}$ input

## AC ELECTRICAL CHARACTERISTICS ($C_L$ = 50 pF, Input $t_r$ = $t_f$ = 6ns)

| Symbol | Parameter | Test Condition | | Value | | | | | | | Unit |
|---|---|---|---|---|---|---|---|---|---|---|---|
| | | $V_{CC}$ (V) | | $T_A$ = 25°C | | | -40 to 85°C | | -55 to 125°C | | |
| | | | | Min. | Typ. | Max. | Min. | Max. | Min. | Max. | |
| $t_{TLH}$ $t_{THL}$ | Output Transition Time | 2.0 | | | 30 | 75 | | 95 | | 110 | ns |
| | | 4.5 | | | 8 | 15 | | 19 | | 22 | |
| | | 6.0 | | | 7 | 13 | | 16 | | 19 | |
| $t_{PLH}$ $t_{PHL}$ | Propagation Delay Time (A, B - Y) | 2.0 | | | 30 | 100 | | 125 | | 150 | ns |
| | | 4.5 | | | 12 | 20 | | 25 | | 30 | |
| | | 6.0 | | | 10 | 17 | | 21 | | 26 | |
| $t_{PLH}$ $t_{PHL}$ | Propagation Delay Time (SELECT - Y) | 2.0 | | | 50 | 125 | | 155 | | 190 | ns |
| | | 4.5 | | | 16 | 25 | | 31 | | 38 | |
| | | 6.0 | | | 14 | 21 | | 26 | | 32 | |
| $t_{PLH}$ $t_{PHL}$ | Propagation Delay Time (STROBE -Y) | 2.0 | | | 36 | 115 | | 145 | | 175 | ns |
| | | 4.5 | | | 12 | 23 | | 29 | | 35 | |
| | | 6.0 | | | 10 | 20 | | 25 | | 30 | |

## CAPACITIVE CHARACTERISTICS

| Symbol | Parameter | Test Condition | | Value | | | | | | | Unit |
|---|---|---|---|---|---|---|---|---|---|---|---|
| | | $V_{CC}$ (V) | | $T_A$ = 25°C | | | -40 to 85°C | | -55 to 125°C | | |
| | | | | Min. | Typ. | Max. | Min. | Max. | Min. | Max. | |
| $C_{IN}$ | Input Capacitance | 5.0 | | | 5 | 10 | | 10 | | 10 | pF |
| $C_{PD}$ | Power Dissipation Capacitance (note 1) | 5.0 | | | 47 | | | | | | pF |

1) $C_{PD}$ is defined as the value of the IC's internal equivalent capacitance which is calculated from the operating current consumption without load. (Refer to Test Circuit). Average operating current can be obtained by the following equation. $I_{CC(opr)} = C_{PD} \times V_{CC} \times f_{IN} + I_{CC}/4$(per channel)

## TEST CIRCUIT

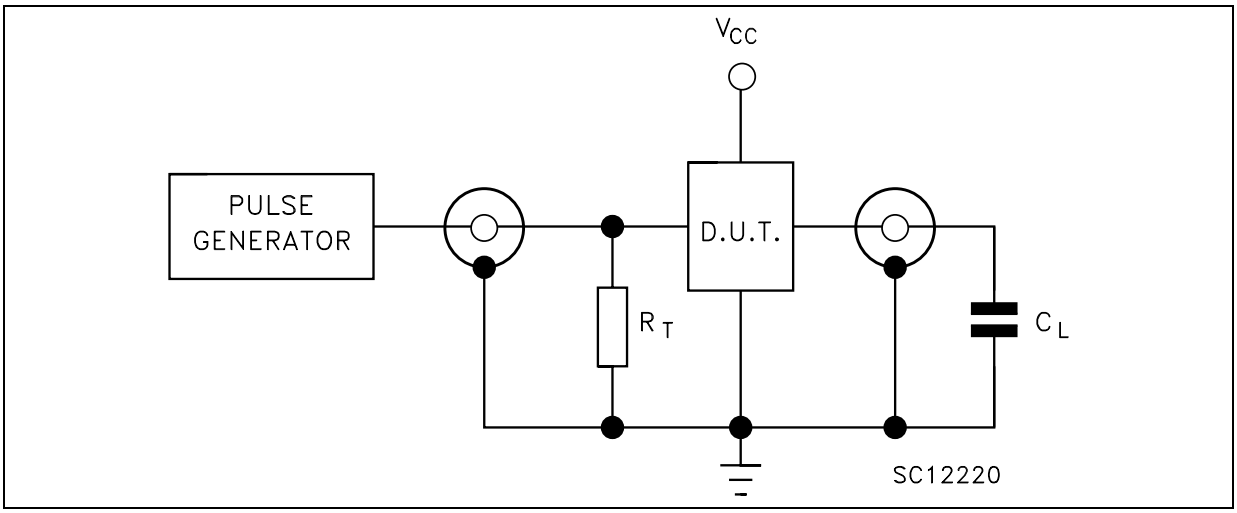


$C_L$ = 50pF or equivalent (includes jig and probe capacitance)
$R_T$ = $Z_{OUT}$ of pulse generator (typically 50Ω)

**WAVEFORM : PROPAGATION DELAY TIMES** (f=1MHz; 50% duty cycle)

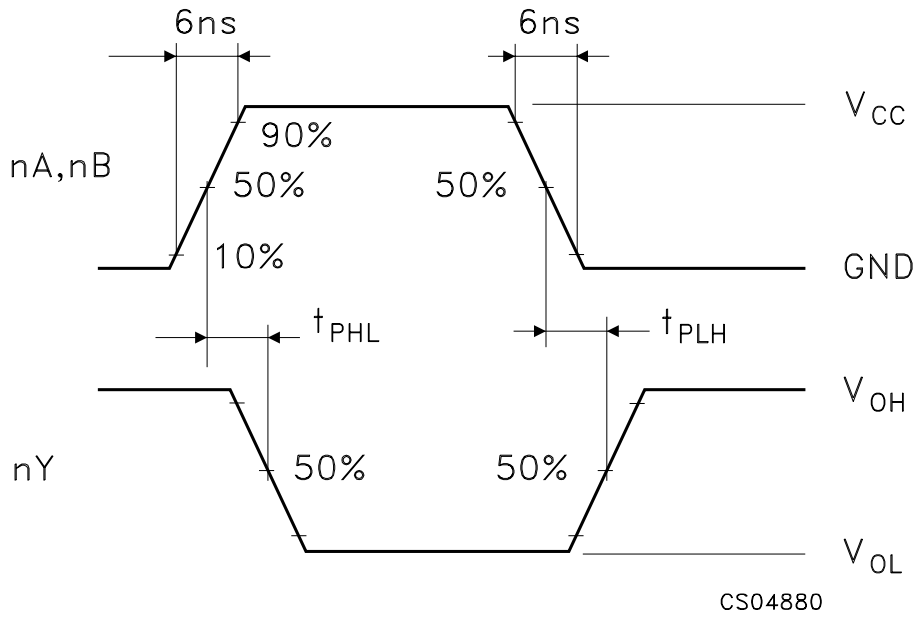

## Plastic DIP-16 (0.25) MECHANICAL DATA

| DIM. | mm. | | | inch | | |
|---|---|---|---|---|---|---|
| | MIN. | TYP | MAX. | MIN. | TYP. | MAX. |
| a1 | 0.51 | | | 0.020 | | |
| B | 0.77 | | 1.65 | 0.030 | | 0.065 |
| b | | 0.5 | | | 0.020 | |
| b1 | | 0.25 | | | 0.010 | |
| D | | | 20 | | | 0.787 |
| E | | 8.5 | | | 0.335 | |
| e | | 2.54 | | | 0.100 | |
| e3 | | 17.78 | | | 0.700 | |
| F | | | 7.1 | | | 0.280 |
| I | | | 5.1 | | | 0.201 |
| L | | 3.3 | | | 0.130 | |
| Z | | | 1.27 | | | 0.050 |

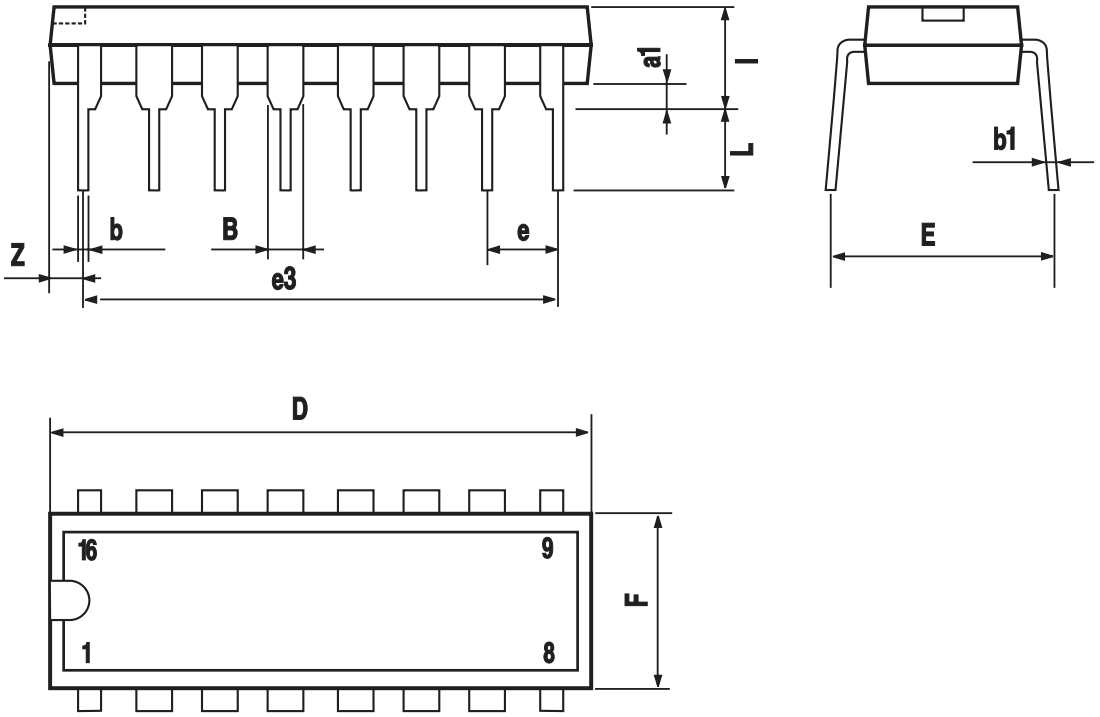


P001C

## SO-16 MECHANICAL DATA

| DIM. | mm. | | | inch | | |
|---|---|---|---|---|---|---|
| | MIN. | TYP | MAX. | MIN. | TYP. | MAX. |
| A | | | 1.75 | | | 0.068 |
| a1 | 0.1 | | 0.2 | 0.003 | | 0.007 |
| a2 | | | 1.65 | | | 0.064 |
| b | 0.35 | | 0.46 | 0.013 | | 0.018 |
| b1 | 0.19 | | 0.25 | 0.007 | | 0.010 |
| C | | 0.5 | | | 0.019 | |
| c1 | 45° (typ.) | | | | | |
| D | 9.8 | | 10 | 0.385 | | 0.393 |
| E | 5.8 | | 6.2 | 0.228 | | 0.244 |
| e | | 1.27 | | | 0.050 | |
| e3 | | 8.89 | | | 0.350 | |
| F | 3.8 | | 4.0 | 0.149 | | 0.157 |
| G | 4.6 | | 5.3 | 0.181 | | 0.208 |
| L | 0.5 | | 1.27 | 0.019 | | 0.050 |
| M | | | 0.62 | | | 0.024 |
| S | 8° (max.) | | | | | |

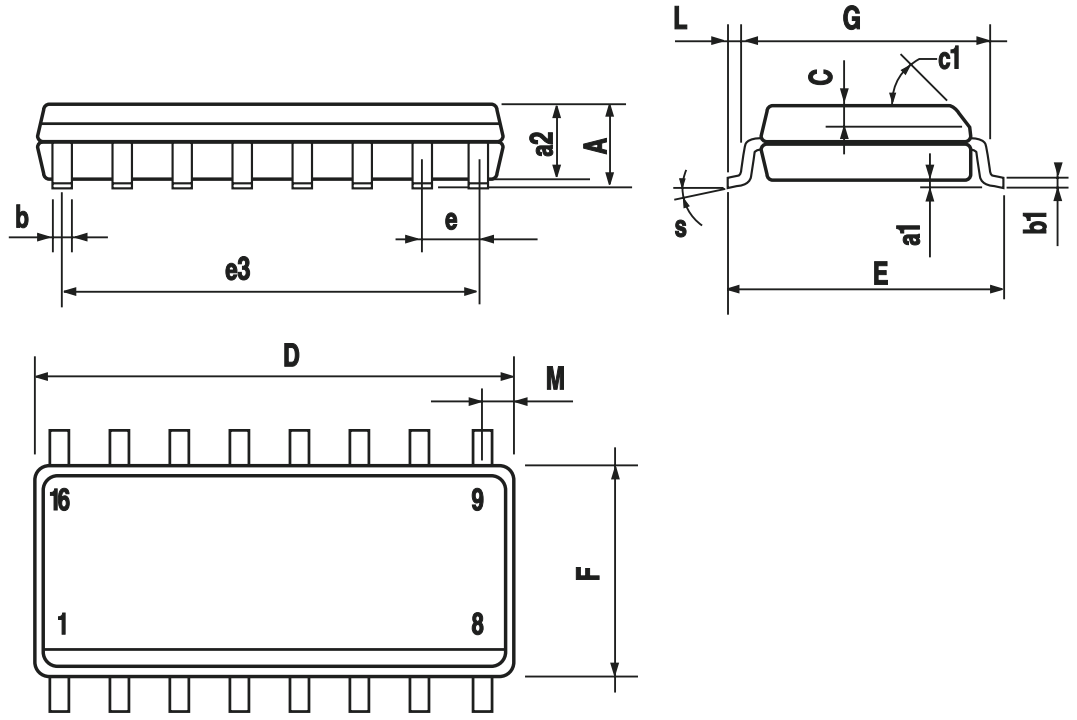


PO13H

# TSSOP16 MECHANICAL DATA

| DIM. | mm. | | | inch | | |
|---|---|---|---|---|---|---|
| | MIN. | TYP | MAX. | MIN. | TYP. | MAX. |
| A | | | 1.2 | | | 0.047 |
| A1 | 0.05 | | 0.15 | 0.002 | 0.004 | 0.006 |
| A2 | 0.8 | 1 | 1.05 | 0.031 | 0.039 | 0.041 |
| b | 0.19 | | 0.30 | 0.007 | | 0.012 |
| c | 0.09 | | 0.20 | 0.004 | | 0.0089 |
| D | 4.9 | 5 | 5.1 | 0.193 | 0.197 | 0.201 |
| E | 6.2 | 6.4 | 6.6 | 0.244 | 0.252 | 0.260 |
| E1 | 4.3 | 4.4 | 4.48 | 0.169 | 0.173 | 0.176 |
| e | | 0.65 BSC | | | 0.0256 BSC | |
| K | 0° | | 8° | 0° | | 8° |
| L | 0.45 | 0.60 | 0.75 | 0.018 | 0.024 | 0.030 |

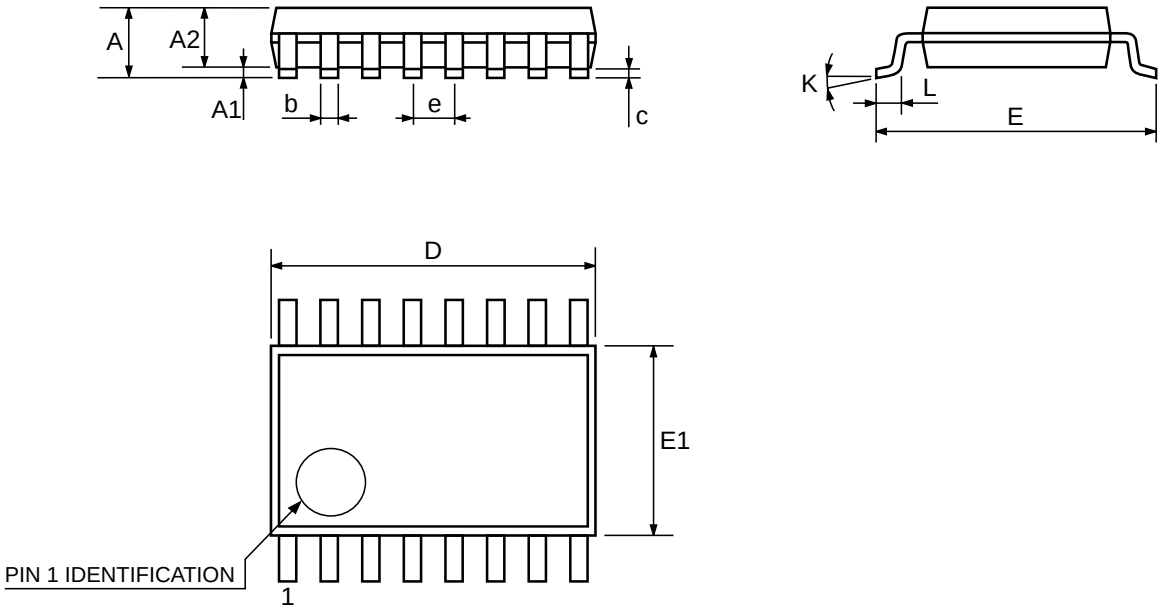


0080338D

**Information furnished is believed to be accurate and reliable. However, STMicroelectronics assumes no responsibility for the consequences of use of such information nor for any infringement of patents or other rights of third parties which may result from its use. No license is granted by implication or otherwise under any patent or patent rights of STMicroelectronics. Specifications mentioned in this publication are subject to change without notice. This publication supersedes and replaces all information previously supplied. STMicroelectronics products are not authorized for use as critical components in life support devices or systems without express written approval of STMicroelectronics.**

**© The ST logo is a registered trademark of STMicroelectronics**

**© 2001 STMicroelectronics - Printed in Italy - All Rights Reserved**
**STMicroelectronics GROUP OF COMPANIES**
Australia - Brazil - China - Finland - France - Germany - Hong Kong - India - Italy - Japan - Malaysia - Malta - Morocco
Singapore - Spain - Sweden - Switzerland - United Kingdom
**© http://www.st.com**