M74HCT258

QUAD 2 CHANNEL MULTIPLEXER (3-STATE, INVERTING)

- HIGH SPEED :
  t_{PD} = 17 ns (TYP.) at V_{CC} = 4.5V
- LOW POWER DISSIPATION:
  I_{CC} =4µA(MAX.) at T_A=25°C
- COMPATIBLE WITH TTL OUTPUTS :
  V_{IH} = 2V (MIN.) V_{IL} = 0.8V (MAX)
- SYMMETRICAL OUTPUT IMPEDANCE:
  $|I_{OH}| = I_{OL}$ = 6mA (MIN)
- BALANCED PROPAGATION DELAYS:
  $t_{PLH} \cong t_{PHL}$
- PIN AND FUNCTION COMPATIBLE WITH 74 SERIES 258

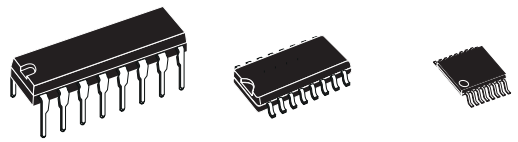

DIP SOP TSSOP

ORDER CODES

PACKAGE	TUBE	T & R
DIP	M74HCT258B1R	
SOP	M74HCT258M1R	M74HCT258RM13TR
TSSOP		M74HCT258TTR

DESCRIPTION

The M74HCT258 is an high speed CMOS QUAD 2 CHANNEL MULTIPLEXER (3-STATE) fabricated with silicon gate C^2MOS technology.
This IC is composed of an independent 2-channel multiplexer with common SELECT and ENABLE ($\overline{OE}$) input.
The M74HCT258 is an inverting multiplexer. When the ENABLE input is held "High", outputs of the IC become in a High-Impedance state. If SELECT input is held low, "A" data is selected, when SELECT is high , "B" data is chosen.
All inputs are equipped with protection circuits against static discharge and transient excess voltage.

PIN CONNECTION AND IEC LOGIC SYMBOLS

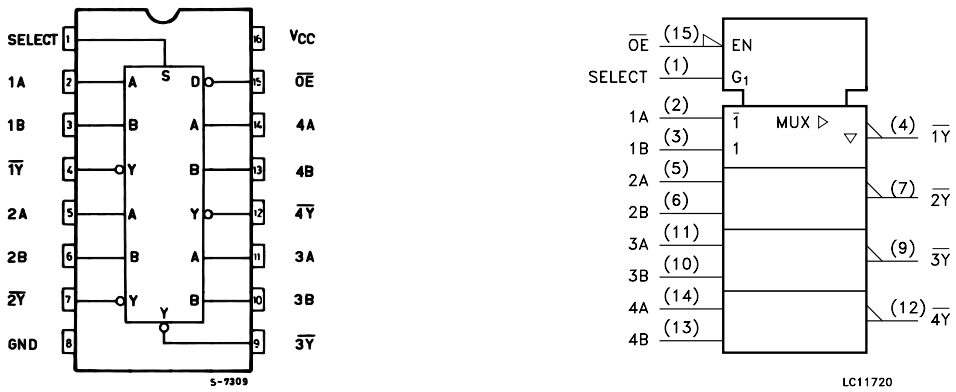

INPUT AND OUTPUT EQUIVALENT CIRCUIT

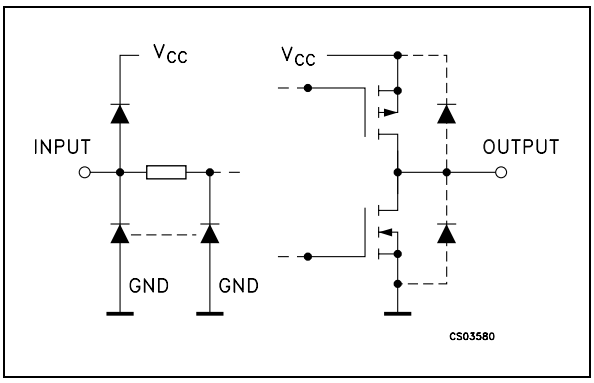

PIN DESCRIPTION

PIN No	SYMBOL	NAME AND FUNCTION
1	SELECT	Common Data Select Input
2, 5, 14, 11	1A to 4A	Data Input From Source A
3, 6, 13, 10	1B to 4B	Data Input From Source B
4, 7, 12, 9	$1\overline{Y}$ to $4\overline{Y}$	3 State Multiplexer Outputs
15	$\overline{OE}$	3 State Output Enable Inputs (Active Low)
8	GND	Ground (0V)
16	Vcc	Positive Supply Voltage

TRUTH TABLE

INPUTS				OUTPUT
$\overline{OE}$	SELECT	A	B	$\overline{Y}$
H	X	X	X	Z
L	L	L	X	H
L	L	H	X	L
L	H	X	L	H
L	H	X	H	L

X : Don't Care
Z : High Impedance

LOGIC DIAGRAM

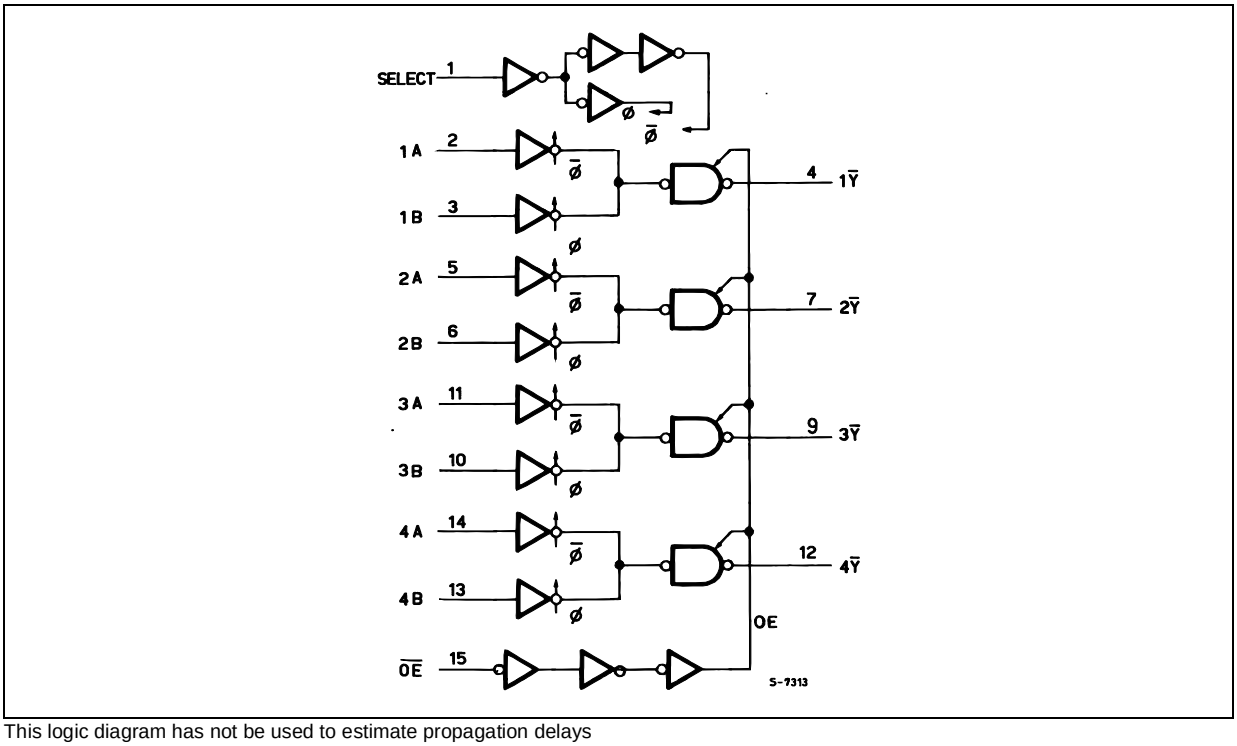

This logic diagram has not be used to estimate propagation delays

ABSOLUTE MAXIMUM RATINGS

Symbol	Parameter	Value	Unit
V_{CC}	Supply Voltage	-0.5 to +7	V
V_I	DC Input Voltage	-0.5 to V_{CC} + 0.5	V
V_O	DC Output Voltage	-0.5 to V_{CC} + 0.5	V
I_{IK}	DC Input Diode Current	± 20	mA
I_{OK}	DC Output Diode Current	± 20	mA
I_O	DC Output Current	± 35	mA
I_{CC} or I_{GND}	DC V_{CC} or Ground Current	± 70	mA
P_D	Power Dissipation	500(*)	mW
T_{stg}	Storage Temperature	-65 to +150	°C
T_L	Lead Temperature (10 sec)	300	°C

Absolute Maximum Ratings are those values beyond which damage to the device may occur. Functional operation under these conditions is not implied
(*) 500mW at 65 °C; derate to 300mW by 10mW/°C from 65°C to 85°C

RECOMMENDED OPERATING CONDITIONS

Symbol	Parameter	Value	Unit
V_{CC}	Supply Voltage	4.5 to 5.5	V
V_I	Input Voltage	0 to V_{CC}	V
V_O	Output Voltage	0 to V_{CC}	V
T_{op}	Operating Temperature	-55 to 125	°C
t_r, t_f	Input Rise and Fall Time (V_{CC} = 4.5 to 5.5V)	0 to 500	ns

DC SPECIFICATIONS

Symbol	Parameter	Test Condition		Value							Unit
		V_{CC} (V)		T_A = 25°C			-40 to 85°C		-55 to 125°C		
				Min.	Typ.	Max.	Min.	Max.	Min.	Max.	
V_{IH}	High Level Input Voltage	4.5 to 5.5		2.0			2.0		2.0		V
V_{IL}	Low Level Input Voltage	4.5 to 5.5				0.8		0.8		0.8	V
V_{OH}	High Level Output Voltage	4.5	I_O=-20 µA	4.4	4.5		4.4		4.4		V
			I_O=-6.0 mA	4.18	4.31		4.13		4.10		
V_{OL}	Low Level Output Voltage	4.5	I_O=20 µA		0.0	0.1		0.1		0.1	V
			I_O=6.0 mA		0.17	0.26		0.33		0.40	
I_I	Input Leakage Current	5.5	$V_I = V_{CC}$ or GND			± 0.1		± 1		± 1	µA
I_{OZ}	High Impedance Output Leakage Current	5.5	$V_I = V_{IH}$ or V_{IL} $V_O = V_{CC}$ or GND			± 0.5		± 5		± 10	µA
I_{CC}	Quiescent Supply Current	5.5	$V_I = V_{CC}$ or GND			4		40		80	µA
ΔI_{CC}	Additional Worst Case Supply Current	5.5	Per Input pin V_I = 0.5V or V_I = 2.4V Other Inputs at V_{CC} or GND I_O = 0			2.0		2.9		3.0	mA

AC ELECTRICAL CHARACTERISTICS (C_L = 50 pF, Input $t_r = t_f$ = 6ns)

Symbol	Parameter	Test Condition		Value							Unit
		V_{CC} (V)		T_A = 25°C			-40 to 85°C		-55 to 125°C		
				Min.	Typ.	Max.	Min.	Max.	Min.	Max.	
t_{TLH} t_{THL}	Output Transition Time	4.5			7	12		15		18	ns
t_{PLH} t_{PHL}	Propagation Delay Time (A, B - $\overline{Y}$)	4.5			17	27		34		41	ns
t_{PLH} t_{PHL}	Propagation Delay Time (SELECT - $\overline{Y}$)	4.5			13	20		25		30	ns
t_{PZL} t_{PZH}	High Impedance Output Enable Time	4.5	R_L = 1 KΩ		12	22		28		33	ns
t_{PLZ} t_{PHZ}	High Impedance Output Disable Time	4.5	R_L = 1 KΩ		14	28		35		42	ns

CAPACITIVE CHARACTERISTICS

Symbol	Parameter	Test Condition		Value							Unit
		V_{CC} (V)		T_A = 25°C			-40 to 85°C		-55 to 125°C		
				Min.	Typ.	Max.	Min.	Max.	Min.	Max.	
C_{IN}	Input Capacitance				5	10		10		10	pF
C_{OUT}	Output Capacitance				10						pF
C_{PD}	Power Dissipation Capacitance (note 1)				33						pF

1) C_{PD} is defined as the value of the IC's internal equivalent capacitance which is calculated from the operating current consumption without load. (Refer to Test Circuit). Average operating current can be obtained by the following equation. $I_{CC(opr)} = C_{PD} \times V_{CC} \times f_{IN} + I_{CC}/4$ (per Channel)

TEST CIRCUIT

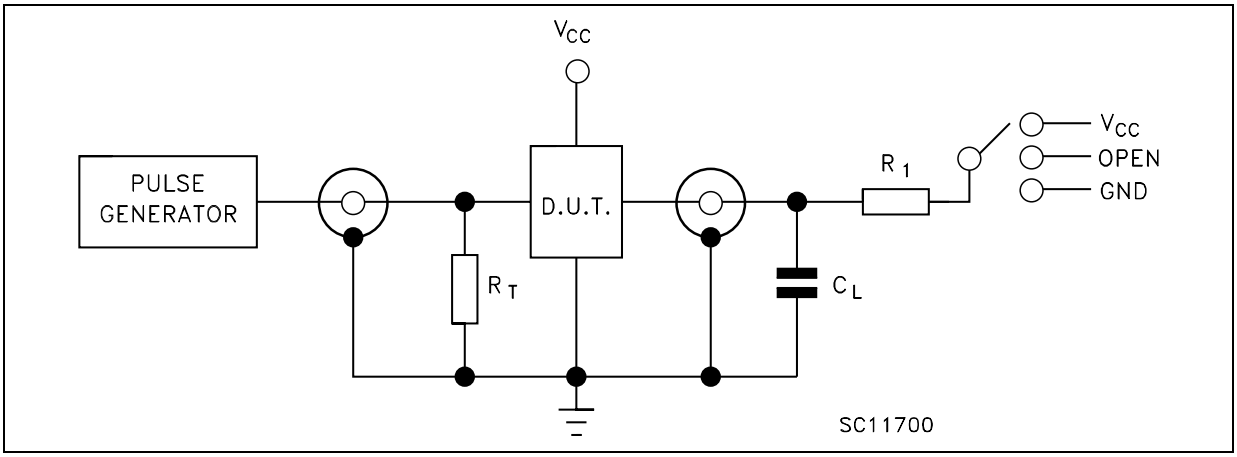

TEST	SWITCH
t_{PLH}, t_{PHL}	Open
t_{PZL}, t_{PLZ}	V_{CC}
t_{PZH}, t_{PHZ}	GND

C_L = 50pF/150pF or equivalent (includes jig and probe capacitance)
R_1 = 1KΩ or equivalent
R_T = Z_{OUT} of pulse generator (typically 50Ω)

WAVEFORM 1: PROPAGATION DELAY TIME (f=1MHz; 50% duty cycle)

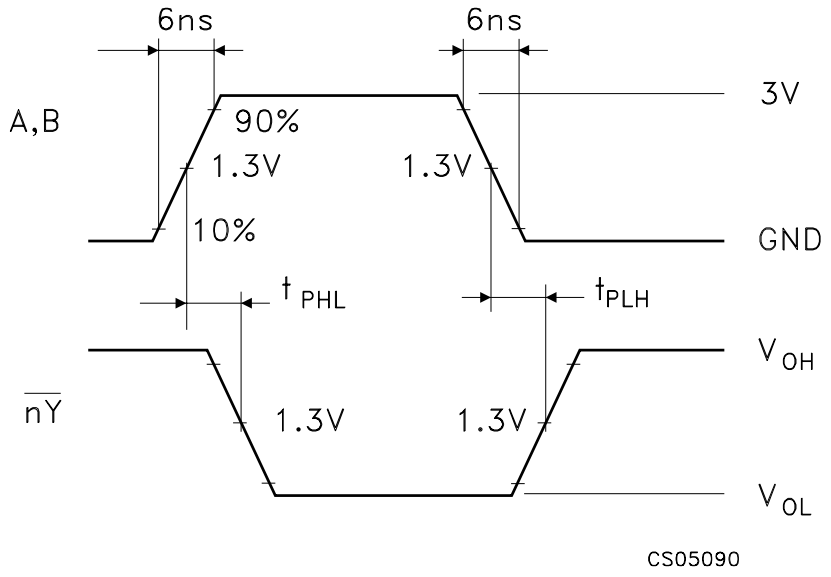

WAVEFORM 2 :OUTPUT ENABLE AND DISABLE TIME (f=1MHz; 50% duty cycle)

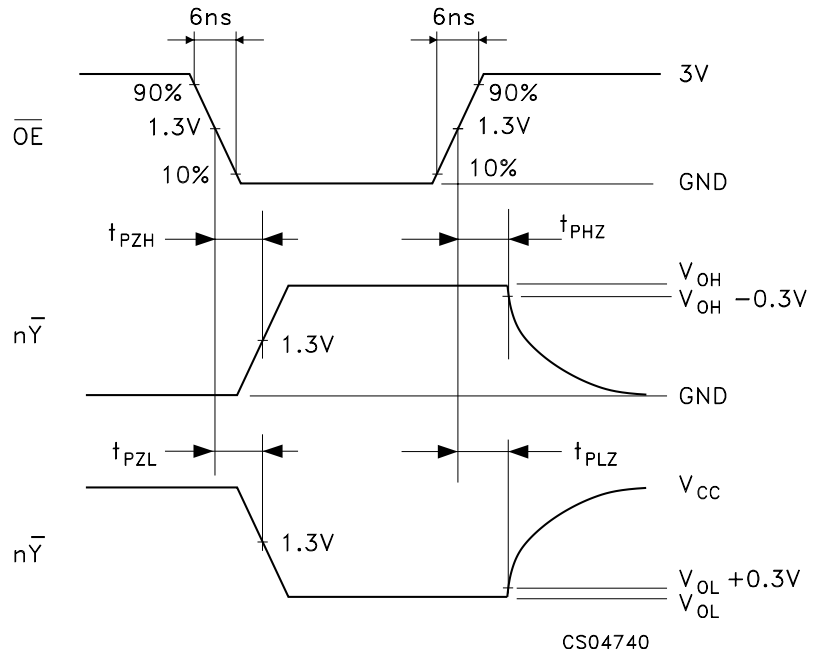

Plastic DIP-16 (0.25) MECHANICAL DATA

DIM.	mm.			inch		
	MIN.	TYP	MAX.	MIN.	TYP.	MAX.
a1	0.51			0.020		
B	0.77		1.65	0.030		0.065
b		0.5			0.020	
b1		0.25			0.010	
D			20			0.787
E		8.5			0.335	
e		2.54			0.100	
e3		17.78			0.700	
F			7.1			0.280
I			5.1			0.201
L		3.3			0.130	
Z			1.27			0.050

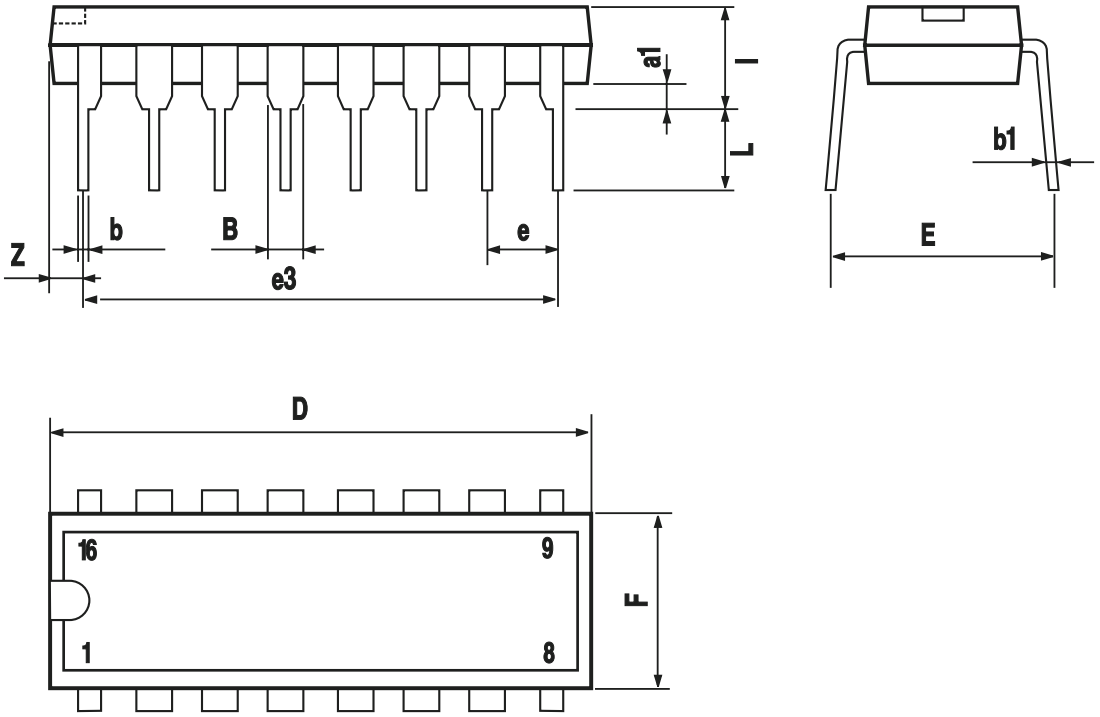

P001C

SO-16 MECHANICAL DATA

DIM.	mm.			inch		
	MIN.	TYP	MAX.	MIN.	TYP.	MAX.
A			1.75			0.068
a1	0.1		0.2	0.003		0.007
a2			1.65			0.064
b	0.35		0.46	0.013		0.018
b1	0.19		0.25	0.007		0.010
C		0.5			0.019	
c1	45° (typ.)					
D	9.8		10	0.385		0.393
E	5.8		6.2	0.228		0.244
e		1.27			0.050	
e3		8.89			0.350	
F	3.8		4.0	0.149		0.157
G	4.6		5.3	0.181		0.208
L	0.5		1.27	0.019		0.050
M			0.62			0.024
S	8° (max.)					

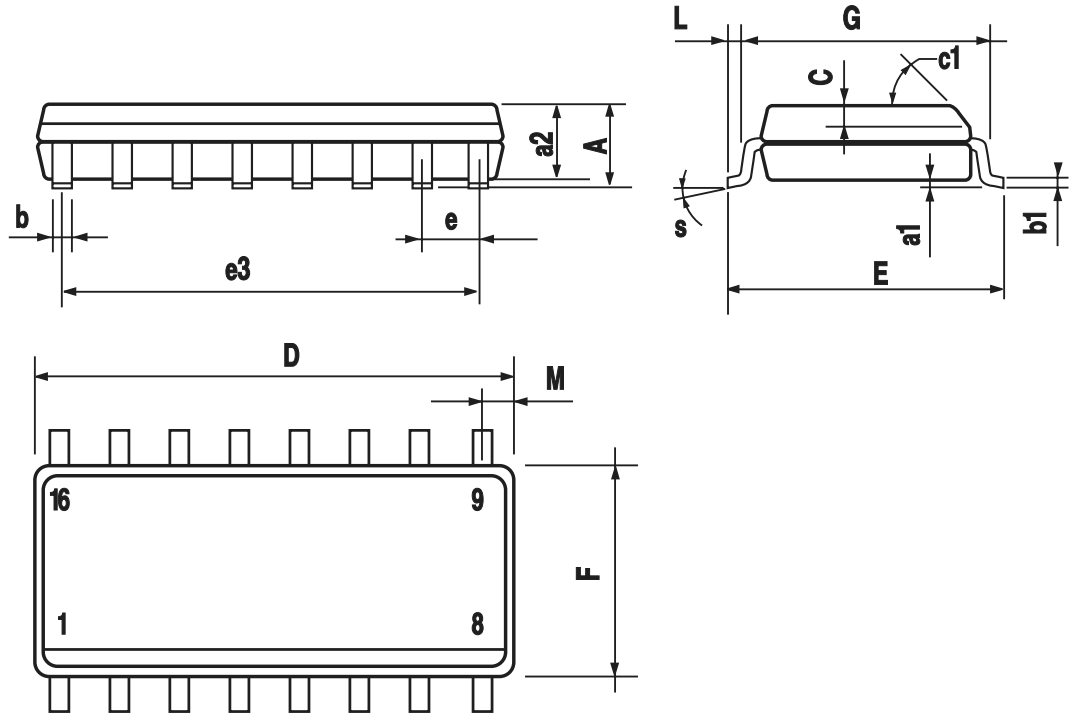

PO13H

TSSOP16 MECHANICAL DATA

DIM.	mm.			inch		
	MIN.	TYP	MAX.	MIN.	TYP.	MAX.
A			1.2			0.047
A1	0.05		0.15	0.002	0.004	0.006
A2	0.8	1	1.05	0.031	0.039	0.041
b	0.19		0.30	0.007		0.012
c	0.09		0.20	0.004		0.0089
D	4.9	5	5.1	0.193	0.197	0.201
E	6.2	6.4	6.6	0.244	0.252	0.260
E1	4.3	4.4	4.48	0.169	0.173	0.176
e		0.65 BSC			0.0256 BSC	
K	0°		8°	0°		8°
L	0.45	0.60	0.75	0.018	0.024	0.030

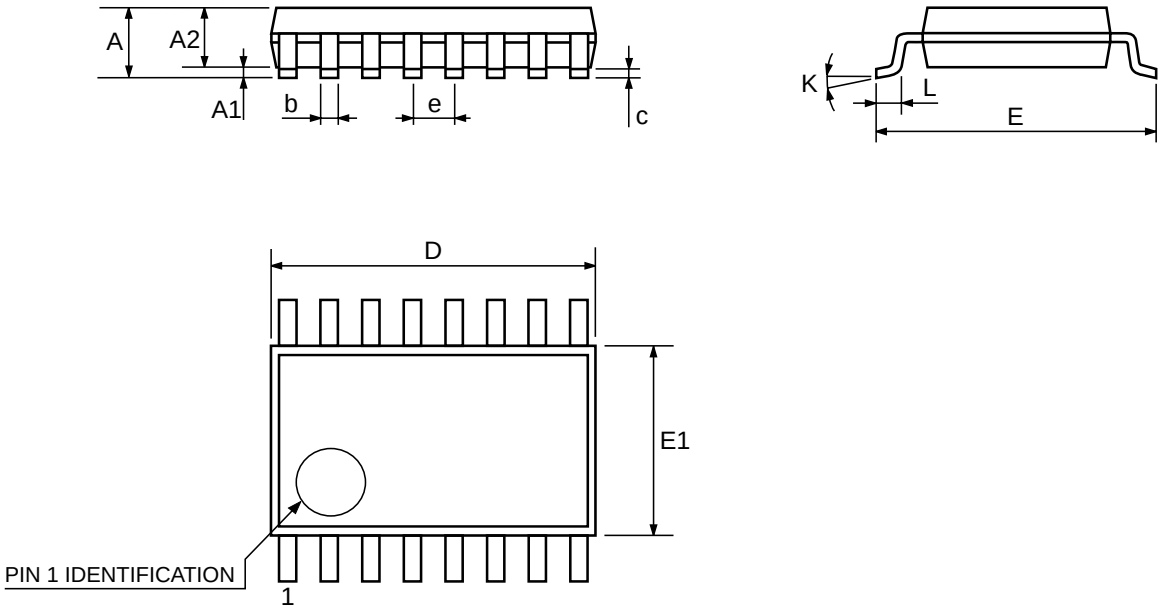

0080338D

Information furnished is believed to be accurate and reliable. However, STMicroelectronics assumes no responsibility for the consequences of use of such information nor for any infringement of patents or other rights of third parties which may result from its use. No license is granted by implication or otherwise under any patent or patent rights of STMicroelectronics. Specifications mentioned in this publication are subject to change without notice. This publication supersedes and replaces all information previously supplied. STMicroelectronics products are not authorized for use as critical components in life support devices or systems without express written approval of STMicroelectronics.

© The ST logo is a registered trademark of STMicroelectronics

© 2001 STMicroelectronics - Printed in Italy - All Rights Reserved
STMicroelectronics GROUP OF COMPANIES
Australia - Brazil - China - Finland - France - Germany - Hong Kong - India - Italy - Japan - Malaysia - Malta - Morocco
Singapore - Spain - Sweden - Switzerland - United Kingdom
© http://www.st.com