M74HCT368

HEX BUS BUFFER WITH 3 STATE OUTPUT INVERTING

- HIGH SPEED:
  t_{PD} = 15ns (TYP.) at V_{CC} = 4.5V
- LOW POWER DISSIPATION:
  I_{CC} = 4µA(MAX.) at T_A=25°C
- COMPATIBLE WITH TTL OUTPUTS :
  V_{IH} = 2V (MIN.) V_{IL} = 0.8V (MAX)
- SYMMETRICAL OUTPUT IMPEDANCE:
  $|I_{OH}| = I_{OL}$ = 6mA (MIN)
- BALANCED PROPAGATION DELAYS:
  $t_{PLH} \cong t_{PHL}$
- PIN AND FUNCTION COMPATIBLE WITH 74 SERIES 368

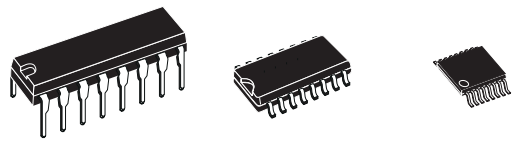

DIP SOP TSSOP

ORDER CODES

PACKAGE	TUBE	T & R
DIP	M74HCT368B1R	
SOP	M74HCT368M1R	M74HCT368RM13TR
TSSOP		M74HCT368TTR

DESCRIPTION

The M74HCT368 is an high speed CMOS HEX BUS BUFFER 3-STATE OUTPUTS fabricated with silicon gate C^2MOS technology.
This device contains six buffers, four buffers are controlled by an enable input ($\overline{G1}$) and the other two buffers are controlled by the other enable input ($\overline{G2}$); the outputs of each buffer group are enabled when $\overline{G1}$ and/or $\overline{G2}$ inputs are held low, and when held high, these outputs are disabled in a high-impedance state.
All inputs are equipped with protection circuits against static discharge and transient excess voltage.

PIN CONNECTION AND IEC LOGIC SYMBOLS

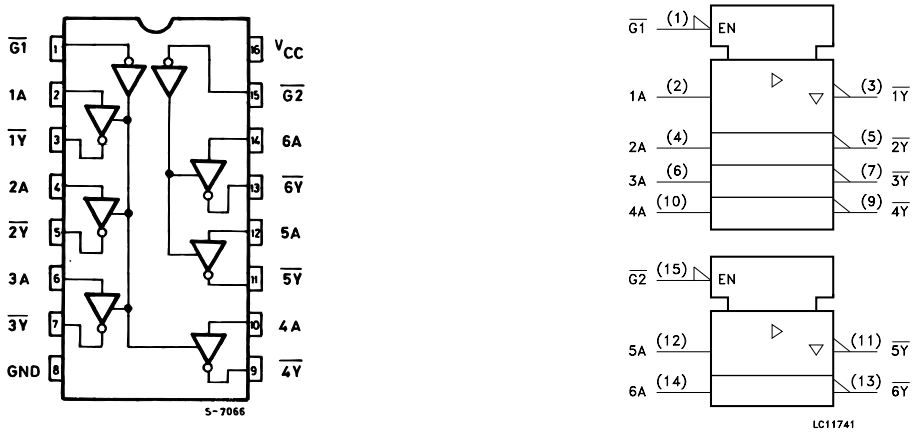

INPUT AND OUTPUT EQUIVALENT CIRCUIT

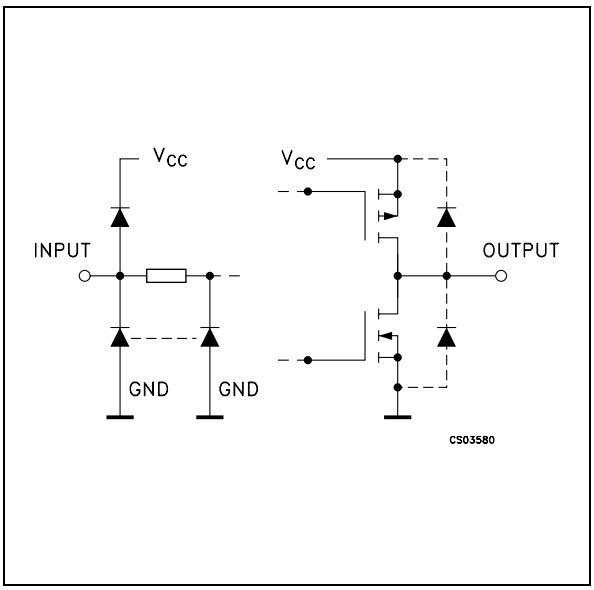

PIN DESCRIPTION

PIN No	SYMBOL	NAME AND FUNCTION
1, 15	$\overline{G1}$, $\overline{G2}$	3 State Output Enable Input
2, 4, 6, 10, 12, 14	1A to 6A	Data Inputs
3, 5, 7, 9, 11, 13	$1\overline{Y}$ to $6\overline{Y}$	Data Outputs
8	GND	Ground (0V)
16	V_{CC}	Positive Supply Voltage

TRUTH TABLE

INPUTS		OUTPUTS
$\overline{G}$	An	$\overline{Yn}$
L	L	H
L	H	L
H	X	Z

X: Don't Care
Z: High Impedance

ABSOLUTE MAXIMUM RATINGS

Symbol	Parameter	Value	Unit
V_{CC}	Supply Voltage	-0.5 to +7	V
V_I	DC Input Voltage	-0.5 to V_{CC} + 0.5	V
V_O	DC Output Voltage	-0.5 to V_{CC} + 0.5	V
I_{IK}	DC Input Diode Current	± 20	mA
I_{OK}	DC Output Diode Current	± 20	mA
I_O	DC Output Current	± 35	mA
I_{CC} or I_{GND}	DC V_{CC} or Ground Current	± 70	mA
P_D	Power Dissipation	500(*)	mW
T_{stg}	Storage Temperature	-65 to +150	°C
T_L	Lead Temperature (10 sec)	300	°C

Absolute Maximum Ratings are those values beyond which damage to the device may occur. Functional operation under these conditions is not implied
(*) 500mW at 65 °C; derate to 300mW by 10mW/°C from 65°C to 85°C

RECOMMENDED OPERATING CONDITIONS

Symbol	Parameter	Value	Unit
V_{CC}	Supply Voltage	4.5 to 5.5	V
V_I	Input Voltage	0 to V_{CC}	V
V_O	Output Voltage	0 to V_{CC}	V
T_{op}	Operating Temperature	-55 to 125	°C
t_r, t_f	Input Rise and Fall Time (V_{CC} = 4.5 to 5.5V)	0 to 500	ns

DC SPECIFICATIONS

Symbol	Parameter	Test Condition		Value							Unit
		V_{CC} (V)		T_A = 25°C			-40 to 85°C		-55 to 125°C		
				Min.	Typ.	Max.	Min.	Max.	Min.	Max.	
V_{IH}	High Level Input Voltage	4.5 to 5.5		2.0			2.0		2.0		V
V_{IL}	Low Level Input Voltage	4.5 to 5.5				0.8		0.8		0.8	V
V_{OH}	High Level Output Voltage	4.5	I_O=-20 µA	4.4	4.5		4.4		4.4		V
			I_O=-6.0 mA	4.18	4.31		4.13		4.10		
V_{OL}	Low Level Output Voltage	4.5	I_O=20 µA		0.0	0.1		0.1		0.1	V
			I_O=6.0 mA		0.17	0.26		0.33		0.40	
I_I	Input Leakage Current	5.5	$V_I = V_{CC}$ or GND			± 0.1		± 1		± 1	µA
I_{OZ}	High Impedance Output Leakage Current	5.5	$V_I = V_{IH}$ or V_{IL} $V_O = V_{CC}$ or GND			± 0.5		± 5		± 10	µA
I_{CC}	Quiescent Supply Current	5.5	$V_I = V_{CC}$ or GND			4		40		80	µA
ΔI_{CC}	Additional Worst Case Supply Current	5.5	Per Input pin V_I = 0.5V or V_I = 2.4V Other Inputs at V_{CC} or GND I_O = 0			2.0		2.9		3.0	mA

AC ELECTRICAL CHARACTERISTICS (C_L = 50 pF, Input $t_r = t_f$ = 6ns)

Symbol	Parameter	Test Condition			Value							Unit
		V_{CC} (V)	C_L (pF)		T_A = 25°C			-40 to 85°C		-55 to 125°C		
					Min.	Typ.	Max.	Min.	Max.	Min.	Max.	
t_{TLH} t_{THL}	Output Transition Time	4.5	50			7	12		15		18	ns
t_{PLH} t_{PHL}	Propagation Delay Time	4.5	50			15	24		30		36	ns
		4.5	150			19	30		38		45	
t_{PZL} t_{PZH}	High Impedance Output Enable Time	4.5	50	R_L = 1 KΩ		16	25		31		38	ns
		4.5	150	R_L = 1 KΩ		20	31		39		47	
t_{PLZ} t_{PHZ}	High Impedance Output Disable Time	4.5	50	R_L = 1 KΩ		18	25		31		38	ns

CAPACITIVE CHARACTERISTICS

Symbol	Parameter	Test Condition		Value							Unit
		V_{CC} (V)		T_A = 25°C			-40 to 85°C		-55 to 125°C		
				Min.	Typ.	Max.	Min.	Max.	Min.	Max.	
C_{IN}	Input Capacitance				5	10		10		10	pF
C_{PD}	Power Dissipation Capacitance (note 1)				55						pF

1) C_{PD} is defined as the value of the IC's internal equivalent capacitance which is calculated from the operating current consumption without load. (Refer to Test Circuit). Average operating current can be obtained by the following equation. $I_{CC(opr)} = C_{PD} \times V_{CC} \times f_{IN} + I_{CC}/6$ (per Channel)

TEST CIRCUIT

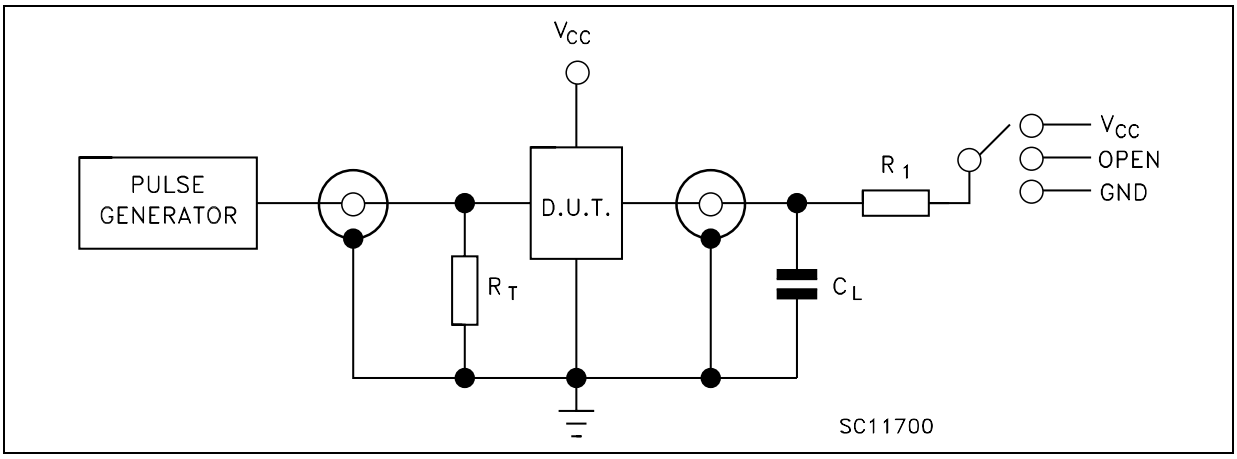

TEST	SWITCH
t_{PLH}, t_{PHL}	Open
t_{PZL}, t_{PLZ}	V_{CC}
t_{PZH}, t_{PHZ}	GND

C_L = 50pF/150pF or equivalent (includes jig and probe capacitance)
R_1 = 1KΩ or equivalent
R_T = Z_{OUT} of pulse generator (typically 50Ω)

WAVEFORM 1 : PROPAGATION DELAY TIMES (f=1MHz; 50% duty cycle)

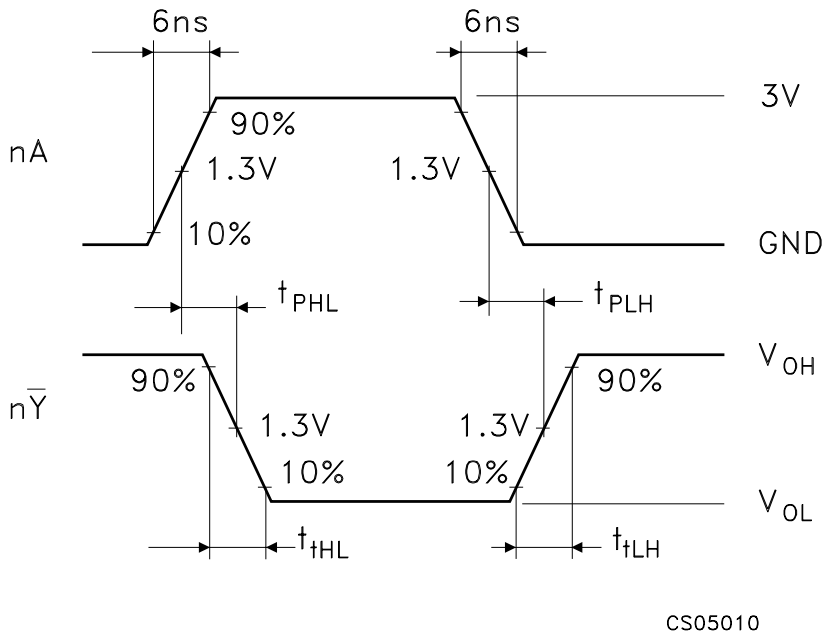

WAVEFORM 2 : OUTPUT ENABLE AND DISABLE TIMES (f=1MHz; 50% duty cycle)

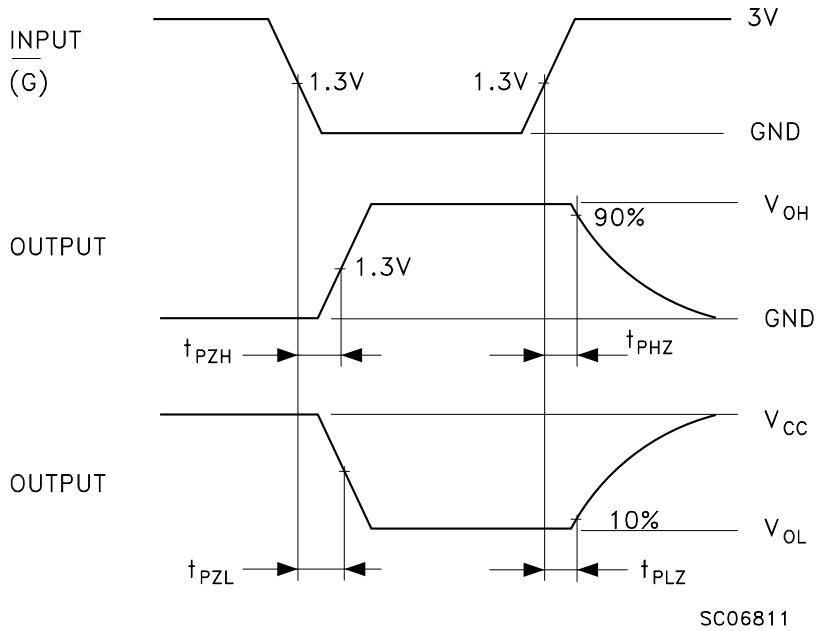

Plastic DIP-16 (0.25) MECHANICAL DATA

DIM.	mm.			inch		
	MIN.	TYP	MAX.	MIN.	TYP.	MAX.
a1	0.51			0.020		
B	0.77		1.65	0.030		0.065
b		0.5			0.020	
b1		0.25			0.010	
D			20			0.787
E		8.5			0.335	
e		2.54			0.100	
e3		17.78			0.700	
F			7.1			0.280
I			5.1			0.201
L		3.3			0.130	
Z			1.27			0.050

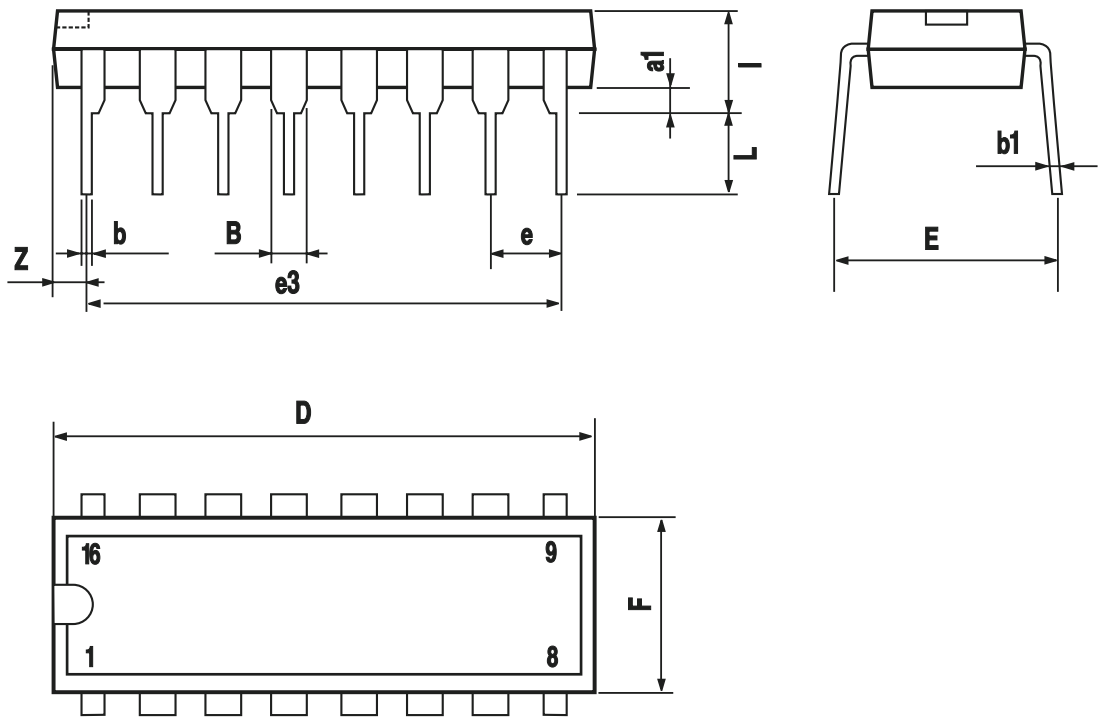

P001C

SO-16 MECHANICAL DATA

DIM.	mm.			inch		
	MIN.	TYP	MAX.	MIN.	TYP.	MAX.
A			1.75			0.068
a1	0.1		0.2	0.003		0.007
a2			1.65			0.064
b	0.35		0.46	0.013		0.018
b1	0.19		0.25	0.007		0.010
C		0.5			0.019	
c1	45° (typ.)					
D	9.8		10	0.385		0.393
E	5.8		6.2	0.228		0.244
e		1.27			0.050	
e3		8.89			0.350	
F	3.8		4.0	0.149		0.157
G	4.6		5.3	0.181		0.208
L	0.5		1.27	0.019		0.050
M			0.62			0.024
S	8° (max.)					

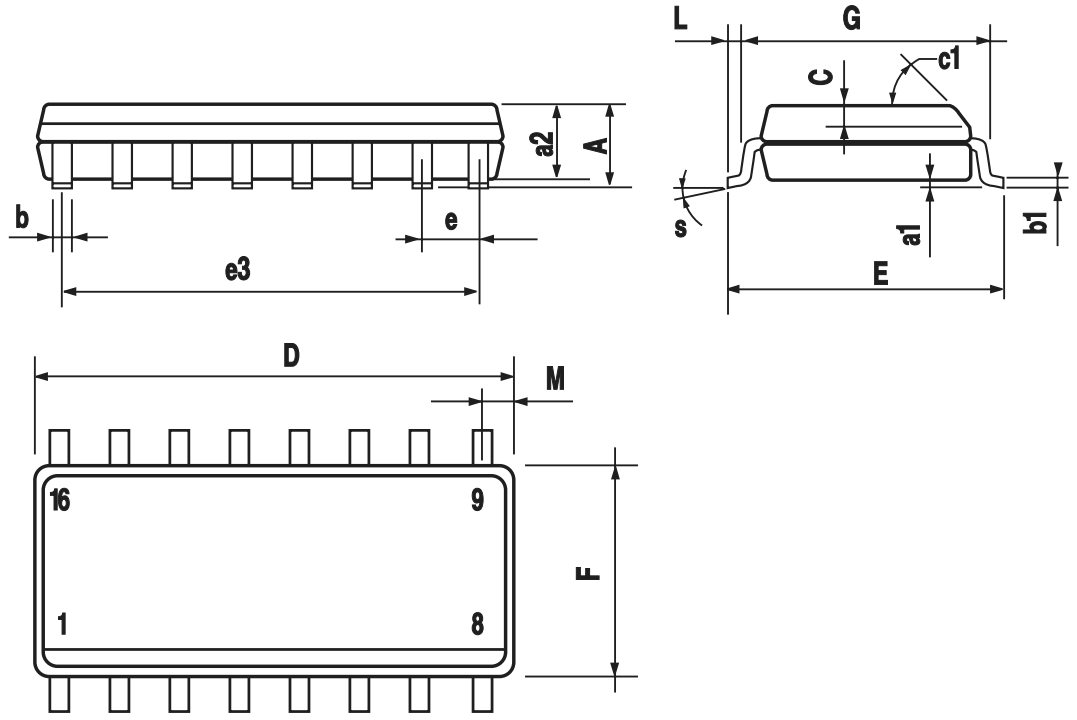

PO13H

TSSOP16 MECHANICAL DATA

DIM.	mm.			inch		
	MIN.	TYP	MAX.	MIN.	TYP.	MAX.
A			1.2			0.047
A1	0.05		0.15	0.002	0.004	0.006
A2	0.8	1	1.05	0.031	0.039	0.041
b	0.19		0.30	0.007		0.012
c	0.09		0.20	0.004		0.0089
D	4.9	5	5.1	0.193	0.197	0.201
E	6.2	6.4	6.6	0.244	0.252	0.260
E1	4.3	4.4	4.48	0.169	0.173	0.176
e		0.65 BSC			0.0256 BSC	
K	0°		8°	0°		8°
L	0.45	0.60	0.75	0.018	0.024	0.030

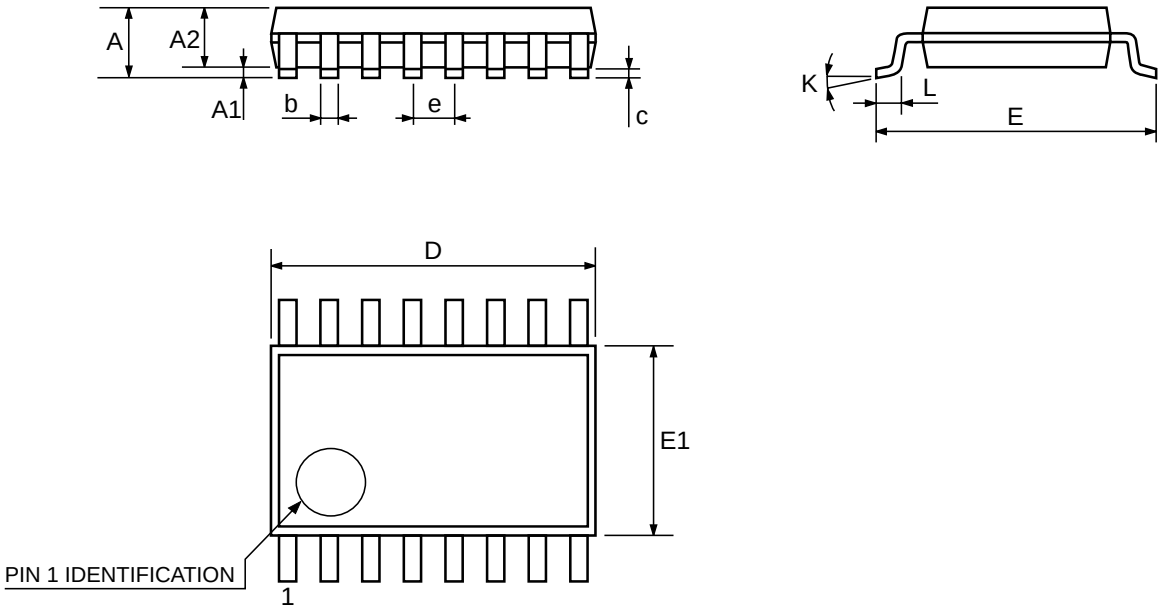

0080338D

Information furnished is believed to be accurate and reliable. However, STMicroelectronics assumes no responsibility for the consequences of use of such information nor for any infringement of patents or other rights of third parties which may result from its use. No license is granted by implication or otherwise under any patent or patent rights of STMicroelectronics. Specifications mentioned in this publication are subject to change without notice. This publication supersedes and replaces all information previously supplied. STMicroelectronics products are not authorized for use as critical components in life support devices or systems without express written approval of STMicroelectronics.

© The ST logo is a registered trademark of STMicroelectronics

© 2001 STMicroelectronics - Printed in Italy - All Rights Reserved
STMicroelectronics GROUP OF COMPANIES
Australia - Brazil - China - Finland - France - Germany - Hong Kong - India - Italy - Japan - Malaysia - Malta - Morocco
Singapore - Spain - Sweden - Switzerland - United Kingdom
© http://www.st.com