TSH151

WIDE BANDWIDTH AND MOS INPUTS SINGLE OPERATIONAL AMPLIFIER

- LOW DISTORTION
- GAIN BANDWIDTH PRODUCT : 150MHz
- UNITY GAIN STABLE
- SLEW RATE : 200V/µs
- VERY FAST SETTLING TIME : 70ns (0.1%)
- VERY HIGH INPUT IMPEDANCE

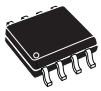

D
SO8
(Plastic Micropackage)

DESCRIPTION

The TSH151 is a wideband monolithic operational amplifier, internally compensated for unity-gain stability.

The TSH151 features extremely high input impedance (typically greater than $10^{12}\Omega$) allowing direct interfacing with high impedance sources.

Low distortion, wide bandwidth and high linearity make this amplifier suitable for RF and video applications. Short circuit protection is provided by an internal current-limiting circuit.

The TSH151 has internal electrostatic discharge (ESD) protection circuits and fulfills MILSTD883C-Class2.

ORDER CODE

Part Number	Temperature Range	Package
		D
TSH151I	-40°C, +125°C	•

D = Small Outline Package (SO) - also available in Tape & Reel (DT)

PIN CONNECTIONS (top view)

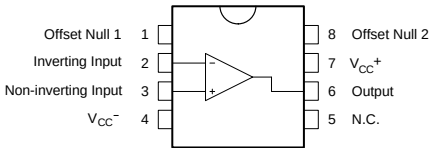

SCHEMATIC DIAGRAM

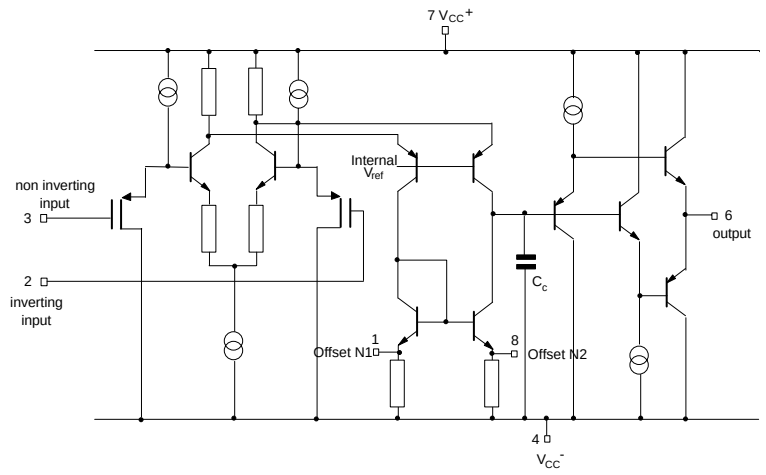

INPUT OFFSET VOLTAGE NULL CIRCUIT

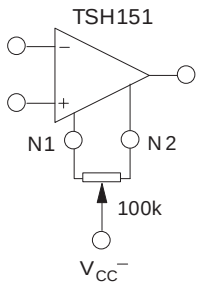

MAXIMUM RATINGS

Symbol	Parameter	Value	Unit
V_{CC}	Supply Voltage	±7	V
V_{id}	Differential Input Voltage	±5	V
V_i	Input Voltage	±5	V
I_{in}	Current On Offset Null Pins	±20	V
T_{oper}	Operating Free-Air Temperature range	-40 to +125	°C

OPERATING CONDITIONS

Symbol	Parameter	Value	Unit
V_{CC}	Supply Voltage	±3 to ±6	V
V_{ic}	Common Mode Input Voltage Range	V_{CC}^- to V_{CC}^+ -3	V

ELECTRICAL CHARACTERISTICS

V_{CC} = ±5V, T_{amb} = 25°C (unless otherwise specified)

Symbol	Parameter	Min.	Typ.	Max.	Unit
V_{io}	Input Offset Voltage $T_{min.} \le T_{amb} \le T_{max}$		0.5	10 12	mV
DV_{io}	Input Offset Voltage Drift $T_{min.} \le T_{amb} \le T_{max.}$		10		µV/°C
I_{ib}	Input Bias Current		2	300	pA
I_{io}	Input Offset Current		2	200	pA
I_{CC}	Supply Current, no load V_{CC} = ±5V V_{CC} = ±3V V_{CC} = ±6V $T_{min.} \le T_{amb} \le T_{max}$ V_{CC} = ±5V		23 21 25	30 28 40 32	mA
Avd	Large Signal Voltage Gain Vo = ±2.5V $R_L = \infty$ R_L = 100Ω R_L = 50Ω	800 300 200	1300 850 650		V/V
V_{icm}	Input Common Mode Voltage Range	-5 to +2	-5.5 to +2.5		V
CMR	Common-mode Rejection Ratio $V_{ic} = V_{icm\ min.}$	60	100		dB
SVR	Supply Voltage Rejection Ratio V_{CC} = ±5V to ±3V	50	70		dB
V_o	Output Voltage R_L = 100Ω R_L = 50Ω R_L = 100Ω $T_{min.} \le T_{amb} \le T_{max}$ R_L = 50Ω	±3 ±2.8 ±2.9 ±2.7	+3.5 -3.7 +3.3 -3.5		V
I_o	Output Short Circuit Current Vid = ±1V, Vo = 0V	±50	±100		mA
GBP	Gain Bandwidth Product A_{VCL} = 100, R_L = 100Ω, C_L = 15pF, f = 7.5MHz		150		MHz
SR	Slew Rate V_{in} = ±2V, A_{VCL} = 1, R_L = 100Ω, C_L = 15pF	100	200		V/µs
e_n	Equivalent Input Voltage Noise R_s = 50Ω f_o = 1kHz f_o = 1k0Hz f_o = 100kHz f_o = 1MHz		20 18.2 18.1 18.2		nV/√Hz
K_{ov}	Overshoot V_{in} = ±2V, A_{VCL} = 1, R_L = 100Ω, C_L = 15pF		10		%
t_s	Settling Time 0.1% [1)] V_{in} = ±1V, A_{VCL} = -1		70		ns
t_r, t_f	Rise and Fall Time (see note 1) V_{in} = ±100mV, A_{VCL} = 2		5		ns
t_d	Delay Time (see note 1) V_{in} = ±100mV, A_{VCL} = 2		4		ns
ϕm	Phase Margin A_{VM} = 1, R_L = 100Ω, C_L = 15pF		45		Degrees
THD	Total Harmonic Distortion A_{VCL} = 10, f = 1kHz, V_o = ±2.5V, no load		0.02		%
FPB	Full Power Bandwidth [2)] Vo = 5Vpp, R_L = 100Ω Vo = 2Vpp, R_L = 100Ω		13 32		MHz

1. See test waveform figure
2. Full power bandwidth = $\frac{SR}{\Pi Vopp}$

TEST WAVEFORM

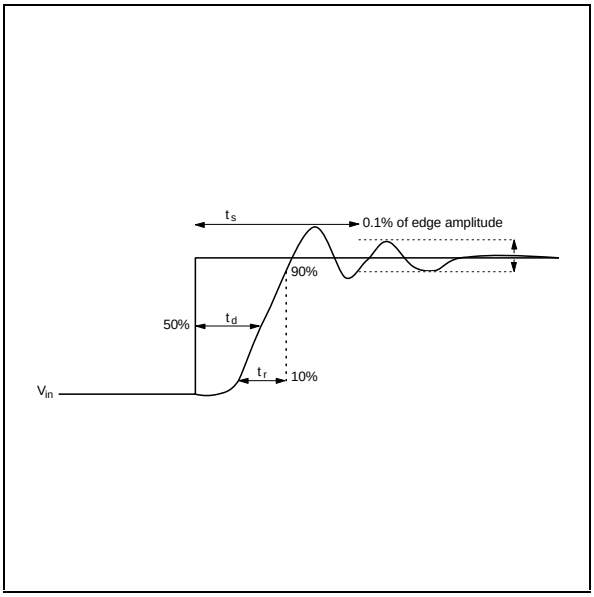

EVALUATION CIRCUIT

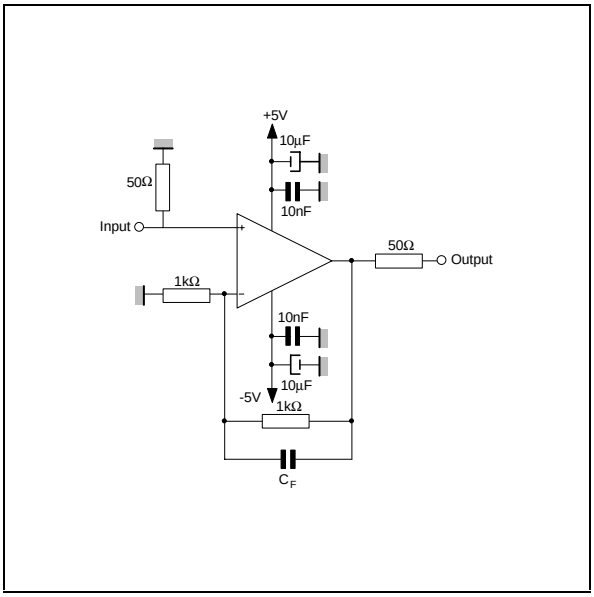

PRINTED CIRCUIT LAYOUT

As for any high frequency device, a few rules must be observed when designing the PCB to get the best performances from this high speed op amp.

From the most to the least important points :

- Each power supply lead has to be bypassed to ground with a 10nF ceramic capacitor very close to the device and a 10µF tantalum capacitor.
- To provide low inductance and low resistance common return, use a ground plane or common point return for power and signal.
- All leads must be wide and as short as possible especially for op amp inputs. This is in order to decrease parasitic capacitance and inductance.
- Use small resistor values to decrease time constant with parasitic capacitance.
- Choose component sizes as small as possible (SMD).
- On output, decrease capacitor load so as to avoid circuit stability being degraded which may cause oscillation. You can also add a serial resistor in order to minimise its influence.
- One can add in parallel with feedback resistor a few pF ceramic capacitor C_F adjusted to optimize the settling time.

MACROMODEL

Applies to: TSH151I

```
** Standard Linear Ics Macromodels, 1993.
** CONNECTIONS :
* 1 INVERTING INPUT
* 2 NON-INVERTING INPUT
* 3 OUTPUT
* 4 POSITIVEPOWER SUPPLY
* 5 NEGATIVE POWER SUPPLY
.SUBCKT TSH151 1 3 2 4 5 (analog)
*******************************************************
.MODEL MDTH D IS=1E-8 KF=3.322525E-14 CJO=10F
* INPUT STAGE
RESD1 2 202 150
RESD2 1 201 150
CIP 202 5 10.000000E-12
CIN 201 5 10.000000E-12
EIP 10 5 202 5 1
EIN 16 5 201 5 1
RIP 10 11 2.600000E-01
RIN 15 16 2.600000E-01
RIS 11 15 1.683423E-01
DIP 11 12 MDTH 400E-12
DIN 15 14 MDTH 400E-12
VOFP 12 13 DC 0.000000E+00
VOFN 13 14 DC 0
IPOL 13 5 1.000000E-03
CPS 11 15 8E-09
DINN 17 13 MDTH 400E-12
VIN 17 5 1.500000e+00
DINR 15 18 MDTH 400E-12
VIP 4 18 5.000000E-01
FCP 4 5 VOFP 2.200000E+01
FCN 5 4 VOFN 2.200000E+01
* AMPLIFYING STAGE
FIP 5 19 VOFP 3.800000E+02
FIN 5 19 VOFN 3.800000E+02
RG1 19 5 1.455096E+03
RG2 19 4 1.455096E+03
CC 19 29 2.000000E-09
HZTP 29 30 VOFP 100
HZTN 30 5 VOFN 100
DOPM 19 22 MDTH 400E-12
DONM 21 19 MDTH 400E-12
HOPM 22 28 VOUT 5.000000E+02
VIPM 28 4 5.000000E+01
HONM 21 27 VOUT 5.000000E+02
VINM 5 27 5.000000E+01
EOUT 26 23 19 5 1
VOUT 23 5 0
ROUT 26 3 9.978126E+00
COUT 3 5 1.000000E-13
DOP 19 25 MDTH 400E-12
VOP 4 25 1.946965E+00
DON 24 19 MDTH 400E-12
VON 24 5 1.946965E+00
.ENDS
```

ELECTRICAL CHARACTERISTICS

V_{CC} = ±5V, T_{amb} = 25°C (unless otherwise specificed)

Symbol	Conditions	Value	Unit
V_{io}		0	mV
A_{vd}	R_L = 100Ω	1.18	V/mV
I_{CC}	No load	23	mA
V_{icm}		-5 to 2.5	V
V_{OH}	R_L = 100Ω	+3.6	V
V_{OL}	R_L = 100Ω	-3.6	V
I_{sink}	V_o = 0V	108	mA
I_{source}	V_o = 0V	108	mA
GBP	R_L = 100Ω, C_L = 15pF	130	MHz
SR	R_L = 100Ω, C_L = 15pF	172	V/µs
ϕm	R_L = 100Ω, C_L = 15pF	25	Degrees
t_s	A_v = -1 at 0.1%	40	ns

PACKAGE MECHANICAL DATA
8 PINS - PLASTIC MICROPACKAGE (SO)

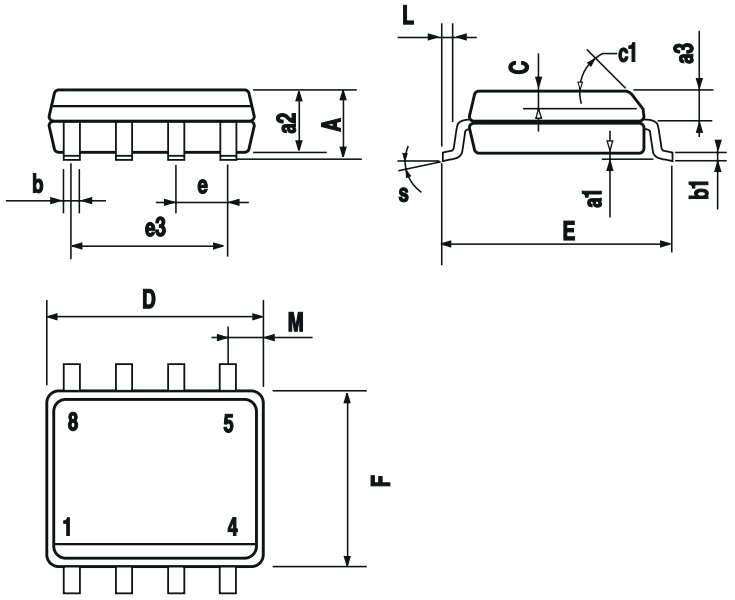

Dim.	Millimeters			Inches		
	Min.	Typ.	Max.	Min.	Typ.	Max.
A			1.75			0.069
a1	0.1		0.25	0.004		0.010
a2			1.65			0.065
a3	0.65		0.85	0.026		0.033
b	0.35		0.48	0.014		0.019
b1	0.19		0.25	0.007		0.010
C	0.25		0.5	0.010		0.020
c1	45° (typ.)					
D	4.8		5.0	0.189		0.197
E	5.8		6.2	0.228		0.244
e		1.27			0.050	
e3		3.81			0.150	
F	3.8		4.0	0.150		0.157
L	0.4		1.27	0.016		0.050
M			0.6			0.024
S	8° (max.)					