TOSHIBA Bipolar Digital Integrated Circuit Silicon Monolithic

TD62318BPG,TD62318BFG

4ch Low Input Active High-Current Darlington Sink Driver

The TD62318BPG and TD62318BFG are non-inverting transistor array which are comprised of four NPN darlington output stages and PNP input stages.
This device is low level input active driver and are suitable for operation with TTL, 5 V CMOS and 5 V Microprocessor which have sink current output drivers.
Applications include relay, hammer, lamp and stepping motor drivers.

TD62318BPG

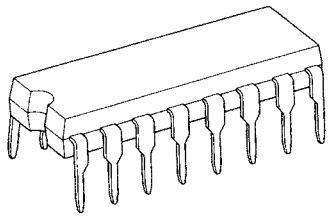

DIP16-P-300-2.54A

TD62318BFG

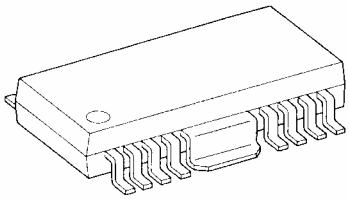

HSOP16-P-300-1.00

Weight
DIP16-P-300-2.54A : 1.11 g (typ.)
HSOP16-P-300-1.00 : 0.50 g (typ.)

Features

- Two V_{CC} terminals V_{CC1}, V_{CC2} (Separated)
- Package type BPG : DIP-16 pin
  BFG : HSOP-16 pin
- High sustaining voltage output : $V_{CE\ (SUS)}$ = 80 V (min)
- Output current (Single output) : I_{OUT} = 700 mA/ch (max)
- Output clamp diodes
- Input compatible with TTL and 5 V CMOS
- GND and SUB terminal = Heat sink
- Low level active input
- Standard supply voltage

Pin Connection (top view)

TD62318BPG

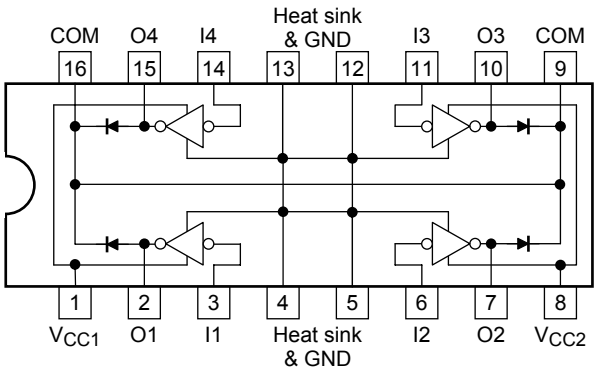

AD62318BFG

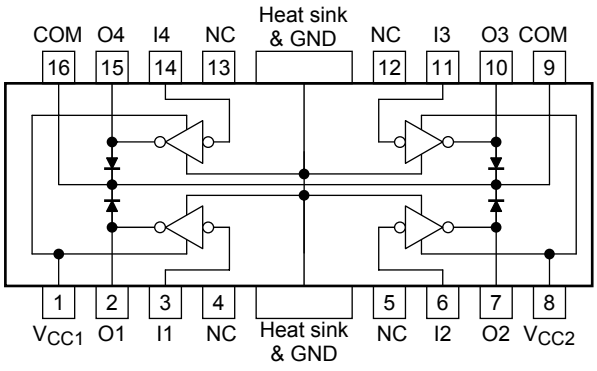

Schematics (each driver)

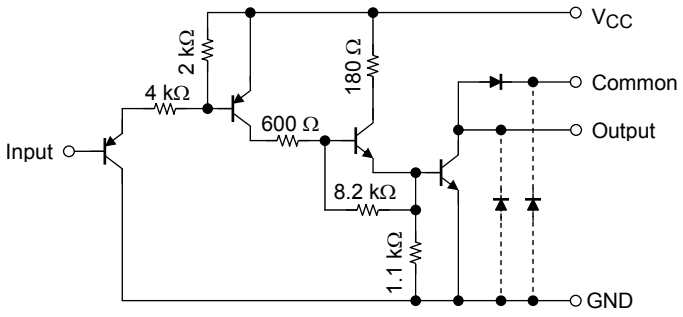

Note: The input and output parastitic diodes cannot be used as clamp diodes.

Maximum Ratings (Ta = 25°C)

Characteristics		Symbol	Rating	Unit
Supply voltage		V_{CC}	−0.5 to 17	V
Output sustaining voltage		$V_{CE\ (SUS)}$	−0.5 to 80	V
Output current		I_{OUT}	700	mA/ch
Input current		I_{IN}	−10	mA
Input voltage		V_{IN}	−0.5 to 17	V
Clamp diode reverse voltage		V_R	80	V
Clamp diode forward current		I_F	700	mA
Power dissipation	BPG	P_D	1.47/2.7 (Note 1)	W
	BFG		0.9/1.4 (Note 2)	
Operating temperature		T_{opr}	−40 to 85	°C
Storage temperature		T_{stg}	−55 to 150	°C

Note 1: On glass epoxy PCB (50 × 50 × 1.6 mm Cu 50%)
Note 2: On glass epoxy PCB (60 × 60 × 1.6 mm Cu 30%)

Recommended Operating Conditions (Ta = −40 to 85°C)

Characteristics		Symbol	Condition		Min	Typ.	Max	Unit
Supply voltage		V_{CC}	—		4.5	—	5.5	V
Output Sustaining voltage		$V_{CE\ (SUS)}$	—		0	—	80	V
Output current	BPG (Note 1)	I_{OUT}	DC 1 circuit, Ta = 25°C		0	—	570	mA/ch
			T_{pw} = 25 ms, 4 circuits, Ta = 85°C, T_j = 120°C	Duty = 10%	0	—	570	
				Duty = 50%	0	—	330	
	BFG (Note 2)			Duty = 10%	0	—	570	
				Duty = 50%	0	—	100	
Input voltage		V_{IN}	—		0	—	15	V
	Output on	$V_{IN\ (ON)}$	—		0	—	V_{CC} − 3.6	V
	Output off	$V_{IN\ (OFF)}$	—		V_{CC} − 1.6	—	15.0	
Clamp diode reverse voltage		V_R	—		—	—	80	V
Clamp diode forward current		I_F	—		—	—	570	mA
Power dissipation	BPG	P_D	Ta = 85°C	(Note 1)	—	—	1.4	W
	BFG		Ta = 85°C	(Note 2)	—	—	0.7	

Note 1: On glass epoxy PCB (50 × 50 × 1.6 mm Cu 50%)
Note 2: On glass epoxy PCB (60 × 30 × 1.6 mm Cu 30%)

Electrical Characteristics (Ta = 25°C)

Characteristics		Symbol	Test Circuit	Test Condition	Min	Typ.	Max	Unit
Input voltage	"H" level	V_{IH}	—	—	V_{CC} − 1.6	—	15	V
	"L" level	V_{IL}		—	0	—	V_{CC} − 3.6	
Input current	"H" level	I_{IH}	2	—	—	—	10	μA
	"L" level	I_{IL}		—	—	−0.05	−0.36	mA
Output leakage current		I_{CEX}	1	V_{CE} = 80 V, Ta = 25°C	—	—	50	μA
				V_{CE} = 80 V, Ta = 85°C	—	—	100	
Output saturation voltage		$V_{CE\ (sat)}$	3	I_{OUT} = 0.5 A, V_{CC} = 4.5 V	—	—	0.8	V
				I_{OUT} = 0.2 A, V_{CC} = 4.5 V	—	—	0.45	
Clamp diode reverse current		I_R	4	V_R = 80 V, Ta = 25°C	—	—	50	μA
				V_R = 80 V, Ta = 85°C	—	—	100	
Clamp diode forward voltage		V_F	5	I_F = 500 mA	—	—	2.0	V
Supply current	Output on	$I_{CC\ (ON)}$	2	V_{CC} = 5.5 V, V_{IN} = 0 V	—	35	40	mA/ch
	Output off	$I_{CC\ (OFF)}$	2	V_{CC} = 5.5 V, V_{IN} = V_{CC}	—	—	10	μA
Turn-on delay		t_{ON}	6	V_{OUT} = 80 V, R_L = 142 Ω V_{CC} = 5.0 V, C_L = 15 pF	—	0.4	0.8	μs
Turn-off delay		t_{OFF}			—	8.0	16.0	

Test Circuit

1. I_{CEX}

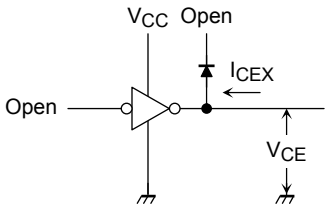

2. I_{IH}, I_{IL}

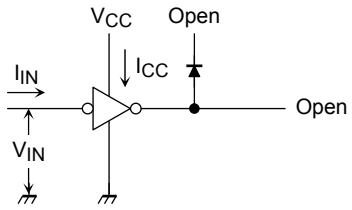

3. $V_{CE\ (sat)}$

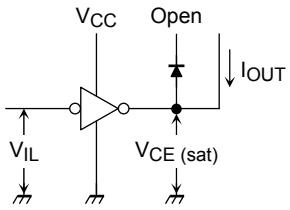

4. I_R

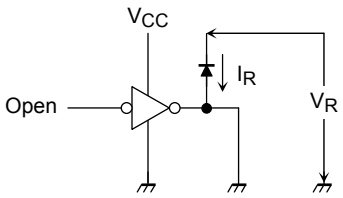

5. V_F

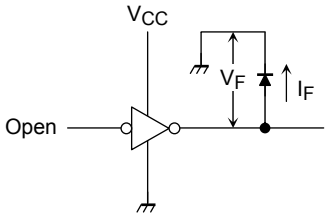

6. t_{ON}, t_{OFF}

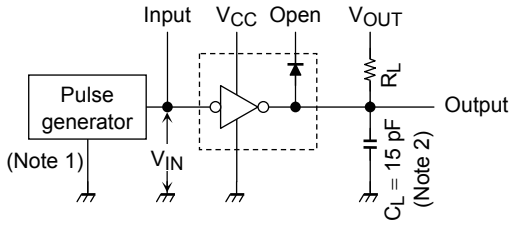

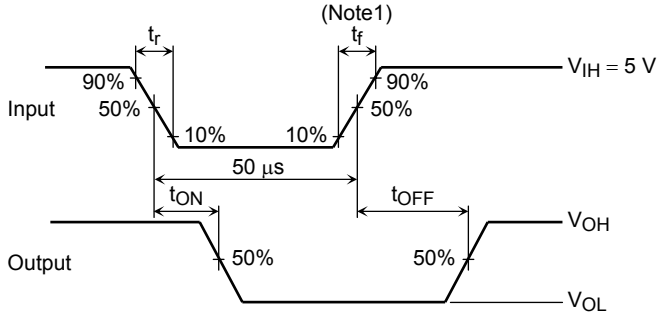

Note 1: Pulse width 50 μs, duty cycle 10%, output impedance 50 Ω, $t_r \leq 5$ ns, $t_f \leq 10$ ns

Note 2: C_L includes probe and jig capacitance.

Precautions for Using

This IC does not include built-in protection circuits for excess current or overvoltage.
If this IC is subjected to excess current or overvoltage, it may be destroyed.
Hence, the utmost care must be taken when systems which incorporate this IC are designed.
Utmost care is necessary in the design of the output line, V_{CC}, COMMON and GND line since IC may be destroyed due to short-circuit between outputs, air contamination fault, or fault by improper grounding.

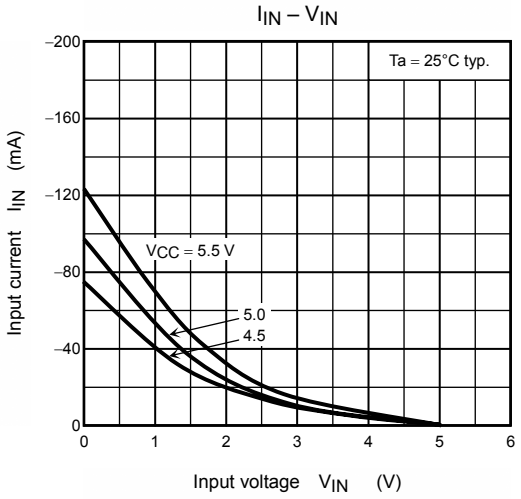
IIN – VIN
Ta = 25°C typ.
VCC = 5.5 V
5.0
4.5
Input current IIN (mA)
Input voltage VIN (V)

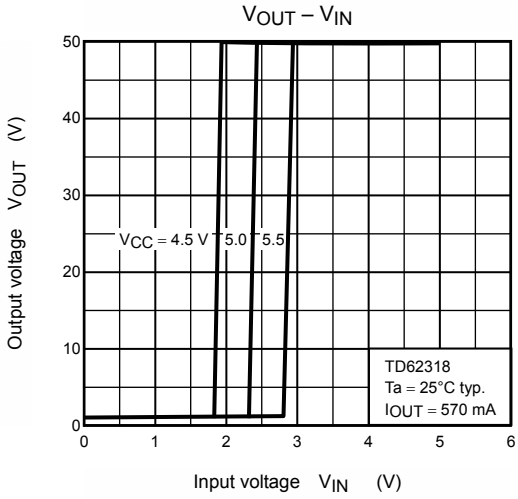
VOUT – VIN
VCC = 4.5 V 5.0 5.5
TD62318
Ta = 25°C typ.
IOUT = 570 mA
Output voltage VOUT (V)
Input voltage VIN (V)

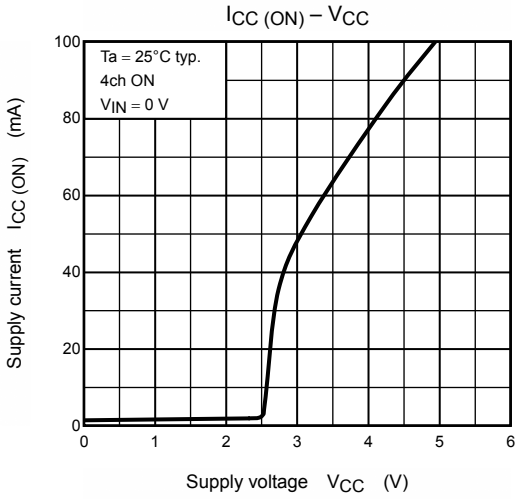
ICC (ON) – VCC
Ta = 25°C typ.
4ch ON
VIN = 0 V
Supply current ICC (ON) (mA)
Supply voltage VCC (V)

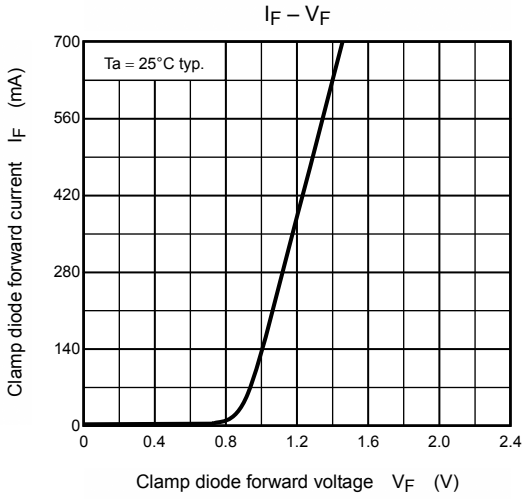
IF – VF
Ta = 25°C typ.
Clamp diode forward current IF (mA)
Clamp diode forward voltage VF (V)

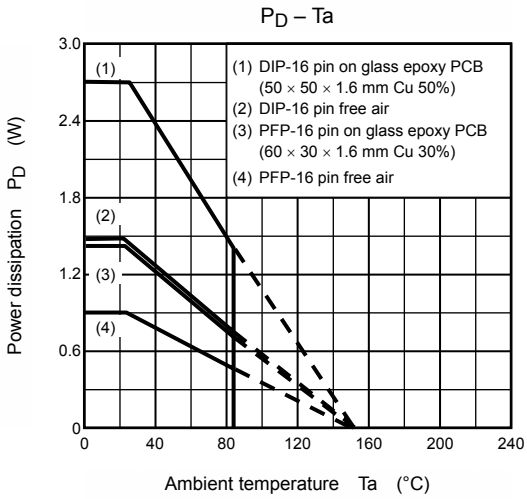
PD – Ta
(1) DIP-16 pin on glass epoxy PCB (50 × 50 × 1.6 mm Cu 50%)
(2) DIP-16 pin free air
(3) PFP-16 pin on glass epoxy PCB (60 × 30 × 1.6 mm Cu 30%)
(4) PFP-16 pin free air
Power dissipation PD (W)
Ambient temperature Ta (°C)

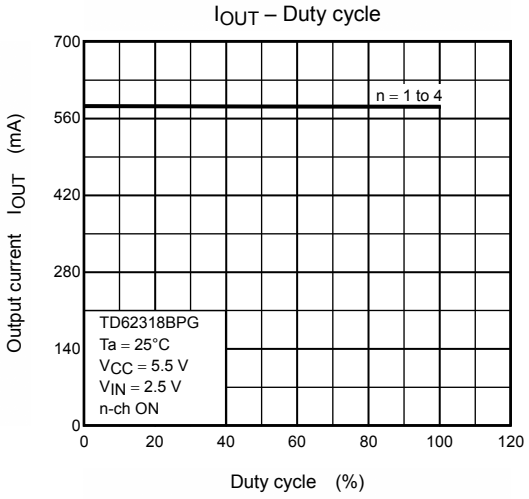
IOUT – Duty cycle
Output current IOUT (mA)
Duty cycle (%)
n = 1 to 4
TD62318BPG
Ta = 25°C
VCC = 5.5 V
VIN = 2.5 V
n-ch ON

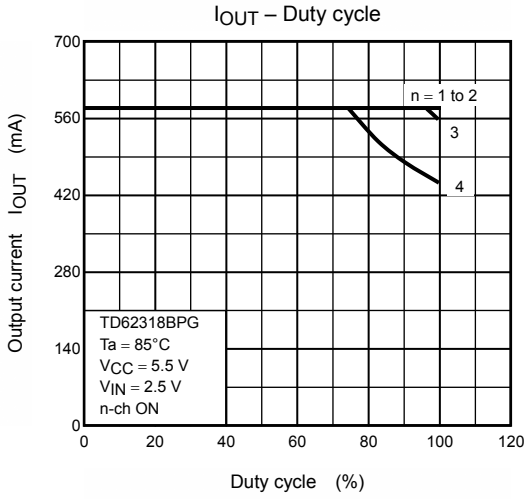
IOUT – Duty cycle
Output current IOUT (mA)
Duty cycle (%)
n = 1 to 2
3
4
TD62318BPG
Ta = 85°C
VCC = 5.5 V
VIN = 2.5 V
n-ch ON

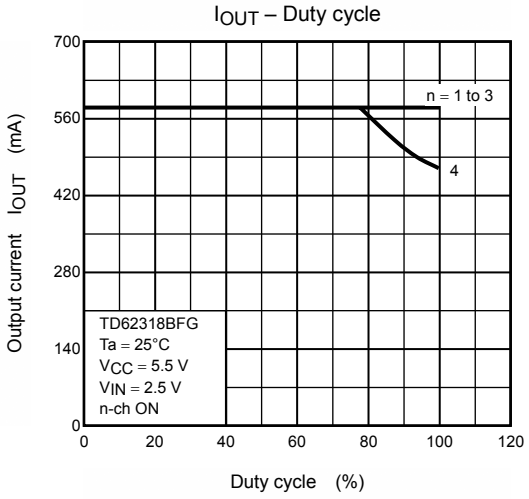
IOUT – Duty cycle
Output current IOUT (mA)
Duty cycle (%)
n = 1 to 3
4
TD62318BFG
Ta = 25°C
VCC = 5.5 V
VIN = 2.5 V
n-ch ON

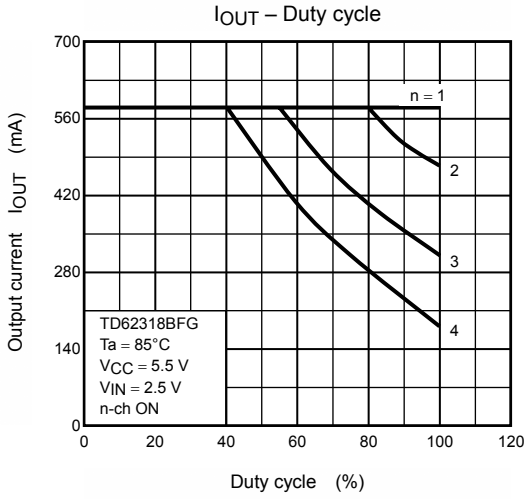
IOUT – Duty cycle
Output current IOUT (mA)
Duty cycle (%)
n = 1
2
3
4
TD62318BFG
Ta = 85°C
VCC = 5.5 V
VIN = 2.5 V
n-ch ON

Package Dimensions

DIP16-P-300-2.54A Unit : mm

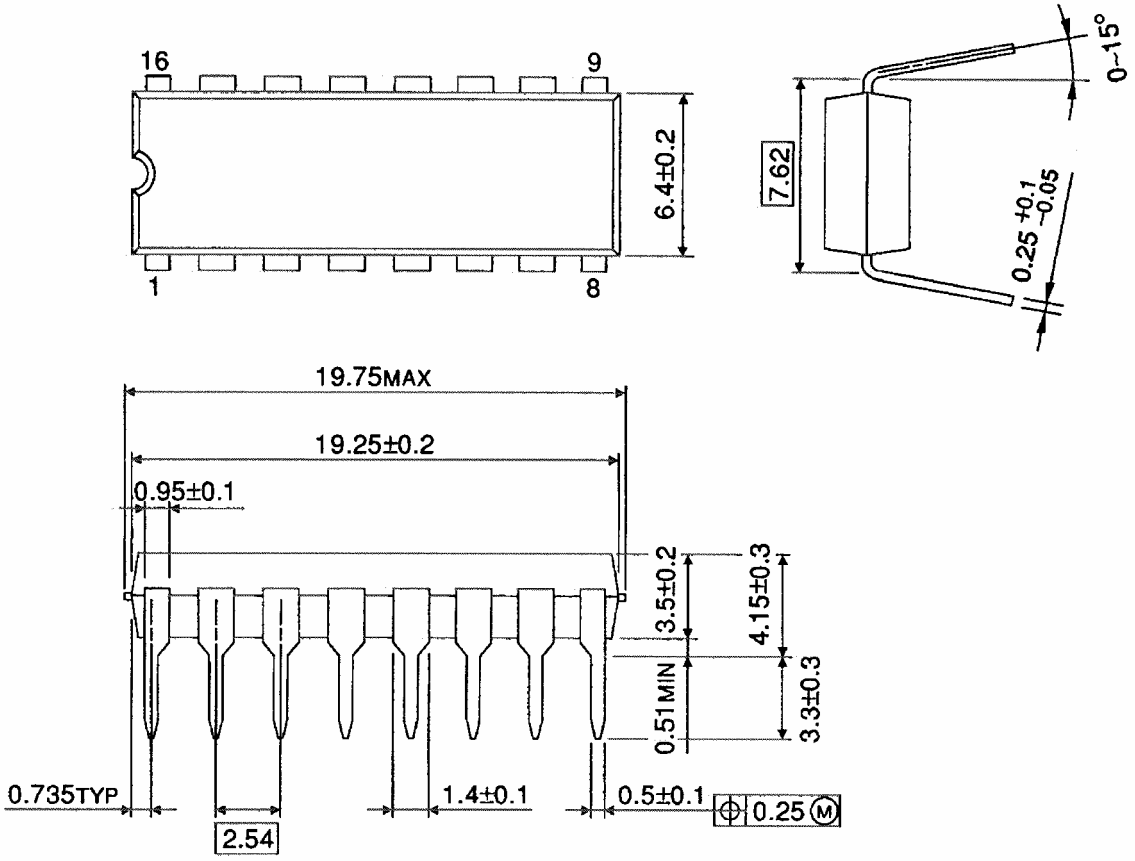

Weight: 1.11 g (typ.)

Package Dimensions

HSOP16-P-300-1.00 Unit : mm

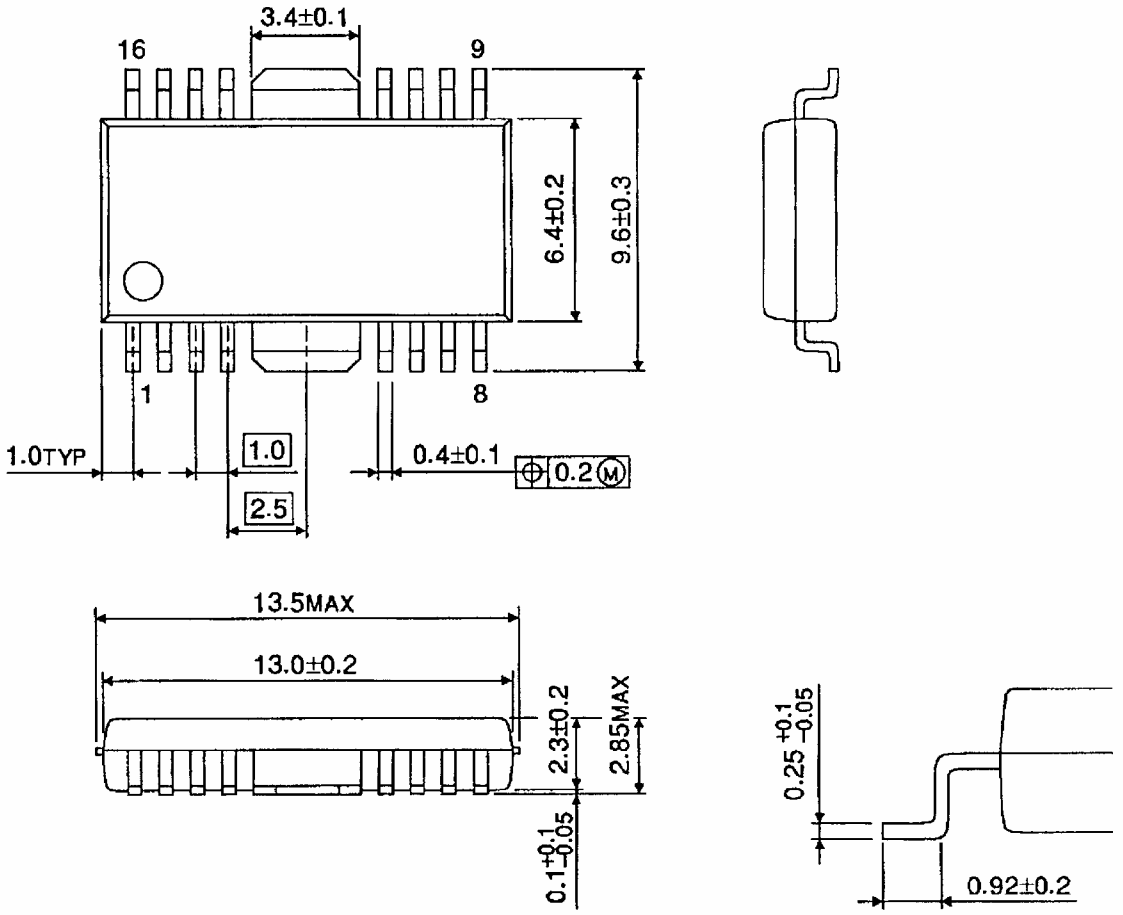

Weight: 0.50 g (typ.)

About solderability, following conditions were confirmed

- Solderability

  (1) Use of Sn-63Pb solder Bath
  - solder bath temperature = 230°C
  - dipping time = 5 seconds
  - the number of times = once
  - use of R-type flux

  (2) Use of Sn-3.0Ag-0.5Cu solder Bath
  - solder bath temperature = 245°C
  - dipping time = 5 seconds
  - the number of times = once
  - use of R-type flux

RESTRICTIONS ON PRODUCT USE

030619EBA

- The information contained herein is subject to change without notice.
- The information contained herein is presented only as a guide for the applications of our products. No responsibility is assumed by TOSHIBA for any infringements of patents or other rights of the third parties which may result from its use. No license is granted by implication or otherwise under any patent or patent rights of TOSHIBA or others.
- TOSHIBA is continually working to improve the quality and reliability of its products. Nevertheless, semiconductor devices in general can malfunction or fail due to their inherent electrical sensitivity and vulnerability to physical stress. It is the responsibility of the buyer, when utilizing TOSHIBA products, to comply with the standards of safety in making a safe design for the entire system, and to avoid situations in which a malfunction or failure of such TOSHIBA products could cause loss of human life, bodily injury or damage to property.
  In developing your designs, please ensure that TOSHIBA products are used within specified operating ranges as set forth in the most recent TOSHIBA products specifications. Also, please keep in mind the precautions and conditions set forth in the “Handling Guide for Semiconductor Devices,” or “TOSHIBA Semiconductor Reliability Handbook” etc..
- The TOSHIBA products listed in this document are intended for usage in general electronics applications (computer, personal equipment, office equipment, measuring equipment, industrial robotics, domestic appliances, etc.). These TOSHIBA products are neither intended nor warranted for usage in equipment that requires extraordinarily high quality and/or reliability or a malfunction or failure of which may cause loss of human life or bodily injury (“Unintended Usage”). Unintended Usage include atomic energy control instruments, airplane or spaceship instruments, transportation instruments, traffic signal instruments, combustion control instruments, medical instruments, all types of safety devices, etc.. Unintended Usage of TOSHIBA products listed in this document shall be made at the customer’s own risk.
- The products described in this document are subject to the foreign exchange and foreign trade laws.
- TOSHIBA products should not be embedded to the downstream products which are prohibited to be produced and sold, under any law and regulations.