SGS-THOMSON MICROELECTRONICS

UA741

GENERAL PURPOSE SINGLE OPERATIONAL AMPLIFIERS

- LARGE INPUT VOLTAGE RANGE
- NO LATCH-UP
- HIGH GAIN
- SHORT-CIRCUIT PROTECTION
- NO FREQUENCY COMPENSATION REQUIRED
- SAME PIN CONFIGURATION AS THE UA709
- ESD INTERNAL PROTECTION

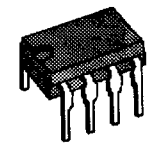

N
DIP8
(Plastic Package)

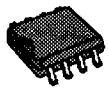

D
SO8
(Plastic Micropackage)

DESCRIPTION

The UA741 is a high performance monolithic operational amplifier constructed on a single silicon chip. It is intented for a wide range of analog applications.

- Summing amplifier
- Voltage follower
- Integrator
- Active filter
- Function generator

The high gain and wide range of operating voltages provide superior performances in integrator, summing amplifier and general feedback applications. The internal compensation network (6dB / octave) insures stability in closed loop circuits.

ORDER CODES

Part Number	Temperature Range	Package	
		N	D
UA741C/E	0°C, +70°C	•	•
UA741I	-40°C, +105°C	•	•
UA741M/A	-55°C, +125°C	•	•
Example : UA741CN			

741-01 TBL

PIN CONNECTIONS (top view)

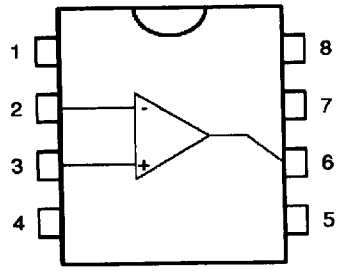

1 - Offset null 1
2 - Inverting input
3 - Non-inverting input
4 - V_{CC}^-
5 - Offset null 2
6 - Output
7 - V_{CC}^+
8 - N.C.

7929237 0076599 251

Powered by ICminer.com Electronic-Library Service CopyRight 2003

SCHEMATIC DIAGRAM

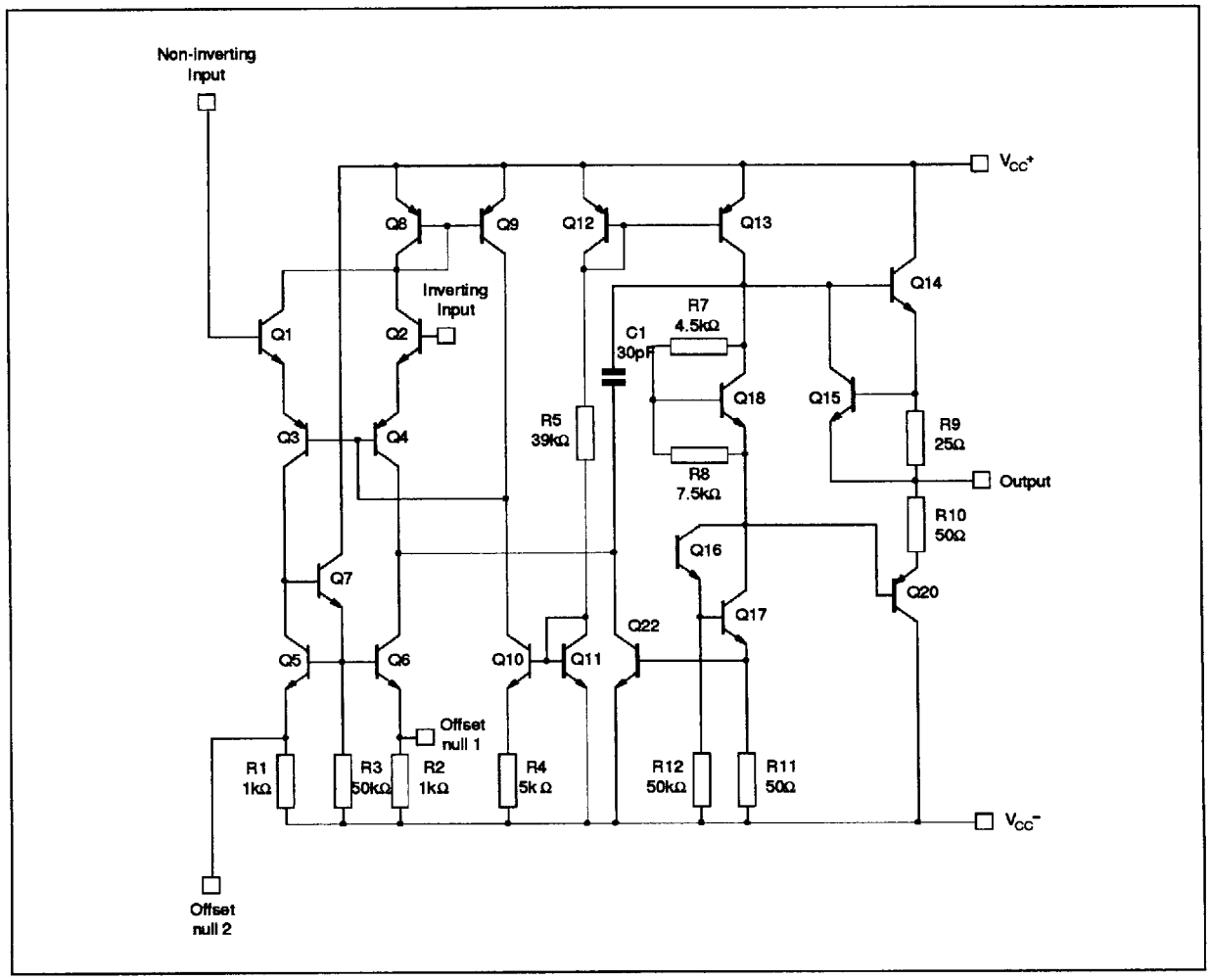

ABSOLUTE MAXIMUM RATINGS

Symbol	Parameter	UA741M-A	UA741I	UA741C-E	Unit
V_{CC}	Supply Voltage	±22	±22	±22	V
V_i	Input Voltage - (note1)	±15	±15	±15	V
V_{id}	Differential Input Voltage	±30	±30	±30	V
P_{tot}	Power Dissipation	500	500	500	mW
	Output Short-circuit Duration	Infinite			
T_{oper}	Operating Free Air Temperature Range	-55 to +125	-40 to +105	0 to +70	°C
T_{stg}	Storage Temperature Range	-65 to +150	-65 to +150	-65 to +150	°C

741-02 TBL

Note : 1. The magnitude of the input voltage must never exceed the magnitude of the positive and negative supply voltage.

7929237 0076600 8T3

Powered by ICminer.com Electronic-Library Service CopyRight 2003

ELECTRICAL CHARACTERISTICS

V_{CC} = ±15V, T_{amb} = 25°C (unless otherwise specified)

Symbol	Parameter	Min.	Typ.	Max.	Unit
V_{io}	Input Offset Voltage ($R_s \leq 10k\Omega$) T_{amb} = 25°C $T_{min} \leq T_{amb} \leq T_{max}$ UA741E,A T_{amb} = 25°C $T_{min} \leq T_{amb} \leq T_{max}$		 1 1	 5 6 2 4	mV
I_{io}	Input Offset Current T_{amb} = 25°C $T_{min} \leq T_{amb} \leq T_{max}$		 2	 30 70	nA
I_{ib}	Input Bias Current T_{amb} = 25°C $T_{min} \leq T_{amb} \leq T_{max}$		 10	 100 200	nA
A_{vd}	Large Signal Voltage Gain (V_o = ±10V, R_L = 2kΩ) T_{amb} = 25°C $T_{min} \leq T_{amb} \leq T_{max}$	 50 25	 200		V/mV
SVR	Supply Voltage Rejection Ratio ($R_s \leq 10k\Omega$) T_{amb} = 25°C $T_{min} \leq T_{amb} \leq T_{max}$	 77 77	 90		dB
I_{CC}	Supply Current, no load T_{amb} = 25°C $T_{min.} \leq T_{amb} \leq T_{max}$		 1	 2.8 3.3	mA
V_{icm}	Input Common Mode Voltage Range T_{amb} = 25°C $T_{min} \leq T_{amb} \leq T_{max}$	 ±12 ±12			V
CMR	Common Mode Rejection Ratio ($R_s \leq 10k\Omega$) T_{amb} = 25°C $T_{min} \leq T_{amb} \leq T_{max}$	 70 70	 90		dB
I_{os}	Output Short-circuit Current	10	35		mA
$\pm V_{OPP}$	Output Voltage Swing T_{amb} = 25°C R_L = 10kΩ R_L = 2kΩ $T_{min} \leq T_{amb} \leq T_{max}$ R_L = 10kΩ R_L = 2kΩ	 12 10 12 10	 14 13		V
SR	Slew Rate (V_i = ±10V, R_L = 2kΩ , C_L = 100pF, T_{amb} = 25°C, unity gain)	0.25	0.5		V/µs
t_r	Rise Time (V_i = ±20mV, R_L = 2kΩ , C_L = 100pF, T_{amb} = 25°C, unity gain)		0.3		µs
K_{OV}	Overshoot (V_i = ±20mV, R_L = 2kΩ , C_L = 100pF, T_{amb} = 25°C, unity gain)		5		%
R_i	Input Resistance	0.3	2		MΩ
GBP	Gain Bandwidth Product (V_i = 10mV, R_L = 2kΩ , C_L = 100pF, f = 100kHz)	0.7	1		MHz
THD	Total Harmonic Distortion (f = 1kHz, A_V = 20dB, R_L = 2kΩ, V_o = $2V_{PP}$, C_L = 100pF, T_{amb} = 25°C)		0.06		%
e_n	Equivalent Input Noise Voltage (f = 1kHz, R_s = 100Ω)		23		$\frac{nV}{\sqrt{Hz}}$
Øm	Phase Margin		70		Degrees

741-03 TBL

7929237 0076601 73T

Powered by ICminer.com Electronic-Library Service CopyRight 2003

OPEN LOOP VOLTAGE GAIN (Typ.)

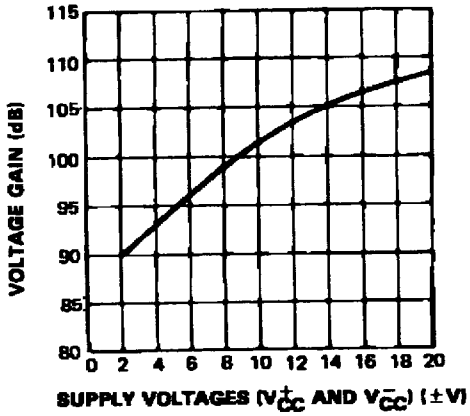

741-04 EPS

OPEN LOOP FREQUENCY RESPONSE (Typ.)

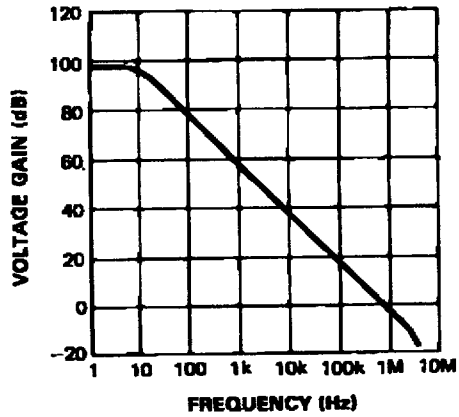

741-05 EPS

TRANSIENT RESPONSE (Typ.)

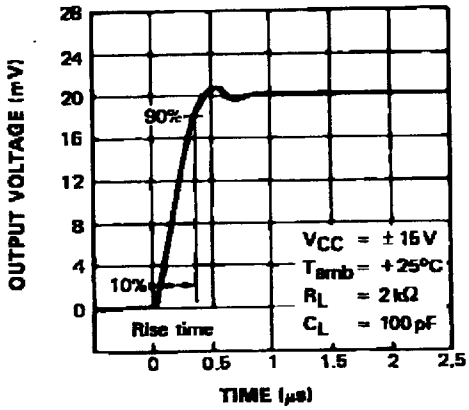

741-06 EPS

ABSOLUTE MAXIMUM POWER DISSIPATION

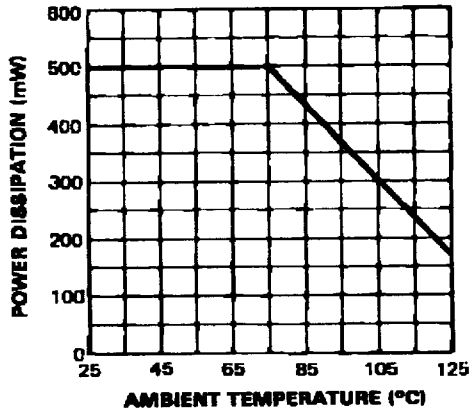

741-07 EPS

OUTPUT VOLTAGE SWING

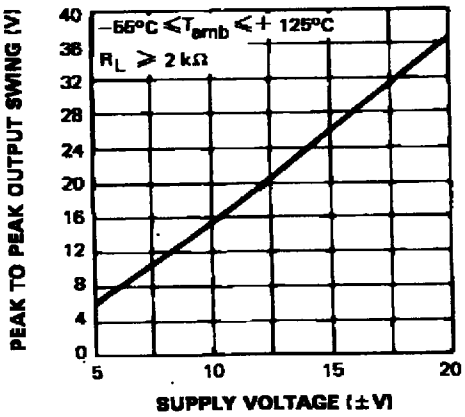

741-08 EPS

INPUT COMMON MODE VOLTAGE RANGE

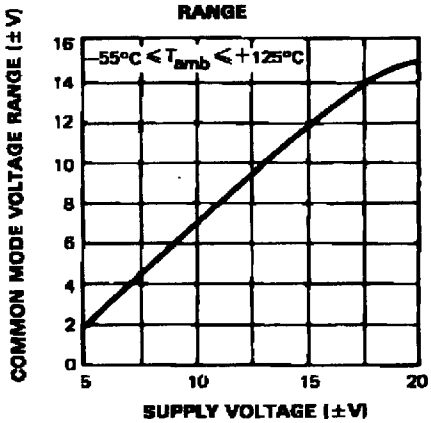

741-09 EPS

7929237 0076602 676

Powered by ICminer.com Electronic-Library Service CopyRight 2003

POWER CONSUMPTION

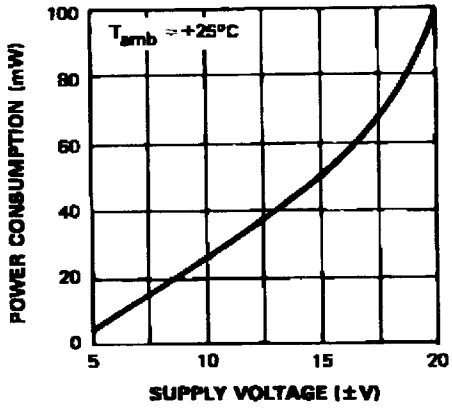

741-10 EPS

OUTPUT CURRENT vs AMBIENT TEMPERATURE

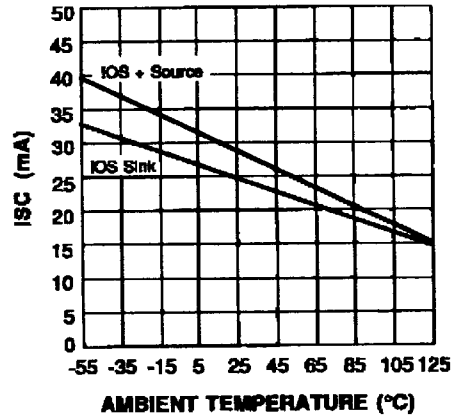

741-11 EPS

OUTPUT VOLTAGE SWING

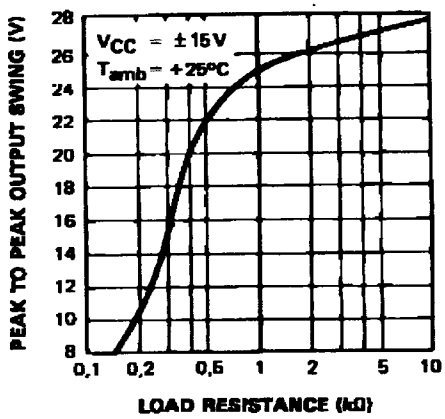

741-12 EPS

OUTPUT VOLTAGE SWING

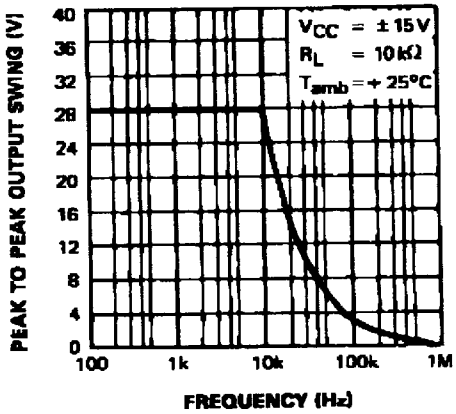

741-13 EPS

EQUIVALENT INPUT NOISE vs FREQUENCY
Rg = 100 Ω

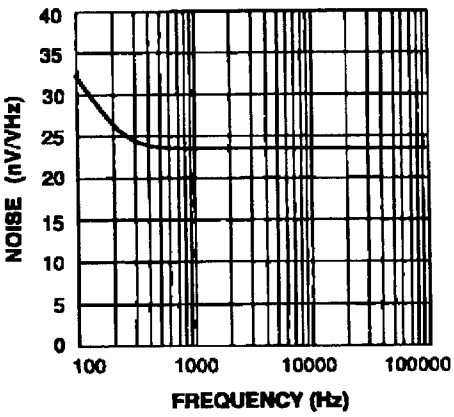

741-14 EPS

INPUT NOISE CURRENT

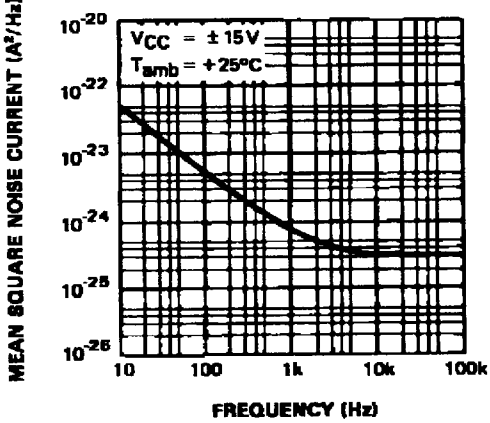

741-15 EPS

7929237 0076603 502

Powered by ICminer.com Electronic-Library Service CopyRight 2003

EQUIVALENT INPUT NOISE vs AMBIENT TEMPERATURE

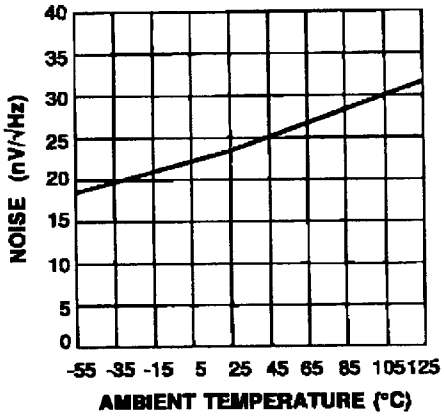

741-16.EPS

LARGE SIGNAL VOLTAGE GAIN vs AMBIENT TEMPERATURE

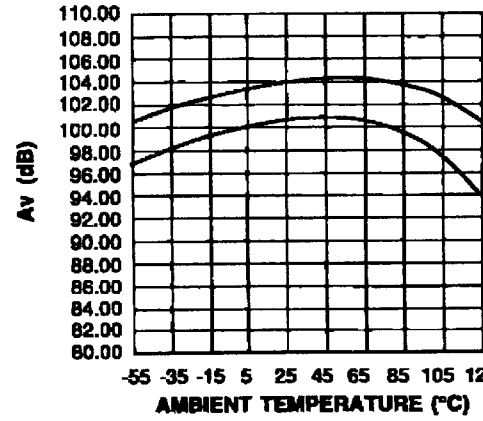

741-17 EPS

GAIN BANDWIDTH PRODUCT vs AMBIENT TEMPERATURE

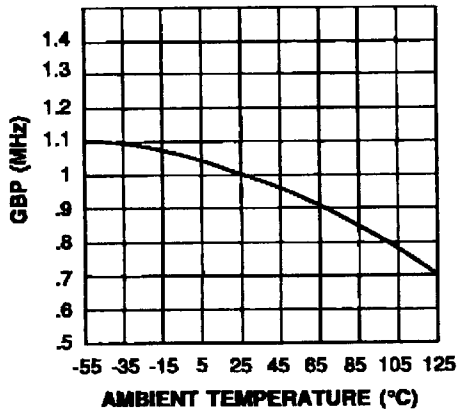

741-18 EPS

POWER SUPPLY & COMMON MODE REJECTION RATIO vs AMBIENT TEMPERATURE

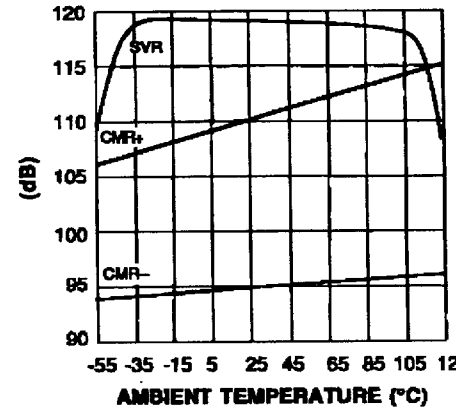

741-19 EPS

INPUT BIAS CURRENT vs AMBIENT TEMPERATURE

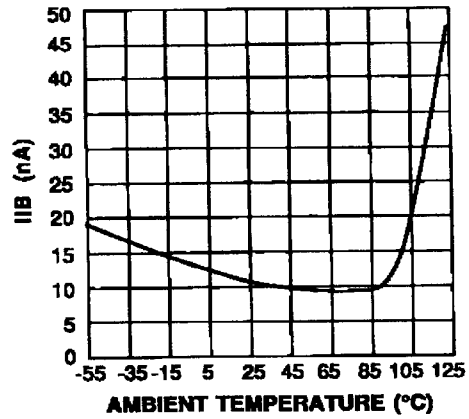

741-20 EPS

7929237 0076604 449

Powered by ICminer.com Electronic-Library Service CopyRight 2003

MEASUREMENT DIAGRAMS

OFFSET VOLTAGE NULL CIRCUIT

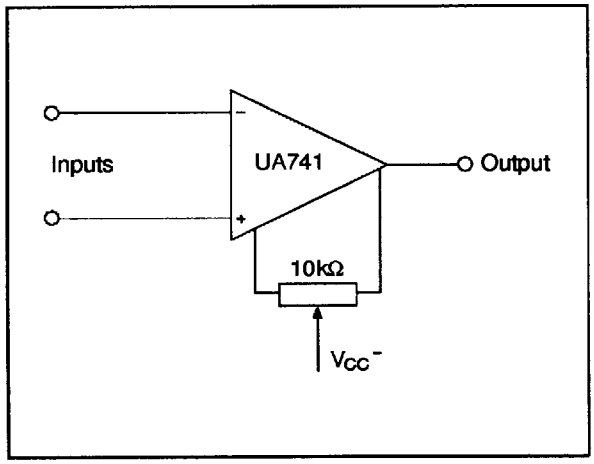

TRANSIENT RESPONSE TEST CIRCUIT

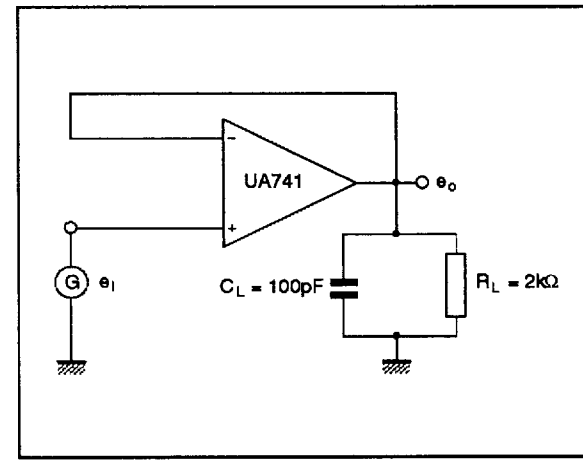

CURRENT TO VOLTAGE CONVERTER

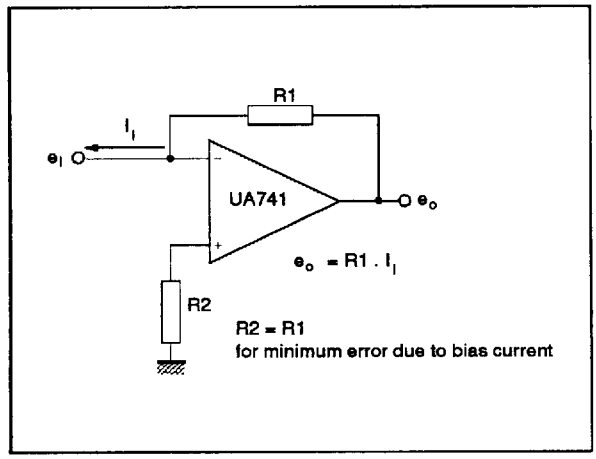

NEUTRALIZING INPUT CAPACITANCE TO OPTIMIZE RESPONSE TIME

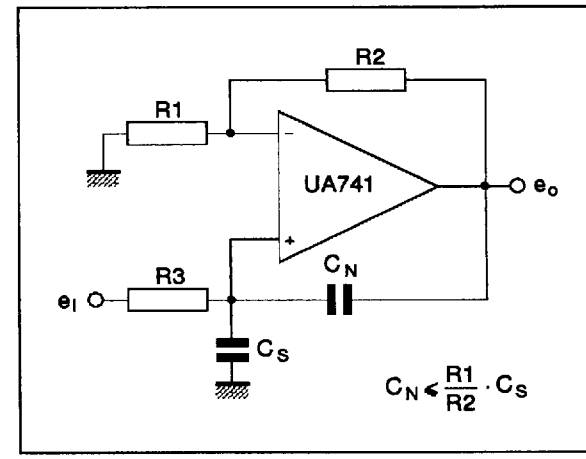

POSITIVE VOLTAGE REFERENCE

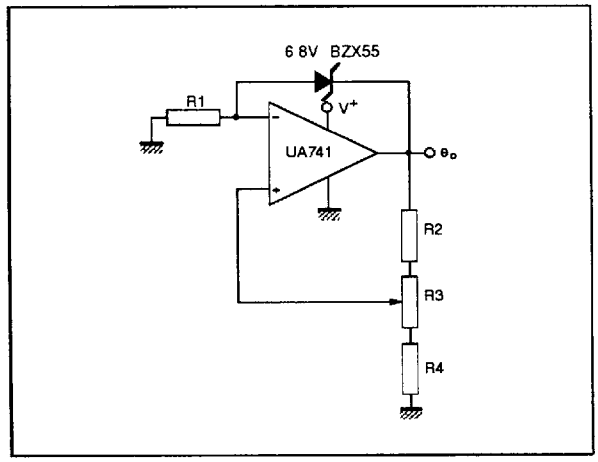

NEGATIVE VOLTAGE REFERENCE

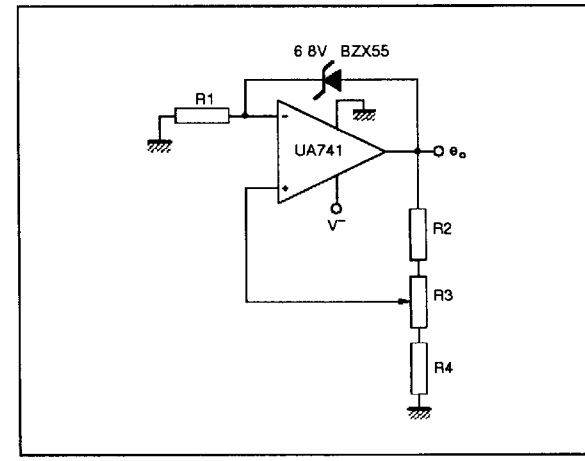

7929237 0076605 385

Powered by ICminer.com Electronic-Library Service CopyRight 2003

PACKAGE MECHANICAL DATA
8 PINS - PLASTIC DIP OR CERDIP

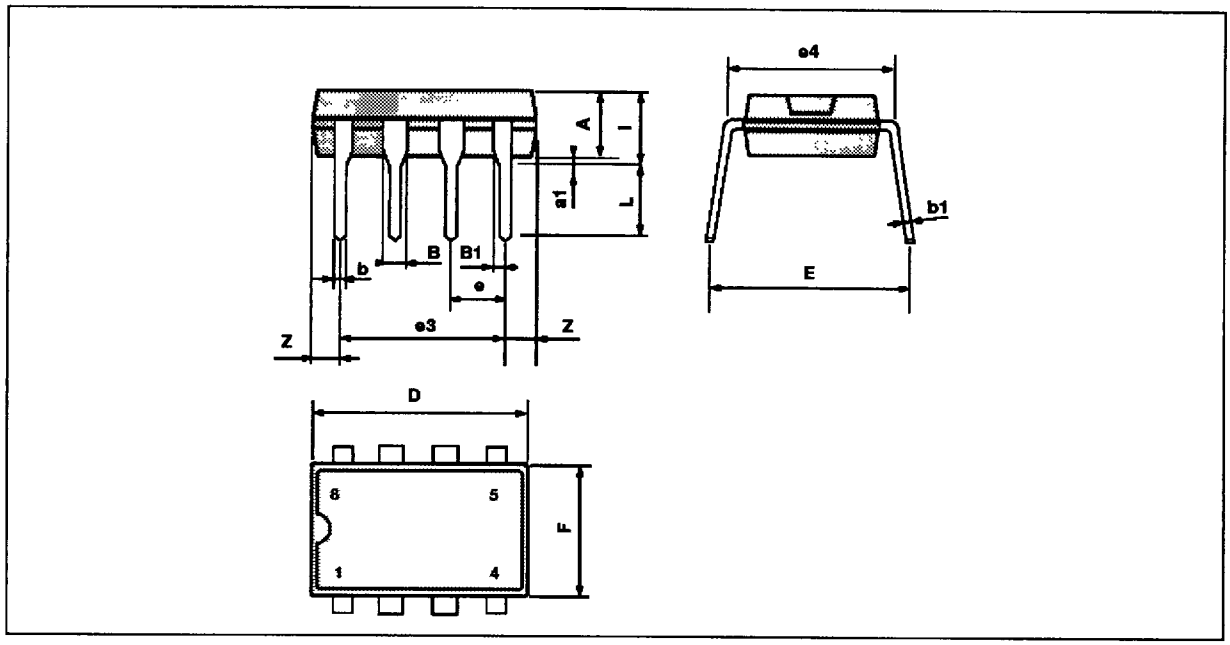

Dimensions	Millimeters			Inches		
	Min.	Typ.	Max.	Min.	Typ.	Max.
A		3.32			0.131	
a1	0.51			0.020		
B	1.15		1.65	0.045		0.065
b	0.356		0.55	0.014		0.022
b1	0.204		0.304	0.008		0.012
D			10.92			0.430
E	7.95		9.75	0.313		0.384
e		2.54			0.100	
e3		7.62			0.300	
e4		7.62			0.300	
F			6.6			0260
i			5.08			0.200
L	3.18		3.81	0.125		0.150
Z			1.52			0.060

DIP8 TBL

7929237 0076606 211

Powered by ICminer.com Electronic-Library Service CopyRight 2003

PACKAGE MECHANICAL DATA
8 PINS - PLASTIC MICROPACKAGE (SO)

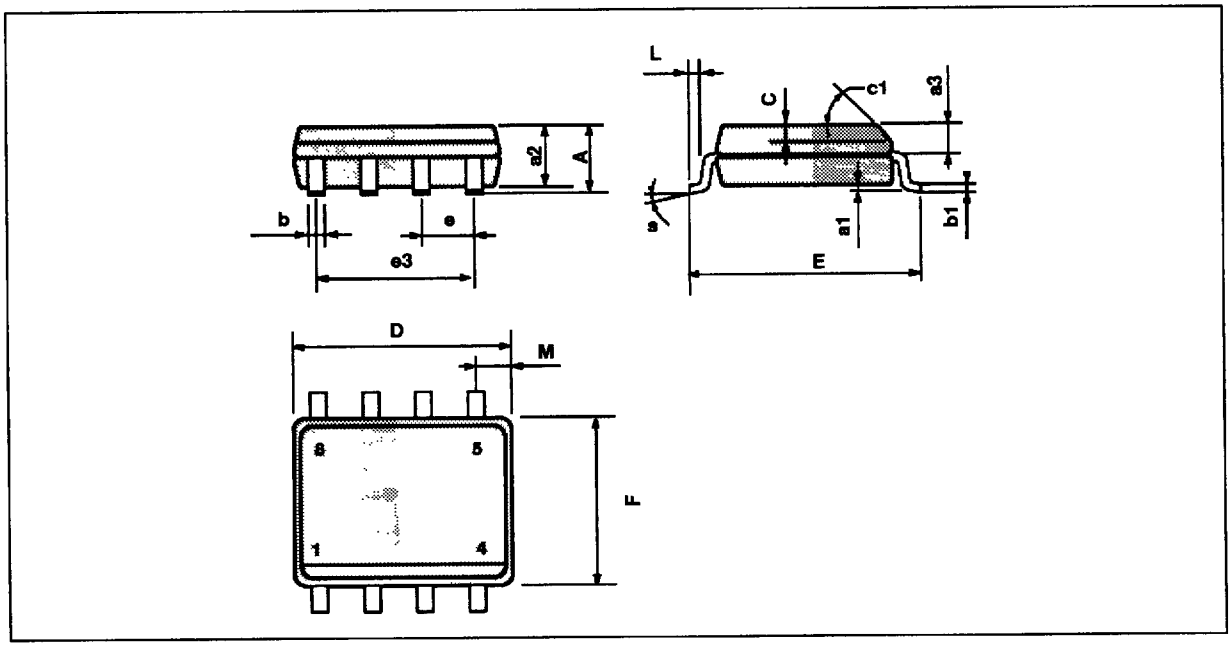

PM-SO8 EPS

Dimensions	Millimeters			Inches		
	Min.	Typ.	Max.	Min.	Typ.	Max.
A			1.75			0.069
a1	0.1		0.25	0.004		0.010
a2			1.65			0.065
a3	0.65		0.85	0.026		0.033
b	0.35		0.48	0.014		0.019
b1	0.19		0.25	0.007		0.010
C	0.25		0.5	0.010		0.020
c1	45° (typ.)					
D	4.8		5.0	0.189		0.197
E	5.8		6.2	0.228		0.244
e		1.27			0.050	
e3		3.81			0.150	
F	3.8		4.0	0.150		0.157
L	0.4		1.27	0.016		0.050
M			0.6			0.024
S	8° (max.)					

SO8 TBL

Information furnished is believed to be accurate and reliable. However, SGS-THOMSON Microelectronics assumes no responsibility for the consequences of use of such information nor for any infringement of patents or other rights of third parties which may result from its use. No licence is granted by implication or otherwise under any patent or patent rights of SGS-THOMSON Microelectronics. Specifications mentioned in this publication are subject to change without notice. This publication supersedes and replaces all information previously supplied. SGS-THOMSON Microelectronics products are not authorized for use as critical components in life support devices or systems without express written approval of SGS-THOMSON Microelectronics.

© 1995 SGS-THOMSON Microelectronics - All Rights Reserved

SGS-THOMSON Microelectronics GROUP OF COMPANIES
Australia - Brazil - France - Germany - Hong Kong - Italy - Japan - Korea - Malaysia - Malta - Morocco - The Netherlands
Singapore - Spain - Sweden - Switzerland - Taiwan - Thailand - United Kingdom - U.S.A.

ORDER CODE

7929237 0076607 158

Powered by ICminer.com Electronic-Library Service CopyRight 2003