# PROGRAMMABLE TELEPHONE SPEECH CIRCUIT

## DESCRIPTION

The LS588 is a monolithic integrated circuit in 16 lead dual in-line plastic package. Designed as a replacement for the hybrid circuit in telephone sets it performs all the functions previously carried out by this circuit.

With the LS588 it is possible to select the operating mode (fixed or variable gain). The device works with both piezoceramic and dynamic transducers and therefore its gain, both in sending and receiving paths, can be present by means of two external resistors. This feature can also be obtained in AGC operating mode, when the device automatically adjusts the Rx/Tx gains to compensate for the line attenuation by sensing the line current.

The LS588 can supply the decoupling FET when working with an electret microphone. Output impedance can be matched to the line independently of transducer impedance.

In addition, the LS588 can be set in power down state, where the device displays a strow decrease of the current consumption (about 8 mA), still maintains DC and AC impedances to the line (for parallel operation with a DTMF generator).

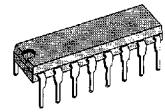

**DIP16**

**ORDERING NUMBER** : LS588N1

## PIN CONNECTION (top view)

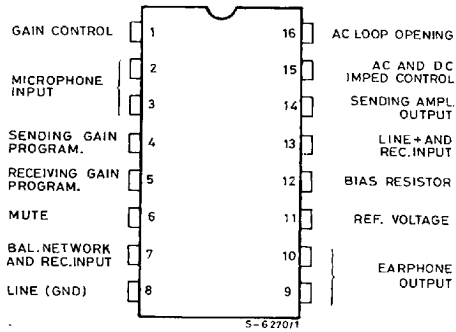

## ABSOLUTE MAXIMUM RATINGS

| Symbol | Parameter | Value | Unit |
|---|---|---|---|
| $V_L$ | Line Voltage (3 ms pulse duration) | 22 | V |
| $I_L$ | Forward Line Current | 150 | mA |
| $I_L$ | Reverse Line Current | – 150 | mA |
| $P_{tot}$ | Total Power Dissipation at $T_{amb}$ = 70 °C | 1 | W |
| $T_{op}$ | Operating Temperature | – 45 to + 70 | °C |
| $T_{stg}$, $T_j$ | Storage and Junction Temperature | – 65 to + 150 | °C |

## THERMAL DATA

| Symbol | Parameter | | Value | Unit |
|---|---|---|---|---|
| $R_{th\ j\text{-}amb}$ | Thermal Resistance Junction–ambient | Max | 80 | °C/W |

## BLOCK DIAGRAM

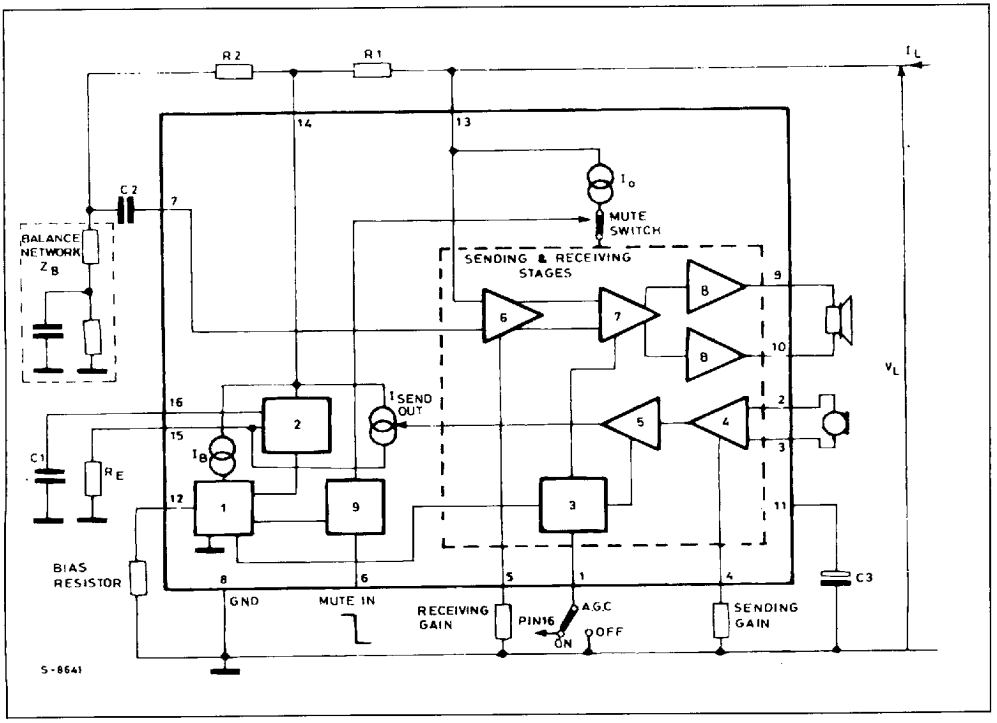

## TEST CIRCUITS

**Figure 1.**

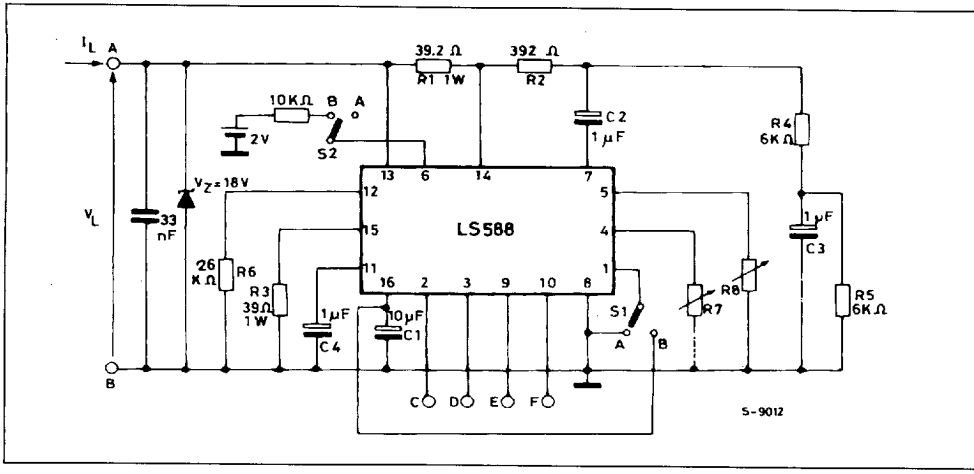


**Figure 2.**

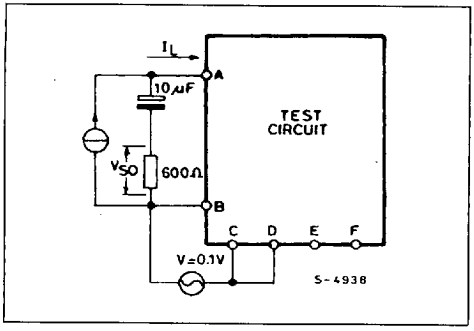


**Figure 3.**

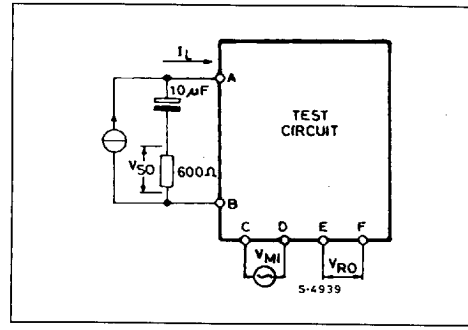


**Figure 4.**

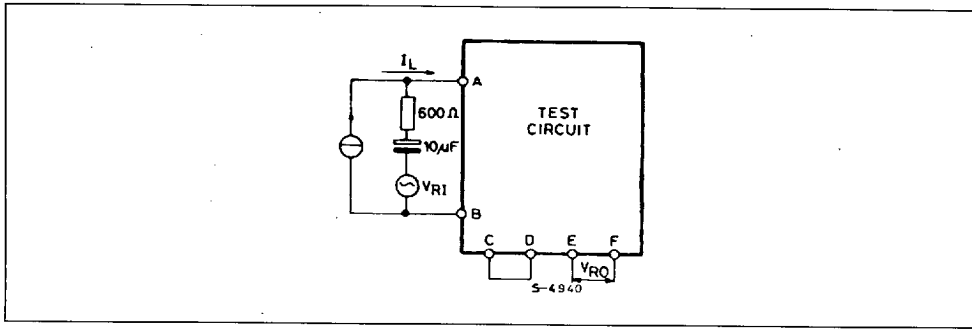

**ELECTRICAL CHARACTERISTICS** (Refer to test circuits, $T_{amb}$ = - 25 to + 50°C, f = 200 to 3400Hz, $I_L$ = 15 to 100mA, $R_7$ = 17.3kΩ, $R_8$ = 17.1kΩ, S1 in A, S2 in A, unless otherwise specified)

| Symbol | Parameter | Test Conditions | Min. | Typ. | Max. | Unit | Fig. |
|---|---|---|---|---|---|---|---|
| A.G.C. On | | | | | | | |
| $V_L$ | Line Voltage | $T_{amb}$ = 25°C<br>$I_L$ = 15mA<br>$I_L$ = 25mA<br>$I_L$ = 50mA<br>$I_L$ = 120mA | 4.1 | 4.5<br>5.2<br>7 | 4.9<br>5.6<br>7.8<br>14 | V | 1 |
| CMR | Common Mode Rejection | f = 1kHz | 50 | | | dB | 2 |
| $G_s$ | Sending Gain | $I_L$ = 50mA, f = 1kHz<br>$T_{amb}$ = 25°C, $V_{MI}$ = 2mV<br>$R_7$ = 17.3kΩ<br>$R_7$ = 22.0kΩ | 39.0<br>43.8 | | 41.0<br>46.2 | dB | 3 |
| $\Delta G_s$ | Sending Gain Variation versus Current | $I_{ref}$ = 50mA, $T_{amb}$ = 25°C | – 0.5 | | + 0.5 | dB | 3 |
| | Sending Gain Variation versus Current (S1 in B) | $I_{ref}$ = 50mA, $T_{amb}$ = 25°C<br>$I_L$ = 25mA<br>$I_L$ = 100mA | 4.0<br>– 2.0 | | 6<br>0 | dB | 3 |
| | Sending Gain Variation versus Frequency | $f_{ref}$ = 1kHz | – 0.5 | | 0.5 | dB | 3 |
| $THD_s$ | Sending Distortion | f = 1kHz<br>$I_L$ = 15 to 25mA, $V_{so}$ = 450mV<br>$I_L$ = 25 to 100mA, $V_{so}$ = 1.6V | | | 2<br>5 | % | 3 |
| $N_s$ | Sending Noise | $V_{MI}$ = 0mV | | – 74 | | dBm | 3 |
| $Z_{MI}$ | Microphone Impedance | $V_{MI}$ = 3mV | 11 | 15 | | kΩ | 3 |
| $G_R$ | Receiving Gain | $I_L$ = 50mA, f = 1kHz<br>$T_{amb}$ = 25°C, $V_{RI}$ = 570mV<br>$R_8$ = 17.1kΩ<br>$R_8$ = 14.7kΩ | 2.3<br>– 0.1 | | 4.7<br>1.9 | dB | 4 |
| $\Delta G_R$ | Receiving Gain Variation versus Current | $I_{ref}$ = 50 mA, $T_{amb}$ = 25 °C | – 0.5 | | + 0.5 | dB | 4 |
| | Receiving Gain Variation versus Current (S1 in B) | $I_{ref}$ = 50 mA, $T_{amb}$ = 25 °C<br>$I_L$ = 25mA<br>$I_L$ = 100mA | 4.0<br>– 2.0 | | 6<br>0 | dB | 4 |
| | Receiving Gain Variation versus Frequency | $f_{ref}$ = 1 kHz | – 0.5 | | 0.5 | dB | 4 |
| $THD_R$ | Receiving Distortion | $V_{RI}$ = 570 mV | | | 2 | | |
| | | $V_{RI}$ = 775 mV | | | 5 | % | 4 |
| $N_R$ | Receiving Noise | $V_{RI}$ = 0 mV | | 150 | | µV | 4 |
| $Z_{RO}$ | Receiving Output Impedance | $V_{RO}$ = 50mV | | 50 | | Ω | 4 |
| | Sidetone | f = 1kHz | | 15 | | dB | 3 |
| $Z_{ML}$ | Line Matching Impedance | $V_{RI}$ = 0.3V, f = 1kHz | 650 | | 850 | Ω | 4 |
| | Max Receiving Output (click suppression) | $V_{RI}$ = 2V | 3.9 | 4.4 | | $V_{PP}$ | 4 |
| $V_{SM}$ | Microphone Supply | $R_{load}$ = 2.2 kΩ | 1.9 | | 2.2 | V | 1 |
| MUTE OPERATION | | | | | | | |
| | Mute Threshold Voltage (pin 6) | Speech Condition<br>Mute Condition | 1.5 | | 0.8 | V<br>V | –<br>– |
| | Muting Operation Current (pin 6) (S2 in B) | | 50 | | | µA | – |
| | Line Dynamic in Mute Condition (S2 in B) THD = 2 % | $I_L$ = 3.5 mA<br>$I_L$ = 4 mA | 600<br>850 | | | mV<br>mV | –<br>– |
| | Line Voltage in Mute Condition (S2 in B) | $I_L$ = 3.5 mA<br>$I_L$ = 4 mA | | 3.6<br>4.2 | | V<br>V | –<br>– |

## CIRCUIT DESCRIPTION

1. DC Characteristic

In accordance with CCITT recommendations, any device connected to a telephone line must exhibit a proper DC characteristic $V_L$, $I_L$.
The DC characteristics of the LS588 is determined by the shunt regulator (block 2) together with two series resistors $R_1$ and $R_3$ (see the block diagram). The equivalent circuit is shown in fig. 5.
A fixed amount, $I_o$, of the total available current, $I_L$, is drained to allow the circuit to operate correctly. The value of $I_o$ can be programmed externally by changing the value of the bias resistor connected to pin 12.
The recommended minimum value of $I_o$ is 7.5mA with R pin 12 = 26kΩ.
The voltage $V_o \cong 3.8$ V of the shunt regulator is independent of the line current.
The shunt regulator (block 2) is controlled by a temperature compensated voltage reference (block 1). Fig. 6 shows a more detailed circuit configuration of the shunt regulator.
The difference $I_L$-$I_o$ flows through the shunt regulator since $I_b$ is negligible.
$I_a$ is an internal constant current generator ; hence $V_o = V_B + I_a \cdot R_a = 3.8V$.
The $V_L$, $I_L$ characteristic of the device is therefore similar to a pure resistance in series with a battery. It is important to note that the DC voltage at pin 16 is proportional to the line current $V_{16} = V_{15} + V_B = (I_L - I_o)\, R_3 + V_B$.

**Figure 5** : Equivalent DC Load to the Line.

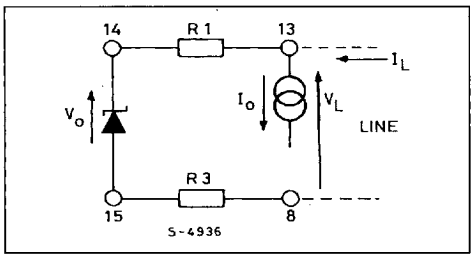


### 2. Two To Four Wires Conversion

The LS588 performs the two wire (line) to four wire (microphone, earphone) conversion by means of a Wheatstone bridge configuration thus obtaining the proper decoupling between sending and receiving signals (see fig. 7).

For a perfect balancing of the bridge $\frac{Z_L}{Z_B} = \frac{R_1}{R_2}$.

The AC signal from the microphone is sent to one diagonal of the bridge (pin 8 and 14). A small percentage of the signal power is lost on $Z_B$ (since $Z_B >> Z_L$) ; the main part is sent to the line via $R_1$.
In receiving mode, the AC signal coming from the line is sensed across the second diagonal of the bridge (pin 7 and 13). After amplification it is applied to the receiving capsule.
The impedance $Z_M$ is simulated by the shunt regulator which also acts as a transconductance amplifier for the transmission signal.

The impedance $Z_M$ is defined as $\frac{\Delta V_{(14-8)}}{\Delta I_{(14-8)}}$

From fig. 6, considering $C_1$ as a short circuit to the AC signal, any variation in $V_{14}$ generates a variation as follows :

$$V_{15} = V_A = V_{14} \frac{R_b}{R_a + R_b}$$

the corresponding current change is :

$$\Delta I = \frac{\Delta V_{15}}{R_3}$$

therefore

$$Z_M = \frac{\Delta V_{14}}{\Delta I} = R_3 \left(1 + \frac{R_a}{R_b}\right)$$

The total impedance across the line connections (pin 13 and 8) is given by

$$Z_{ML} = R_1 + Z_M \,//\, (R_2 + Z_B)$$

By choosing $Z_M$ $R_1$ and $Z_B$ $Z_M$

$$Z_{ML} \cong Z_M = R_3 \left(1 + \frac{R_a}{R_b}\right)$$

The amplitude of the signal received across pins 13 and 7 can be changed using different values of $R_1$ (of course the relationship $\frac{Z_L}{Z_B} = \frac{R_1}{R_2}$ must always be valid).

The received signal is related to the value of $R_1$ according to the approximated relationship :

$$V_R = V_{RI}\, 2 \frac{R_1}{R_1 + Z_M}$$

Note that if the value of $R_1$ is changed the transmission signal current is not changed, since the microphone amplifier is a transconductance amplifier.

### 3. Input and Output Amplifiers

The microphone amplifier (4) has a differential input stage with high impedance (min 11 K) so allowing a good matching to the microphone by means of an external resistor without affecting the sending gain.

The receiving output stage (8) is intended to drive both piezoceramic and dynamic capsules. It has low

output impedance, a maximum voltage swing greater than 2 $V_p$ and a peak current of 2 mA.

With very low impedance transducers, DC decoupling by an external capacitor must be provided to prevent a large DC current flow across the transducer itself due to the receiving output stage offset.

### 4. Gain Control

It is possible to set the LS588 gain characteristics by means of one pin (pin 1).

When the pin 1 is grounded, the gains of the sending and receiving amplifiers do not depend on the line current (AGC off). When the pin 1 is connected to pin 15 the LS588 automatically changes the gain to compensate for line attenuation (AGC on).

4.1. AGC OFF
In this conditions, as already mentioned, both the sending and the receiving gain are fixed. Their values are determined, independently for the two paths, by the two external resistors $R_7$ (for $T_x$, between pin 4 and ground) and $R_8$ (for $R_x$, between pin 5 and ground), in a wide range (see fig. 8 and 9).

4.2. AGC ON
Starting from any couple of gain values, fixed by the appropriate values of $R_7$ and $R_8$, the LS588 can automatically change the sending and receiving gains depending on the line current.
The line current is sensed across $R_3$ (see fig. 7) and transferred to pin 16 by the regulator.

$$V_{16} = V_B + V_{15} = V_B + (I_L - I_o) \cdot R_3$$

Following comparison with an internal reference (block 1) the voltage at pin 1 is used to modify (block 3) the gain of the amplifiers (5) and (7) on both the sending and receiving paths.

The starting point of the automatic level control is obtained at $I_L$ = 25mA when the drain current $I_o$ = 7.5mA.

The external resistors $R_7$ and $R_8$ fix the maximum value for the gains.

Minimum gain is reached for a line current of about 100mA when the same drain current $I_o$ of 7.5mA is used.

### 5. DC Shunt Regulator

The LS588 has built into the chip a DC shunt regulator intended to supply (pin 11) the coupling FET when an electret microphone is used. It delivers 1 mAp current with a voltage of 2 Volts (typ) regardless of the line current.

### 6. Mute Condition and Mutifrequency Interfacing

- A logical control (mute) at pin 6 allows operation in parallel with a proper DTMF generator connectable to the line.
- When pin 6 is set high (more than 1.8 Volt) the mute logic circuit (block 9) switches off both sending and receiving stages (mute switch) and reduces (1) the bias current, to sabe about 10 mA, available for the paralleled DTMF generator.

In this condition the LS588 still shows to the line the specified AC impedance (650 to 850 Ω) not provided by the DTMF generator which acts as a current generator.

### 7. Anticlipping Application

It is possible to avoid distortion of the sending signal limiting the sending gain with an external control at pin 4 (gain programming).

The maximum level to the line will be :

$$V_S = \frac{0.6V}{\sqrt{2}} \times \frac{R_{AC1} + R_{AC2}}{R_{AC2}}$$

The following table can be helpful to the designer when choosing different values for the external components, it refers to the typical application circuit of fig. 10.

**Figure 6** : Circuit Configuration of the Shunt Regulator.

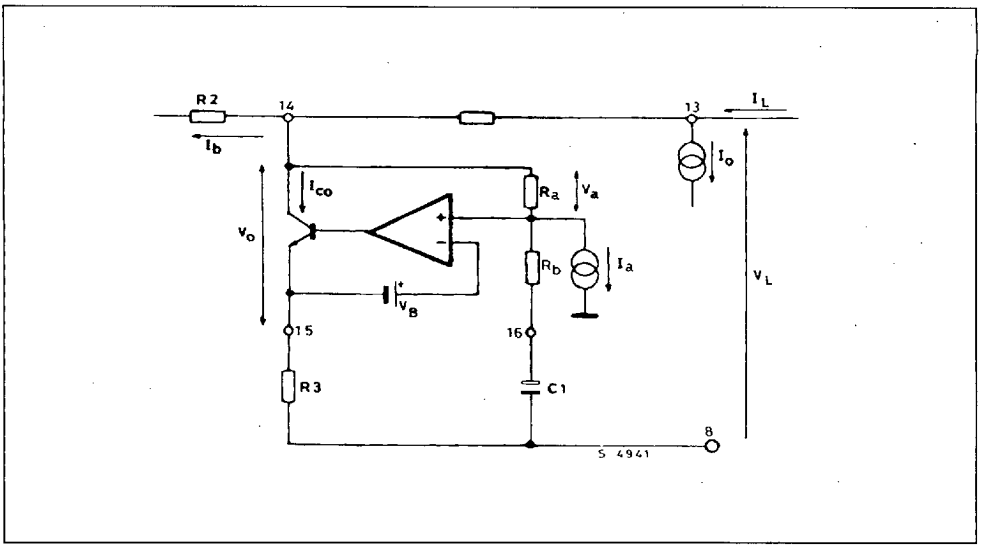


**Figure 7** : Two to four Wires Conversion.

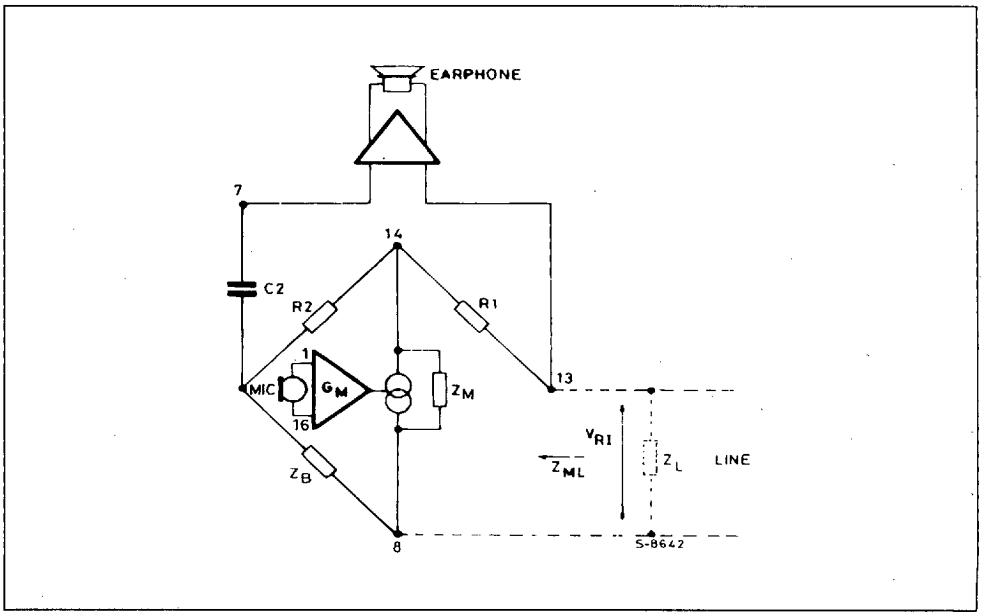

**Figure 8** : Sending Gain vs. $R_7$ Value (AGC OFF).

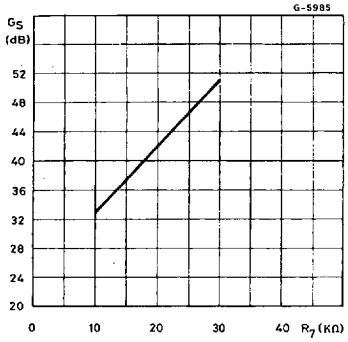


**Figure 9** : Receiving Gain vs. $R_8$ Value (AGC OFF).

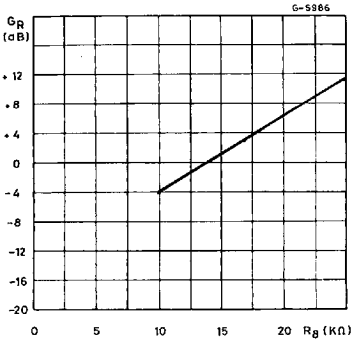


**Figure 10** : Typical Application Circuit (piezoceramic transducers).

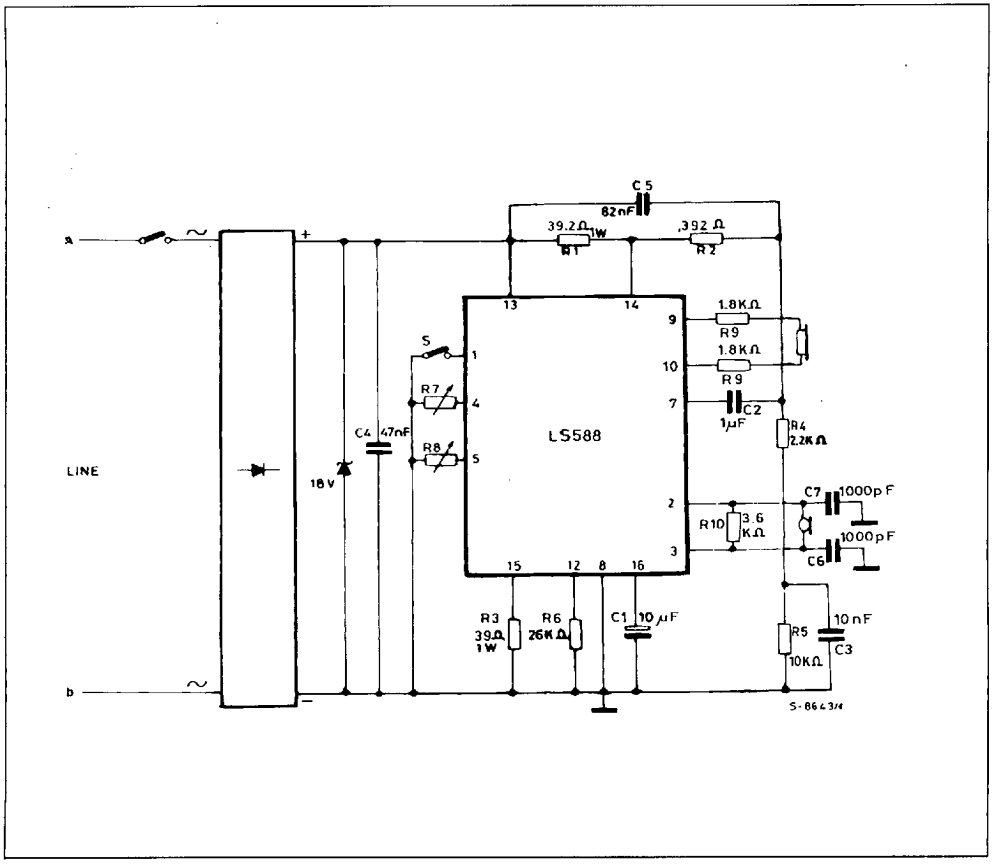

**Figure 11** : Anticlipping Application.

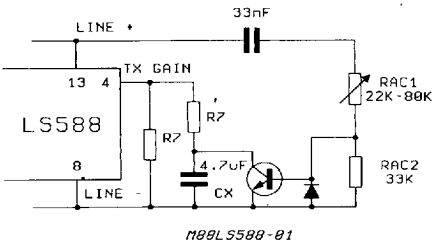


## APPLICATION INFORMATION

**Figure 12** : Application Circuit with Electret Microphone.