SGS-THOMSON MICROELECTRONICS

L9307
L9309

DUAL HIGH CURRENT LOW SIDE DRIVER

- HIGH OUTPUT CURRENT
- INPUT COMPARATOR WITH WIDE RANGE COMMON MODE OPERATION AND GROUND COMPATIBLE INPUTS
- INPUT COMPARATOR HYSTERESIS
- SHORT CIRCUIT PROTECTION WITH SOA PROTECTION OF OUTPUT
- INTERNAL THERMAL PROTECTION WITH HYSTERESIS
- SINGLE SUPPLY VOLTAGE (3.5 V to 28V)

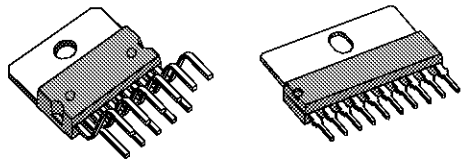

Multiwatt 11 **SIP 10**

ORDERING NUMBERS:

L9307 L9309

DESCRIPTION

The L9307/9 is a monolithic integrated circuit with differential input comparator and open collector output able to sink high current specially to drive relays, lamps, d.c. motors.

Particular care has been taken to protect the device against destructive failures, i.c. short circuit of outputs to V_S, SOA protection, supply overvoltage.

A built in thermal shut-down switches off the device when the IC's internal dissipation becomes too high and the chip temperature exceeds security threshold.

The input comparator hysteresis increases the interface's noise immunity allowing the correct use critical environments as automotive applications.

BLOCK DIAGRAM

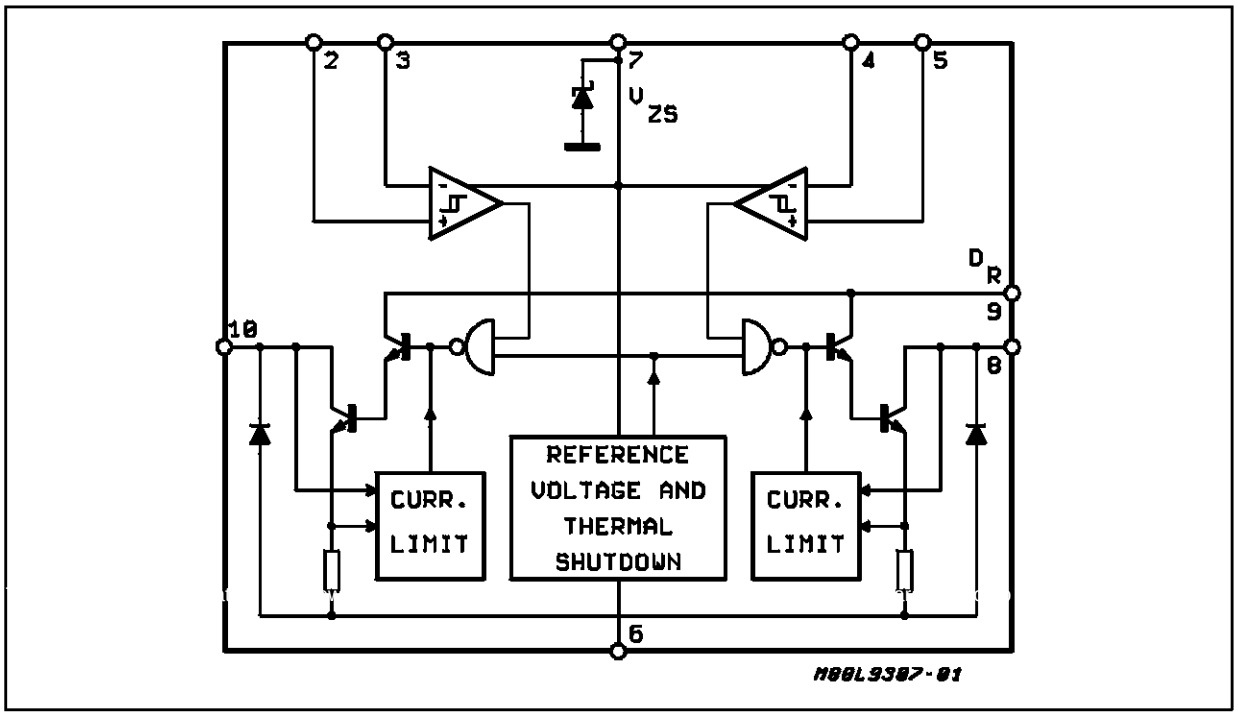

ABSOLUTE MAXIMUM RATINGS

Symbol	Parameter	Value	Unit
I_{ZS}	Current Into Supply Clamp Zener Diode DC Conditions Pulsed: Ton < 2.5ms; d < 8%	30 80	mA mA
V_S	Supply Voltage	28	V
I_O	Output Current	Internally Limited	°C
T_j, T_{stg}	Junction and Storage Temperature Range	– 55 to 150	°C
V_O 1,2	Output Voltage	– 0.3 to 28	V
P_{tot}	Power Dissipation at T_{amb} = 85°C **for Multiwatt 11** **for SIP 10**	1.7 1.3	W W

(*) T_{ON} 2.5ms; repetition time ≤ 30ms
(**) The maximum allowed supply voltage without limiting resistor is limited by the built-in protection zener diode: see V_{ZS} spec. values if V_S higher than V_{ZS} a resistor R_S is necessary to limit the zener current I_{ZS}.

PIN CONNECTIONS (Top view)

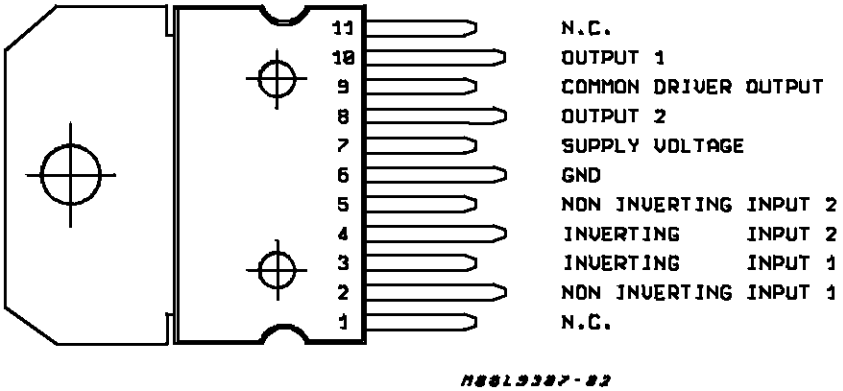

MULTIWATT 11

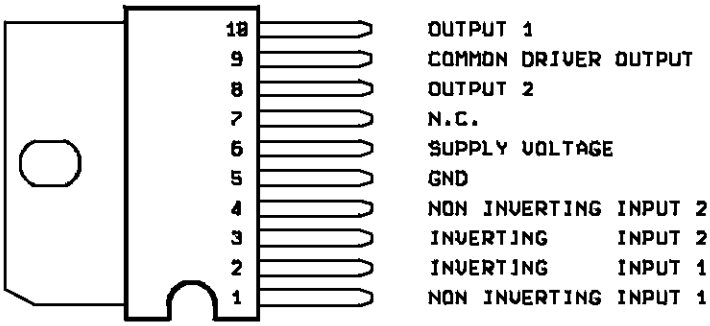

SIP 10

THERMAL DATA

Symbol	Parameter		Multiwatt	SIP	Unit
$R_{th\ j\text{-}amb}$	Thermal Resistance Junction-ambient	Max.	38	50	°C/W
$R_{th\ j\text{-}case}$	Thermal Resistance Junction-case	Max.	3	10	°C/W

Figure 1: Typical Application (for SIP 10 version)

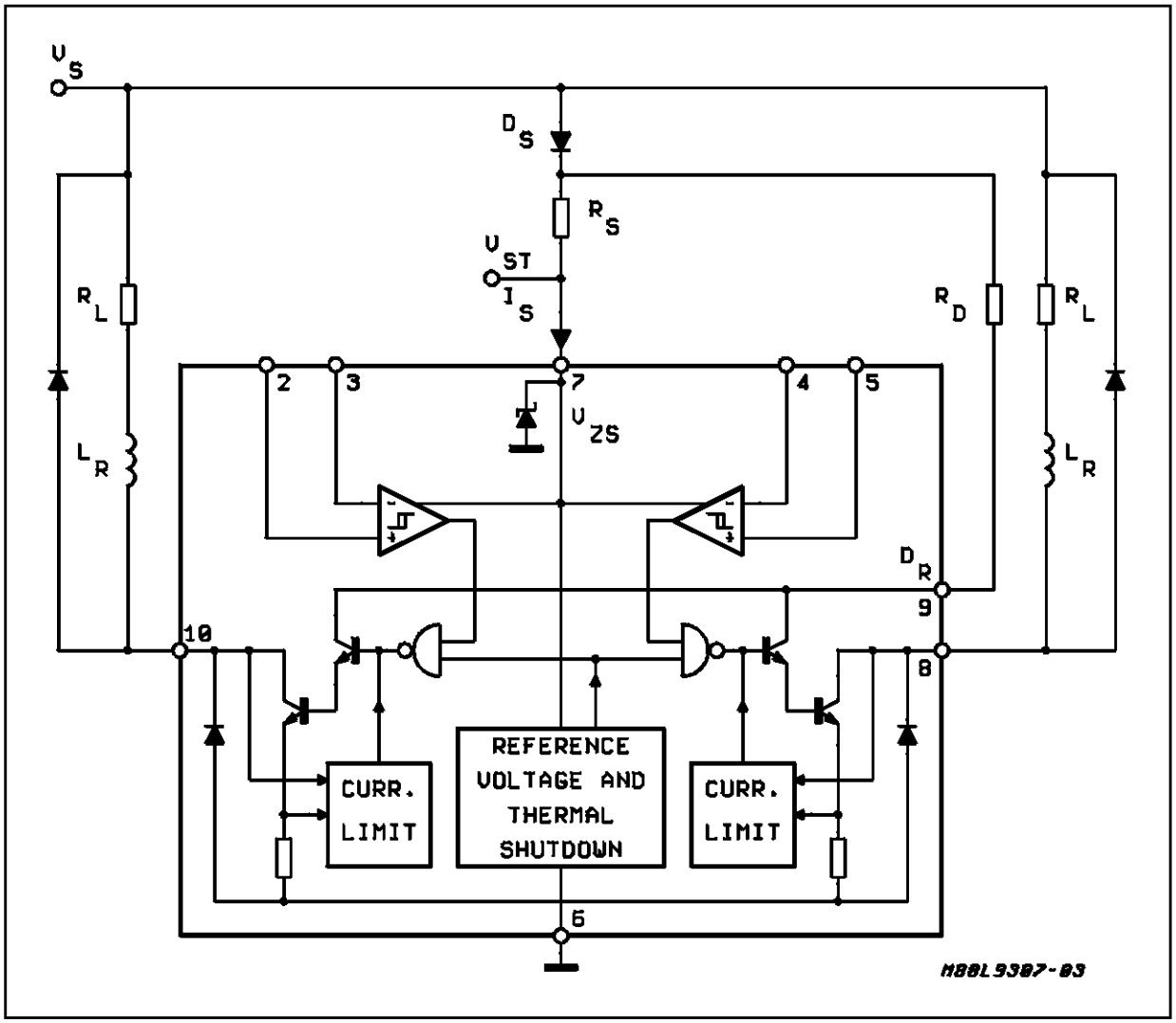

Note: a) RS required only limit I_{ZS} whenever V_S exceeds V_{ZS} voltage value.

ELECTRICAL CHARACTERISTICS (V_S = 14.4V; Tamb = –40°C to 85°C; R_S = 100Ω Refer to the block diagram, unless otherwise specified.)

Symbol	Parameter	Test Condition	Min.	Typ.	Max.	Unit
V_{IH}	Hysteresis of the Input Comparator	Vin = 200mVpp; f = 1KHz	20		80	mV
I_B	Input Bias Current			0.2	1	µA
I_{OS}	Input Offset Current			± 50	± 400	nA
CMR	Input Common Mode Range	V_S = 6 to 18V	0		V_{ST} -1.6	V
I_{SC}	Output Short Circuit Channel (typ. SOA curve, see fig.2)	$V_I^- – V_I^+$ > 70mA V_{out} 1, 2 = 16V T_{amb} = 25 to 85°C T_{amb} = –40 to 25°C V_{out} 1,2 = 6V			 0.8 0.9 2.5	 A A A
I_D	Driver Transistor Current Capability	$V_I^- – V_I^+$ > 70mA V_S = 6 – 16V DC Conditions Pulsed: T_{on} = 2.5ms; d < 8%			 300 600	 mA mA
I_O 1, 2	Output Current for Each Channel	(see fig. 2) Vout 1, 2 < 2V; $V_I^- – V_I^+$ > 70mV I_d = 100mA	1.5			A
V_{Csat}	On Status Saturation Voltage	$V_I^- – V_I^+$ > 70mV I_d = 100mA I_{out} 1, 2 = 1.2A			1.2	V
I_{OL}	Output Leakage Current	$V_I^+ – V_I^-$ > 70mV V_S = 18V		10	250	µA
V_{st}	Supply Voltage (pin 7)		3.5		18	V
I "st.by"	Supply Current	$V_I^+ – V_I^-$ > 70mV		5	8	mA
I "ON"	Supply Current	$V_I^+ – V_I^-$ > 70mV		18		mA
V_{ZS}	Voltage Clamp Supply Protection	I_{ZS} = 10mA	20		27	V

Figure 2: SOA Protection.

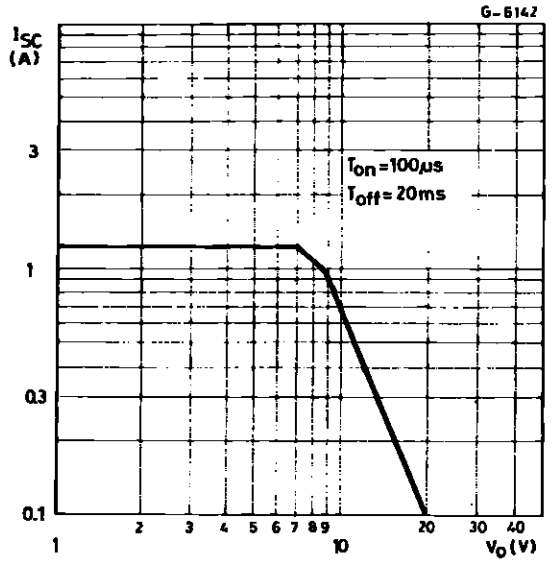

MULTIWATT11 PACKAGE MECHANICAL DATA

DIM.	mm			inch		
	MIN.	TYP.	MAX.	MIN.	TYP.	MAX.
A			5			0.197
B			2.65			0.104
C			1.6			0.063
D		1			0.039	
E	0.49		0.55	0.019		0.022
F	0.88		0.95	0.035		0.037
G	1.57	1.7	1.83	0.062	0.067	0.072
G1	16.87	17	17.13	0.664	0.669	0.674
H1	19.6			0.772		
H2			20.2			0.795
L	21.5		22.3	0.846		0.878
L1	21.4		22.2	0.843		0.874
L2	17.4		18.1	0.685		0.713
L3	17.25	17.5	17.75	0.679	0.689	0.699
L4	10.3	10.7	10.9	0.406	0.421	0.429
L7	2.65		2.9	0.104		0.114
M	4.1	4.3	4.5	0.161	0.169	0.177
M1	4.88	5.08	5.3	0.192	0.200	0.209
S	1.9		2.6	0.075		0.102
S1	1.9		2.6	0.075		0.102
Dia1	3.65		3.85	0.144		0.152

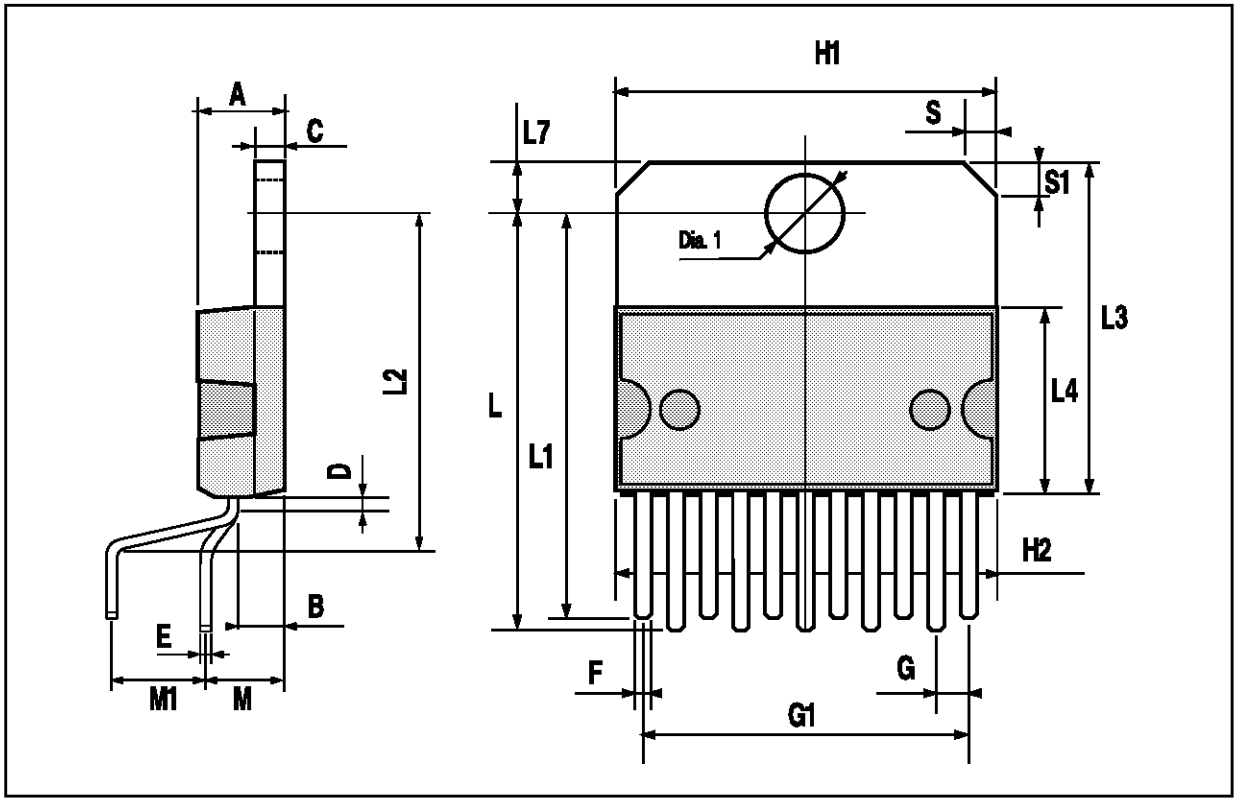

SIP10 PACKAGE MECHANICAL DATA

DIM.	mm			inch		
	MIN.	TYP.	MAX.	MIN.	TYP.	MAX.
A			7.1			0.280
a1	2.7		3	0.106		0.118
B			24.8			0.976
b1		0.5			0.020	
b3	0.85		1.6	0.033		0.063
C		3.3			0.130	
c1		0.43			0.017	
c2		1.32			0.052	
D			23.7			0.933
d1		14.5			0.571	
e		2.54			0.100	
e3		22.86			0.900	
L	3.1			0.122		
L1		3			0.118	
L2		17.6			0.693	
L3			0.25			0.010
L4			0.254			0.010
M		3.2			0.126	
N		1			0.039	
P			0.15			0.006

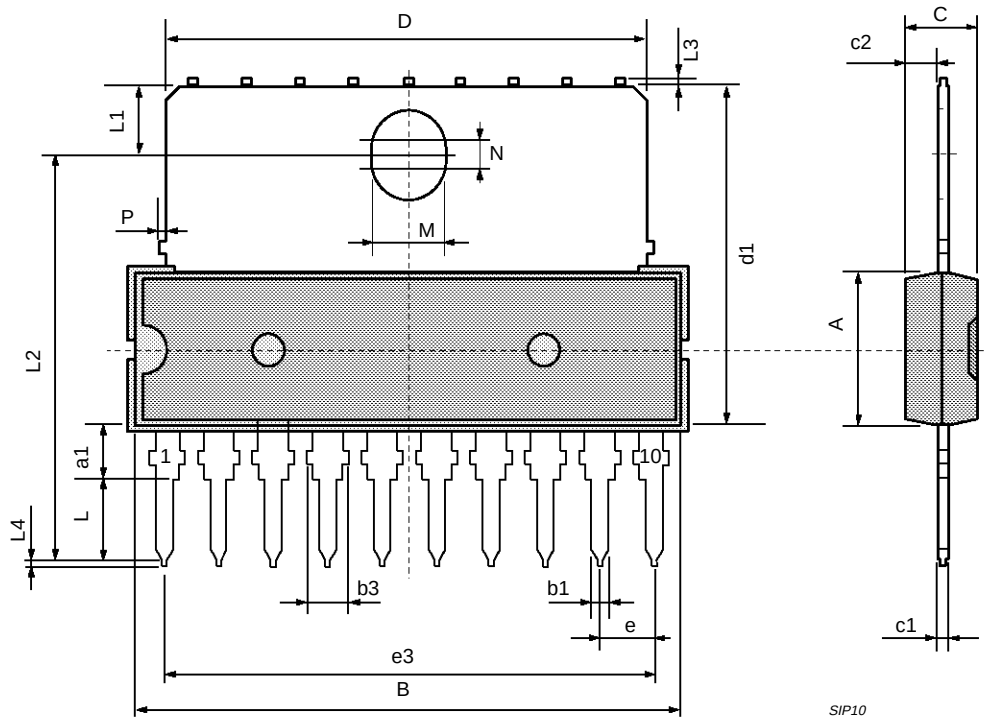

Information furnished is believed to be accurate and reliable. However, SGS-THOMSON Microelectronics assumes no responsibility for the consequences of use of such information nor for any infringement of patents or other rights of third parties which may result from its use. No license is granted by implication or otherwise under any patent or patent rights of SGS-THOMSON Microelectronics. Specifications mentioned in this publication are subject to change without notice. This publication supersedes and replaces all information previously supplied. SGS-THOMSON Microelectronics products are not authorized for use as critical components in life support devices or systems without express written approval of SGS-THOMSON Microelectronics.

© 1994 SGS-THOMSON Microelectronics - All Rights Reserved

SGS-THOMSON Microelectronics GROUP OF COMPANIES

Australia - Brazil - France - Germany - Hong Kong - Italy - Japan - Korea - Malaysia - Malta - Morocco - The Netherlands - Singapore - Spain - Sweden - Switzerland - Taiwan - Thaliand - United Kingdom - U.S.A.