Integrated Device Technology, Inc.

HIGH-SPEED BiCMOS ECL STATIC RAM 1M (256K x 4-BIT) SRAM

PRELIMINARY
IDT10514
IDT100514
IDT101514

FEATURES:

- 262,144-words x 4-bit organization
- Address access time: 10/12/15 ns
- Low power dissipation: 800mW (typ.)
- Guaranteed Output Hold time
- Fully compatible with ECL logic levels
- Separate data input and output
- Standard through-hole and surface mount packages
- Guaranteed-performance die available for MCMs/hybrids

DESCRIPTION:

The IDT10514, IDT100514 and IDT101514 are 1,048,576-bit high-speed BiCMOS ECL Static Random Access Memories organized as 256Kx4, with separate data inputs and outputs. All I/Os are fully compatible with ECL levels.

These devices are part of a family of asynchronous four-bit-wide ECL SRAMs. The devices have been configured to follow the standard ECL SRAM JEDEC pinout. Because they are manufactured in BiCMOS technology, power dissipation is greatly reduced over equivalent bipolar devices. Low power operation provides higher system reliability and makes possible the use of the plastic SOJ package for high-density surface mount assembly.

The fast access time and guaranteed Output Hold time allow greater margin for system timing variation. DataIN setup time specified with respect to the trailing edge of Write Pulse eases write timing allowing balanced Read and Write cycle times.

FUNCTIONAL BLOCK DIAGRAM

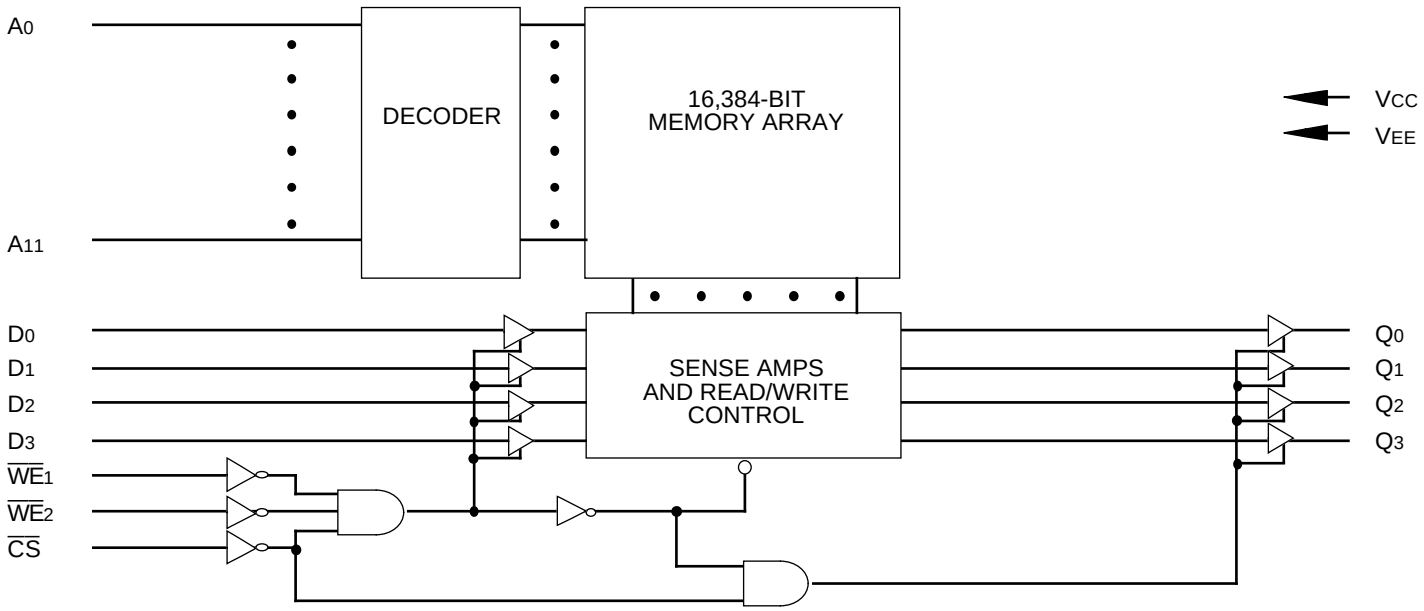

2811 drw 01

PIN CONFIGURATION

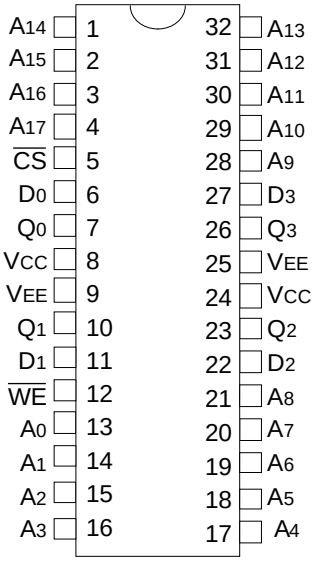

Top View

2786 drw 02

PIN DESCRIPTIONS

Symbol	Pin Name
A_0 through A_{17}	Address Inputs
D_0 through D_3	Data Inputs
Q_0 through Q_3	Data Outputs
$\overline{WE}$	Write Enable Input
$\overline{CS}$	Chip Select Input (Internal pull down)
V_{EE}	More Negative Supply Voltage
V_{CC}	Less Negative Supply Voltage

2786 tbl 01

CAPACITANCE (T_A = +25°C, f = 1.0MHz)

Symbol	Parameter	DIP Typ.	DIP Max.	SOJ Typ.	SOJ Max.	Unit
C_{IN}	Input Capacitance	4	—	3	—	pF
C_{OUT}	Output Capacitance	6	—	3	—	pF

2786 tbl 02

TRUTH TABLE(1)

$\overline{CS}$	$\overline{WE}$	DataOUT	Function
H	X	L	Deselected
L	H	RAM Data	Read
L	L	L	Write

2786 tbl 03

NOTE:
1. H=High, L=Low, X=Don't Care

PACKAGES

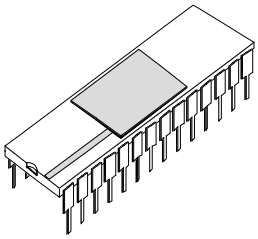

400-Mil-Wde CERAMIC PACKAGE C32-2

2786 drw 03

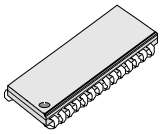

400-Mil-Wide PLASTIC SOJ PACKAGE SO32-3

2786 drw 04b

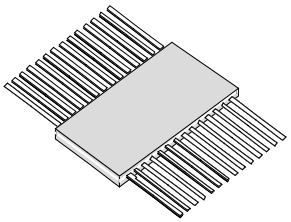

400-Mil-Wde CERPACK E32

2786 drw 04a

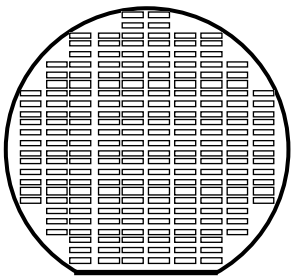

Hi-Rel Die For Hybrid and MCM Applications

2786 drw 05

LOGIC SYMBOL

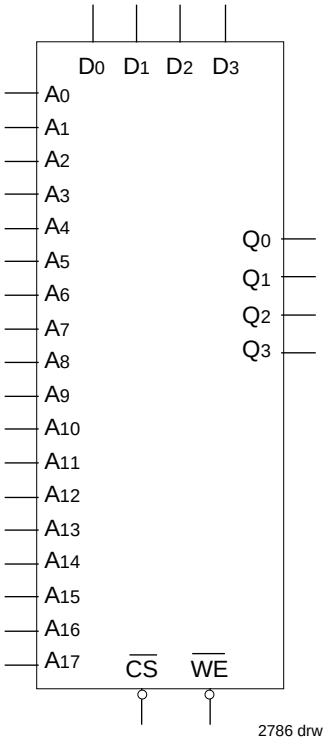

2786 drw 06

ABSOLUTE MAXIMUM RATINGS(1)

Symbol	Rating		Value	Unit
V_{TERM}	Terminal Voltage With Respect to GND		+0.5 to -7.0	V
T_A	Operating Temperature	10K 100K 101K	0 to +75 0 to +85 0 to +75	°C
T_{BIAS}	Temperature Under Bias		-55 to +125	°C
T_{STG}	Storage Temperatuure	Ceramic Plastic	-65 to +150 -55 to +125	°C
P_T	Power Dissipation		1.5	W
I_{OUT}	DC Output Current (Output High)		-50	mA

2786 tbl 04

NOTE:
1. Stresses greater than those listed under ABSOLUTE MAXIMUM RATINGS may cause permanent damage to the device. This is a stress rating only and functional operation of the device at these or any other conditions above those indicated in the operational sections of this specification is not implied. Exposure to absolute maximum rating conditions for extended periods may affect reliability.

AC/DC ELECTRICAL OPERATING RANGES

I/O	V_{EE}	T_A
10K	-5.2V ± 5%	0 to +75°C, air flow exceeding 2 m/sec
100K	-4.5V ± 5%	0 to +85°C, air flow exceeding 2 m/sec
101K	-4.75V to -5.46V	0 to +75°C, air flow exceeding 2 m/sec

2786 tbl 05

DC ELECTRICAL CHARACTERISTICS (1)

Symbol	Parameter		10K Min.	10K Max.	10K TA	100K/101K Min.	100K/101K Max.	Unit
V_{OH}	Output HIGH Voltage (V_{IN}= $V_{IH(Max)}$ or $V_{IL(Min)}$)		-1000 -960 -900	-840 -810 -720	0°C 25°C 75°C	-1025	-880	mV
V_{OL}	Output LOW Voltage (V_{IN}= $V_{IH(Max)}$ or $V_{IL(Min)}$)		-1870 -1850 -1830	-1665 -1650 -1625	0°C 25°C 75°C	-1810	-1620	mV
V_{OHC}	Output Threshold HIGH Voltage (V_{IN}= $V_{IH(Min)}$ or $V_{IL(Max)}$)		-1020 -980 -920	— — —	0°C 25°C 75°C	-1035	—	mV
V_{OLC}	Output Threshold LOW Voltage (V_{IN}= $V_{IH(Min)}$ or $V_{IL(Max)}$)		— — —	-1645 -1630 -1605	0°C 25°C 75°C	—	-1610	mV
V_{IH}	Input HIGH Voltage (Guaranteed Input Voltage High for All Inputs)		-1145 -1105 -1045	-840 -810 -720	0°C 25°C 75°C	-1165	-880	mV
V_{IL}	Input LOW Voltage (Guaranteed Input Voltage Low for All Inputs)		-1870 -1850 -1830	-1490 -1475 -1450	0°C 25°C 75°C	-1810	-1475	mV
I_{IH}	Input HIGH Current							
	V_{IN}= $V_{IH(Max)}$	CS	—	220	—	—	220	µA
		Others	—	110	—	—	110	µA
I_{IL}	Input LOW Current							
	V_{IN}= $V_{IL(Min)}$	CS	0.5	170	—	0.5	170	µA
		Others	-50	90	—	-50	90	µA
I_{EE}	Supply Current		-180	—	—	-170 (100K) -180 (101K)	— —	mA

NOTE:
1. RL = 50Ω to -2V, air flow exceeding 2 m/sec.

AC TEST LOAD CONDITION

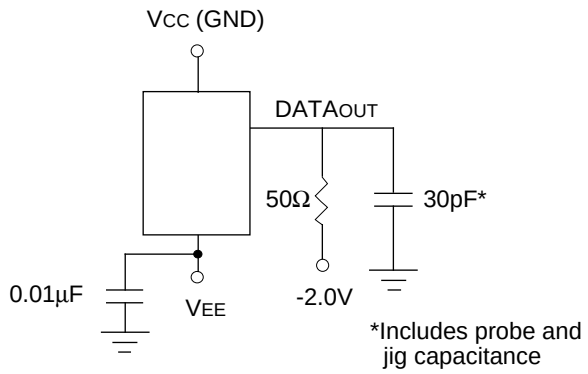

2786 drw 07

AC TEST INPUT PULSE

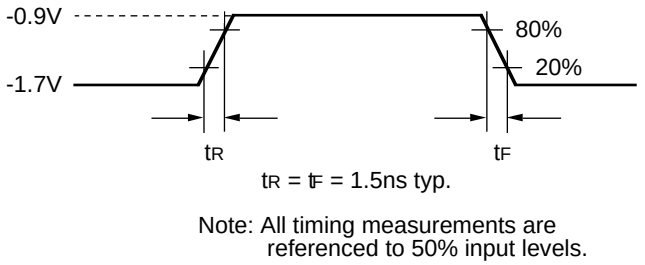

2786 drw 08

RISE/FALL TIME

Symbol	Parameter	Min.	Typ.	Max.	Unit
tR	Output Rise Time	—	1.5	—	ns
tF	Output Fall Time	—	1.5	—	ns

2786 tbl 06

FUNCTIONAL DESCRIPTION

The IDT10514, IDT100514, and IDT101514 BiCEMOS ECL static RAMs provide high speed with low power dissipation typical of BiCMOS ECL. These devices follow the conventional center power pinout and functionality for 256Kx4 ECL SRAMs.

READ TIMING

The read timing on these asynchronous devices is straightforward. DataOUT is held low until the device is selected by Chip Select (CS). The Address (ADDR) settles and data appears on the output after time t_{AA}. Note that DataOUT is held for a short time (t_{OH}) after the address begins to change for the next access, then ambiguous data is on the bus until a new time t_{AA}.

WRITE TIMING

To write data to the device, a Write Pulse need be formed on the Write Enable input (WE) to control the write to the SRAM array. While CS and ADDR must be set-up when WE goes low, DataIN can settle after the falling edge of WE, giving the data path extra margin. Data is written to the memory cell at the end of the Write Pulse, and addresses and Chip Select must be held after the rising edge of the Write Pulse to ensure satisfactory completion of the cycle.

DataOUT is disabled (held low) during the Write Cycle. If CS is held low (active) and addresses remain unchanged, the Data OUT pins will output the written data after "Write Recovery time" (t_{WR}).

Because of the very short Write Pulse requirement, these devices can be cycled as quickly for Writes as for Reads.

AC ELECTRICAL CHARACTERISTICS (Over the AC Operating Range)

Symbol	Parameter[1]	S10		S12		S15		
		Min.	Max.	Min.	Max.	Min.	Max.	Unit
Read Cycle								
t_{ACS}	Chip Select Access Time	—	5	—	6	—	7	ns
t_{RCS}	Chip Select Recovery Time	—	5	—	6	—	7	ns
t_{AA}	Address Access Time	—	10	—	12	—	15	ns
t_{OH}	Data Hold from Address Change	2.5	—	2.5	—	2.5	—	ns

NOTE:
1. Input and Output reference level is 50% point of waveform.

2786 tbl 07

READ CYCLE GATED BY CHIP SELECT (1, 2)

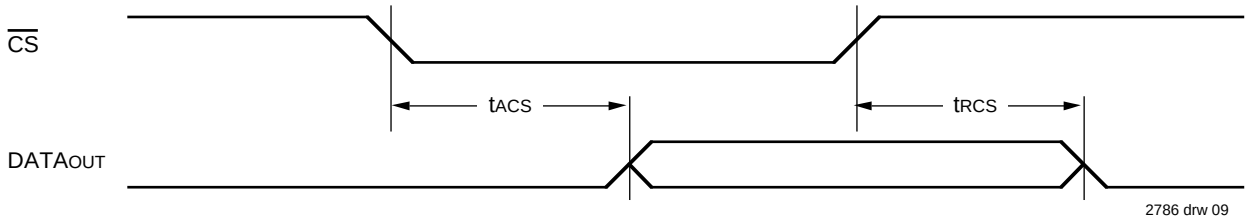

2786 drw 09

READ CYCLE GATED BY ADDRESS (1, 3)

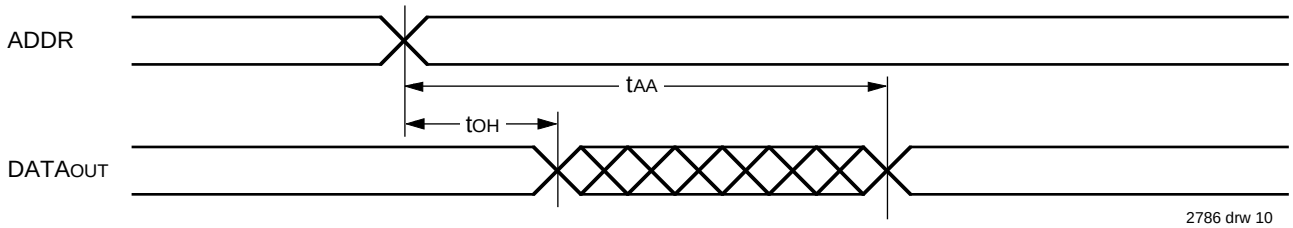

2786 drw 10

NOTE:
1. WE is high for read cycle.
2. Address valid prior to or minimum of tAA-tACS beforeCS active.
3. CS active prior to or minimum tAA-tACS after address valid.

AC ELECTRICAL CHARACTERISTICS (Over the AC Operating Range)

Symbol	Parameter[1]	S10 Min.	S10 Max.	S12 Min.	S12 Max.	S15 Min.	S15 Max.	Unit
Write Cycle								
t_W	Write Pulse Width (t_{WSA} = minimum)	8	—	10	—	10	—	ns
t_{WSD}	Data Set-up Time	0	—	0	—	2	—	ns
t_{WSD2}[2]	Data Set-up Time to $\overline{WE}$ High	6	—	8	—	8	—	ns
t_{WSA}	Address Set-up Time (t_W = minimum)	0	—	0	—	1	—	ns
t_{WSCS}	Chip Select Set-up Time	0	—	0	—	1	—	ns
t_{WHD}	Data Hold Time	1	—	1	—	1	—	ns
t_{WHA}	Address Hold Time	1	—	1	—	1	—	ns
t_{WHCS}	Chip Select Hold Time	1	—	1	—	1	—	ns
t_{WS}	Write Disable Time	—	6	—	6	—	6	ns
t_{WR}[3]	Write Recovery Time	—	12	—	14	—	16	ns

NOTE:

2786 tbl 08

1. Input and Output reference level is 50% point of waveform.
2. t_{WSD} is specified with respect to the falling edge of $\overline{WE}$ for compatibility with bipolar part specifications, but this device actually only requires t_{WSD2} with respect to rising edge of $\overline{WE}$.
3. t_{WR} is defined as the time to reflect the newly written data on the Data Outputs (Q0 to Q3) when no new Address Transition occurs.

WRITE CYCLE TIMING DIAGRAM

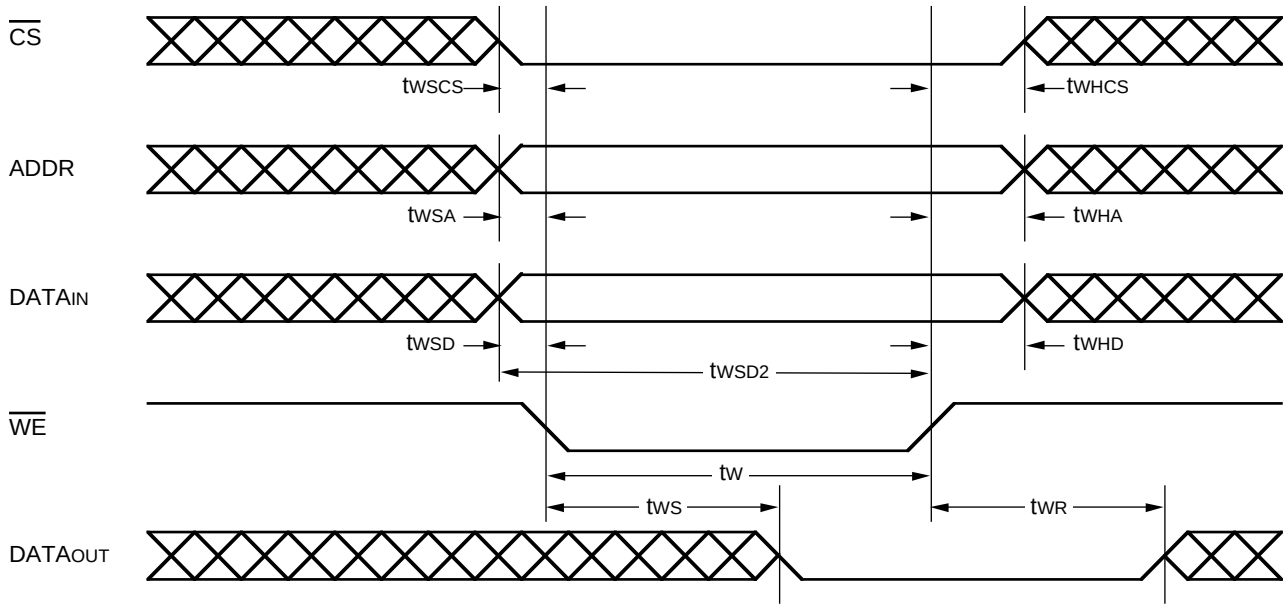

2786 drw 11

ORDERING INFORMATION

IDT nnnnn aa nn a a

Device Type	nnnnn	10514, 100514, 101514
Architecture	aa	S
Speed	nn	10, 12, 15
Package	a	C, E, U(1), Y
Process/ Temp. Range	a	Blank

Blank	Commercial
C	Sidebraze DIP
E	CERPACK
U(1)	Hi-Rel Die for MCMs and/or Hybrids
Y	Plastic SOJ
10, 12, 15	Speed in Nanoseconds
S	Standard Architecture
10514	1M (256K x 4-bits) BiCMOS ECL-10K
100514	1M (256K x 4-bits) BiCMOS ECL-100K
101514	1M (256K x 4-bits) BiCMOS ECL-101K

2786 drw 12

NOTE:
1. Please contact your IDT Sales Representative for more information on specifications and availability of Die products.

Integrated Device Technology, Inc.

2975 Stender Way, Santa Clara, CA 95054-3090 Telephone: (408) 727-6116 FAX 408-492-8674