Integrated Device Technology, Inc.

32K x 32, 3.3V SYNCHRONOUS SRAM WITH 3.3V/2.5V PIPELINED OUTPUTS AND INTERLEAVED/LINEAR BURST COUNTER

PRELIMINARY
IDT71V532

FEATURES:

- 32K x 32 memory configuration
- Supports high performance system speed - up to 133 MHz (4.5ns Clock-to-Data Access) in Pipelined Mode
- $\overline{LBO}$ input selects interleaved or linear burst mode
- Self-timed write cycle with global write control ($\overline{GW}$), byte write enable ($\overline{BWE}$), and byte writes ($\overline{BW}$x)
- Power down controlled by ZZ input
- The core operates with a 3.3V supply (+10/-5%) (V_{DD})
- I/O's can either operate at 3.3V (+10/-5%) or 2.5V (+0.4V/-0.2V) (V_{DDQ})
- I/O's are 5V - tolerant.
- Packaged in a JEDEC Standard 100-pin rectangular plastic thin quad flatpack (TQFP)

DESCRIPTION:

The IDT71V532 is a 3.3V high-speed 1,048,576-bit SRAM organized as 32K x 32 with full support of the Pentium™ and PowerPC™ processor interfaces. The pipelined burst architecture provides cost-effective 3-1-1-1 secondary cache performance for processors up to 133MHz.

The IDT71V532 SRAM contains write, data, address, and control registers. Internal logic allows the SRAM to generate a self-timed write based upon a decision which can be left until the extreme end of the write cycle.

The burst mode feature offers the highest level of performance to the system designer, as the IDT71V532 can provide four cycles of data for a single address presented to the SRAM. An internal burst address counter accepts the first cycle address from the processor, initiating the access sequence. The first cycle of output data will be pipelined for one cycle before it is available on the next rising clock edge. If burst mode operation is selected ($\overline{ADV}$=LOW), the subsequent three cycles of output data will be available to the user on the next three rising clock edges. The order of these three addresses will be defined by the internal burst counter and the $\overline{LBO}$ input pin.

The IDT71V532 SRAM utilizes IDT's high-performance, high-volume 3.3V CMOS process, and is packaged in a JEDEC Standard 14mm x 20mm 100-pin thin plastic quad flatpack (TQFP) for optimum board density in both desktop and notebook applications.

PIN DESCRIPTION SUMMARY

A_0 – A_{14}	Address Inputs	Input	Synchronous
$\overline{CE}$	Chip Enable	Input	Synchronous
CS_0, $\overline{CS_1}$	Chip Selects	Input	Synchronous
$\overline{OE}$	Output Enable	Input	Asynchronous
$\overline{GW}$	Global Write Enable	Input	Synchronous
$\overline{BWE}$	Byte Write Enable	Input	Synchronous
$\overline{BW_1}$, $\overline{BW_2}$, $\overline{BW_3}$, $\overline{BW_4}$	Individual Byte Write Selects	Input	Synchronous
CLK	Clock	Input	N/A
$\overline{ADV}$	Burst Address Advance	Input	Synchronous
$\overline{ADSC}$	Address Status (Cache Controller)	Input	Synchronous
$\overline{ADSP}$	Address Status (Processor)	Input	Synchronous
$\overline{LBO}$	Linear/Interleaved Burst Order	Input	DC
ZZ	Sleep Mode	Input	Asynchronous
I/O_0-I/O_{31}	Data Input/Output	I/O	Synchronous
V_{DD}, V_{DDQ}	3.3V Array, 3.3V or 2.5V I/O	Power	N/A
V_{SS}, V_{SSQ}	Array Ground, I/O Ground	Power	N/A

3616 tbl 01

PIN DEFINITIONS(1)

Symbol	Pin Function	I/O	Active	Description
A_0-A_{14}	Address Inputs	I	N/A	Synchronous Address inputs. The address register is triggered by a combination of the rising edge of CLK and $\overline{ADSC}$ Low or $\overline{ADSP}$ Low and $\overline{CE}$ Low.
$\overline{ADSC}$	Address Status (Cache Controller)	I	LOW	Synchronous Address Status from Cache Controller. $\overline{ADSC}$ is an active LOW input that is used to load the address registers with new addresses. $\overline{ADSC}$ is NOT GATED by $\overline{CE}$.
$\overline{ADSP}$	Address Status (Processor)	I	LOW	Synchronous Address Status from Processor. $\overline{ADSP}$ is an active LOW input that is used to load the address registers with new addresses. $\overline{ADSP}$ is gated by $\overline{CE}$.
$\overline{ADV}$	Burst Address Advance	I	LOW	Synchronous Address Advance. $\overline{ADV}$ is an active LOW input that is used to advance the internal burst counter, controlling burst access after the initial address is loaded. When this input is HIGH the burst counter is not incremented; that is, there is no address advance.
$\overline{BWE}$	Byte Write Enable	I	LOW	Synchronous byte write enable gates the byte write inputs $\overline{BW}_1$-$\overline{BW}_4$. If $\overline{BWE}$ is LOW at the rising edge of CLK then $\overline{BW}_X$ inputs are passed to the next stage in the circuit. A byte write can still be blocked if $\overline{ADSP}$ is LOW at the rising edge of CLK. If $\overline{ADSP}$ is HIGH and $\overline{BW}_X$ is LOW at the rising edge of CLK then data will be written to the SRAM. If $\overline{BWE}$ is HIGH then the byte write inputs are blocked and only $\overline{GW}$ can initiate a write cycle.
$\overline{BW}_1$-$\overline{BW}_4$	Individual Byte Write Enables	I	LOW	Synchronous byte write enables. Each 8-bit byte has its own active LOW byte write. Any active byte write causes all outputs to be disabled. $\overline{ADSP}$ LOW disables all byte writes. $\overline{BW}_1$-$\overline{BW}_4$ must meet specified setup and hold times with respect to CLK.
$\overline{CE}$	Chip Enable	I	LOW	Synchronous chip enable. $\overline{CE}$ is used with CS_0 and $\overline{CS}_1$ to enable the IDT71V532. $\overline{CE}$ also gates $\overline{ADSP}$.
CLK	Clock	I	N/A	This is the clock input. All timing references for the device are made with respect to this input.
CS_0	Chip Select 0	I	HIGH	Synchronous active HIGH chip select. CS_0 is used with $\overline{CE}$ and $\overline{CS}_1$ to enable the chip.
$\overline{CS}_1$	Chip Select 1	I	LOW	Synchronous active LOW chip select. $\overline{CS}_1$ is used with $\overline{CE}$ and CS_0 to enable the chip.
$\overline{GW}$	Global Write Enable	I	LOW	Synchronous global write enable. This input will write all four 8-bit data bytes when LOW on the rising edge of CLK. $\overline{GW}$ superceeds individual byte write enables.
I/O_0-I/O_{31}	Data Input/Output	I/O	N/A	Synchronous data input/output (I/O) pins. Both the data input path and data output path are registered and triggered by the rising edge of CLK.
$\overline{LBO}$	Linear Burst Order	I	LOW	Asynchronous burst order selection DC input. When $\overline{LBO}$ is HIGH the Interleaved (Intel) burst sequence is selected. When $\overline{LBO}$ is LOW the Linear (PowerPC) burst sequence is selected. $\overline{LBO}$ is a static DC input and must not change state while the device is operating.
$\overline{OE}$	Output Enable	I	LOW	Asynchronous output enable. When $\overline{OE}$ is LOW the data output drivers are enabled on the I/O pins if the chip is also selected. When $\overline{OE}$ is HIGH the I/O pins are in a high-impedence state.
V_{DD}	Power Supply	N/A	N/A	3.3V core power supply inputs.
V_{DDQ}	Power Supply	N/A	N/A	User selectable 3.3V or 2.5V I/O power supply inputs.
V_{SS}	Ground	N/A	N/A	Core ground pins.
V_{SSQ}	Ground	N/A	N/A	I/O ground pins.
NC	No Connect	N/A	N/A	NC pins are not electrically connected to the chip.
ZZ	Sleep Mode	I	HIGH	Asynchronous sleep mode input. ZZ HIGH will gate the CLK internally and power down the IDT71V532 to its lowest power consumption level. Data retention is guaranteed in Sleep Mode.

NOTE: 3616 tbl 02

1. All synchronous inputs must meet specified setup and hold times with respect to CLK.

FUNCTIONAL BLOCK DIAGRAM

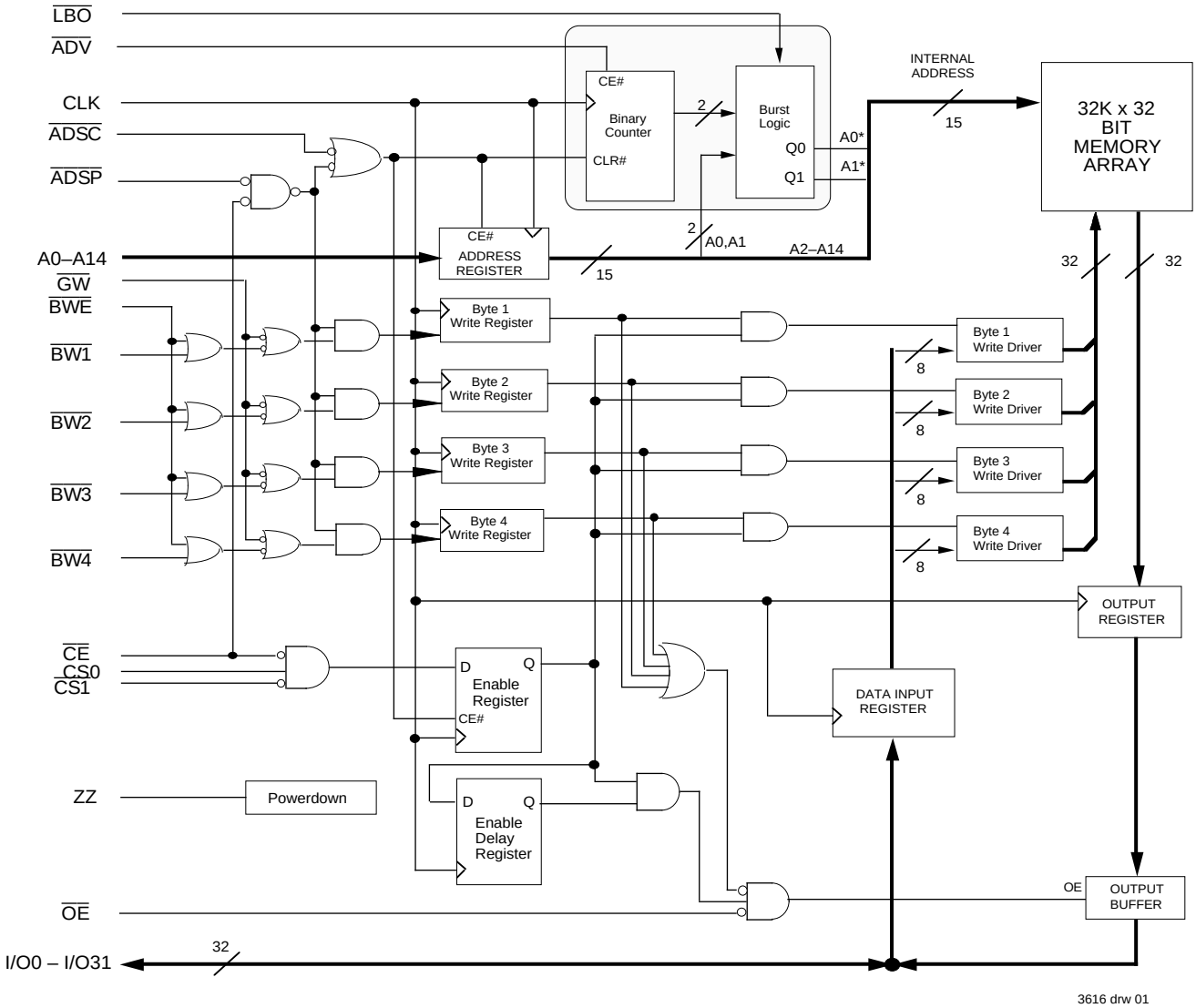

.

RECOMMENDED DC OPERATING CONDITIONS WITH VDDQ AT 3.3V.

Symbol	Parameter	Min.	Typ.	Max.	Unit
V_{DD}	Core Supply Voltage	3.135	3.3	3.63	V
V_{DDQ}	I/O Supply Voltage	3.135	3.3	3.63	V
V_{SS}, V_{SSQ}	Ground	0	0	0	V
V_{IH}	Input High Voltage	2.0(1)	—	5.5(2)	V
V_{IL}	Input Low Voltage	–0.5(3)	—	0.8	V

NOTE: 3616 tbl 03

1. V_{IH} and V_{IL} as indicated is for both input only and I/O pins.
2. V_{IH} (max) = 6.0V for pulse width less than tCYC/2, once per cycle.
3. V_{IL} (min) = -1.0V for pulse width less than tCYC/2, once per cycle.

RECOMMENDED DC OPERATING CONDITIONS WITH VDDQ AT 2.5V.

Symbol	Parameter	Min.	Typ.	Max.	Unit
V_{DD}	Core Supply Voltage	3.135	3.3	3.63	V
V_{DDQ}	I/O Supply Voltage	2.375	2.5	2.9	V
V_{SS}, V_{SSQ}	Ground	0	0	0	V
V_{IH}	Input High Voltage	1.7(1)	—	5.5(2)	V
V_{IL}	Input Low Voltage	–0.3(3)	—	0.7	V

NOTE: 3616 tbl 04

1. V_{IH} and V_{IL} as indicated is for both input only and I/O pins.
2. V_{IH} (max) = 6.0V for pulse width less than tCYC/2, once per cycle.
3. V_{IL} (min) = -1.0V for pulse width less than tCYC/2, once per cycle.

PIN CONFIGURATION

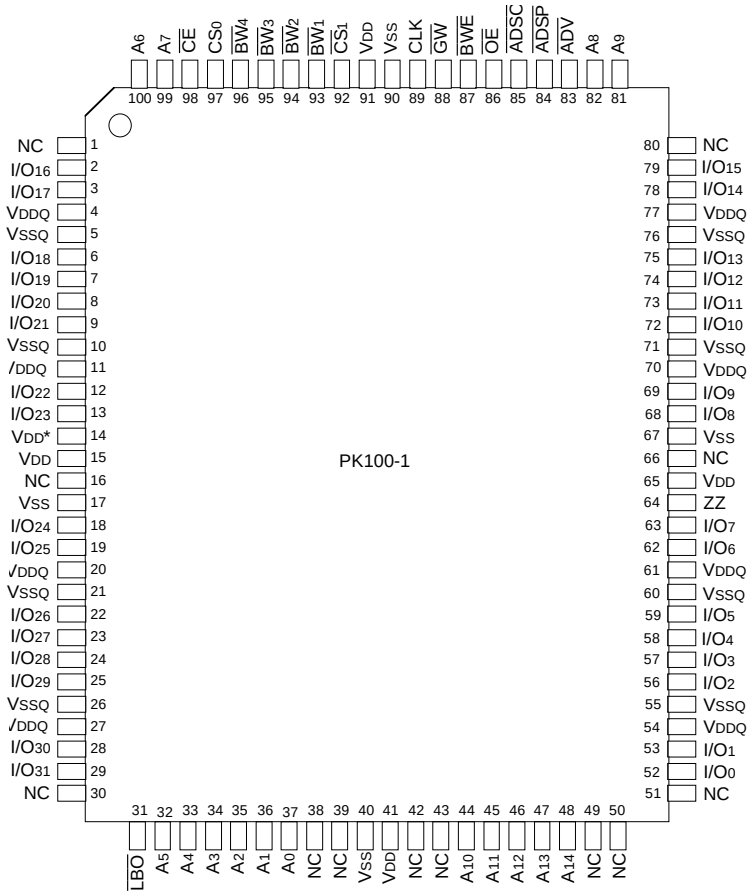

* Pin 14 does not have to be directly connected to V_{DD} as long as the input voltage is ≥ V_{IH}

3616 drw 02

TOP VIEW
TQFP

ABSOLUTE MAXIMUM RATINGS(1)

Symbol	Rating	Com'l.	Unit
V_{TERM}(2)	Terminal Voltage with Respect to GND	–0.5 to +5.5	V
V_{TERM}(3)	Terminal Voltage with Respect to GND	–0.5 to +5.5	V
T_A	Operating Temperature	0 to +70	°C
T_{BIAS}	Temperature Under Bias	–55 to +125	°C
T_{STG}	Storage Temperature	–55 to +125	°C
P_T	Power Dissipation	1.0	W
I_{OUT}	DC Output Current	50	mA

NOTES: 3616 tbl 05

1. Stresses greater than those listed under ABSOLUTE MAXIMUM RATINGS may cause permanent damage to the device. This is a stress rating only and functional operation of the device at these or any other conditions above those indicated in the operational sections of this specification is not implied. Exposure to absolute maximum rating conditions for extended periods may affect reliability.
2. V_{DD}, V_{DDQ} and Input terminals only.
3. I/O terminals.

CAPACITANCE

(T_A = +25°C, f = 1.0MHz, TQFP package)

Symbol	Parameter(1)	Conditions	Max.	Unit
C_{IN}	Input Capacitance	V_{IN} = 3dV	6	pF
$C_{I/O}$	I/O Capacitance	V_{OUT} = 3dV	7	pF

NOTE: 3616 tbl 06

1. This parameter is guaranteed by device characterization, but not production tested.

DC ELECTRICAL CHARACTERISTICS OVER THE OPERATING TEMPERATURE AND SUPPLY VOLTAGE RANGE (V_{DD} = 3.3V +10/-5%)

Symbol	Parameter	Test Condition	Min.	Max.	Unit
$\|I_{LI}\|$	Input Leakage Current	V_{DD} = Max., V_{IN} = 0V to V_{DD}	—	5	µA
$\|I_{LZZ}\|$	ZZ Input Leakage Current(1)	V_{DD} = Max., V_{IN} = 0V to V_{DD}	—	30	µA
$\|I_{LO}\|$	Output Leakage Current V_{OUT} = 0V to V_{DD}, V_{DD} = Max.	$\overline{CE} \geq V_{IH}$ or $\overline{OE} \geq V_{IH}$,	—	5	µA
V_{OL}(3.3V)	Output Low Voltage	I_{OL} = 5mA, V_{DD} = Min.	—	0.4	V
V_{OH} (3.3V)	Output High Voltage	I_{OH} = –5mA, V_{DD} = Min.	2.4	—	V
V_{OL}(2.5V)	Output Low Voltage	I_{OL} = 5mA, V_{DD} = Min.	—	0.7	V
V_{OH} (2.5V)	Output High Voltage	I_{OH} = –5mA, V_{DD} = Min.	1.7	—	V

NOTE: 3616 tbl 07

1. The ZZ pin will be internally pulled to V_{SS} if it is not actively driven in the application.

DC ELECTRICAL CHARACTERISTICS OVER THE OPERATING TEMPERATURE AND SUPPLY VOLTAGE RANGE(1) (V_{DD} = 3.3V +10/-5%, V_{HD} = V_{DDQ}–0.2V, V_{LD} = 0.2V)

Symbol	Parameter	Test Condition	133MHz	125MHz	100MHz	75MHz	66MHz	Unit
I_{DD}	Operating Core Power Supply Current	Device Selected, Outputs Open, V_{DD} = Max., $V_{IN} \geq V_{IH}$ or $\leq V_{IL}$, f = f_{MAX}(2)	290	280	270	260	250	mA
I_{DDQ}	Operating I/O Power Supply Current	Device Selected, Outputs Open, V_{DDQ} = Max., $V_{IN} \geq V_{IH}$ or $\leq V_{IL}$, f = f_{MAX}(2)	20	20	20	15	15	mA
I_{SB}	Standby Core Power Supply Current	Device Deselected, Outputs Open, V_{DD} = Max., $V_{IN} \geq V_{IH}$ or $\leq V_{IL}$, f = f_{MAX}(2)	70	65	60	55	50	mA
I_{SBQ}	Standby I/O Power Supply Current	Device Deselected, Outputs Open, V_{DDQ} = Max., $V_{IN} \geq V_{IH}$ or $\leq V_{IL}$, f = f_{MAX}(2)	3	3	3	3	3	mA
I_{SB1}	Full Standby Core Power Supply Current	Device Deselected, Outputs Open, V_{DD} = Max., $V_{IN} \geq V_{HD}$ or $\leq V_{LD}$, f = 0(2)	25	25	25	25	25	mA
I_{SB1Q}	Full Standby I/O Power Supply Current	Device Deselected, Outputs Open, V_{DDQ} = Max., $V_{IN} \geq V_{HD}$ or $\leq V_{LD}$, f = 0(2)	3	3	3	3	3	mA
I_{ZZ}	Full Sleep Mode Core Power Supply Current	ZZ $\geq V_{HD}$, V_{DD} = Max.	5	5	5	5	5	mA
I_{ZZQ}	Full Sleep Mode I/O Power Supply Current	ZZ $\geq V_{HD}$, V_{DDQ} = Max.	1	1	1	1	1	mA

NOTES: 3616 tbl 08

1. All values are maximum guaranteed values.
2. At f = f_{MAX}, address inputs are cycling at the maximum frequency of read cycles of 1/t_{CYC} while $\overline{ADSC}$ = LOW; f=0 means no address input lines are changing.

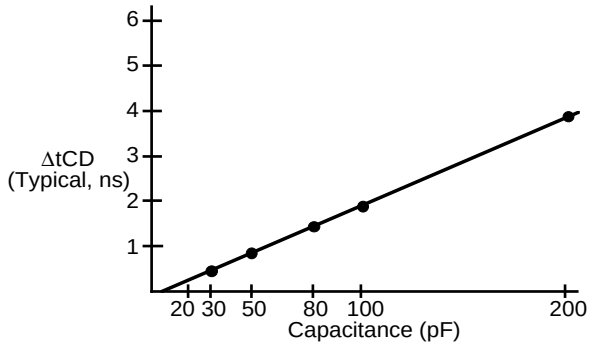

3616 drw 03

Figure 1. Lumped Capacitive Load, Typical Derating

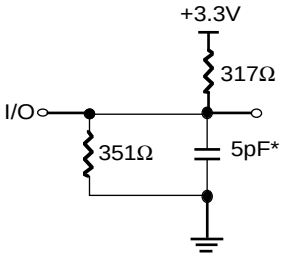

3616 drw 04

Figure 2. High Impedence Test Load (for t_{OHZ}, t_{CHZ}, t_{OLZ}, and t_{DC1})

*** Including scope and jig**

SYNCHRONOUS TRUTH TABLE(1, 2)

Operation	Address Used	$\overline{CE}$	CS_0	$\overline{CS_1}$	$\overline{ADSP}$	$\overline{ADSC}$	$\overline{ADV}$	$\overline{GW}$	$\overline{BWE}$	$\overline{BWx}$	$\overline{OE}$ (3)	CLK	I/O
Deselected Cycle, Power Down	None	H	X	X	X	L	X	X	X	X	X	↑	HI-Z
Deselected Cycle, Power Down	None	L	X	H	L	X	X	X	X	X	X	↑	HI-Z
Deselected Cycle, Power Down	None	L	L	X	L	X	X	X	X	X	X	↑	HI-Z
Deselected Cycle, Power Down	None	L	X	H	X	L	X	X	X	X	X	↑	HI-Z
Deselected Cycle, Power Down	None	L	L	X	X	L	X	X	X	X	X	↑	HI-Z
Read Cycle, Begin Burst	External	L	H	L	L	X	X	X	X	X	L	↑	D_{OUT}
Read Cycle, Begin Burst	External	L	H	L	L	X	X	X	X	X	H	↑	HI-Z
Read Cycle, Begin Burst	External	L	H	L	H	L	X	H	H	X	L	↑	D_{OUT}
Read Cycle, Begin Burst	External	L	H	L	H	L	X	H	L	H	L	↑	D_{OUT}
Read Cycle, Begin Burst	External	L	H	L	H	L	X	H	L	H	H	↑	HI-Z
Write Cycle, Begin Burst	External	L	H	L	H	L	X	H	L	L	X	↑	D_{IN}
Write Cycle, Begin Burst	External	L	H	L	H	L	X	L	X	X	X	↑	D_{IN}
Read Cycle, Continue Burst	Next	X	X	X	H	H	L	H	H	X	L	↑	D_{OUT}
Read Cycle, Continue Burst	Next	X	X	X	H	H	L	H	H	X	H	↑	HI-Z
Read Cycle, Continue Burst	Next	X	X	X	H	H	L	H	X	H	L	↑	D_{OUT}
Read Cycle, Continue Burst	Next	X	X	X	H	H	L	H	X	H	H	↑	HI-Z
Read Cycle, Continue Burst	Next	H	X	X	X	H	L	H	H	X	L	↑	D_{OUT}
Read Cycle, Continue Burst	Next	H	X	X	X	H	L	H	H	X	H	↑	HI-Z
Read Cycle, Continue Burst	Next	H	X	X	X	H	L	H	X	H	L	↑	D_{OUT}
Read Cycle, Continue Burst	Next	H	X	X	X	H	L	H	X	H	H	↑	HI-Z
Write Cycle, Continue Burst	Next	X	X	X	H	H	L	H	L	L	X	↑	D_{IN}
Write Cycle, Continue Burst	Next	X	X	X	H	H	L	L	X	X	X	↑	D_{IN}
Write Cycle, Continue Burst	Next	H	X	X	X	H	L	H	L	L	X	↑	D_{IN}
Write Cycle, Continue Burst	Next	H	X	X	X	H	L	L	X	X	X	↑	D_{IN}
Read Cycle, Suspend Burst	Current	X	X	X	H	H	H	H	H	X	L	↑	D_{OUT}
Read Cycle, Suspend Burst	Current	X	X	X	H	H	H	H	H	X	H	↑	HI-Z
Read Cycle, Suspend Burst	Current	X	X	X	H	H	H	H	X	H	L	↑	D_{OUT}
Read Cycle, Suspend Burst	Current	X	X	X	H	H	H	H	X	H	H	↑	HI-Z
Read Cycle, Suspend Burst	Current	H	X	X	X	H	H	H	H	X	L	↑	D_{OUT}
Read Cycle, Suspend Burst	Current	H	X	X	X	H	H	H	H	X	H	↑	HI-Z
Read Cycle, Suspend Burst	Current	H	X	X	X	H	H	H	X	H	L	↑	D_{OUT}
Read Cycle, Suspend Burst	Current	H	X	X	X	H	H	H	X	H	H	↑	HI-Z
Write Cycle, Suspend Burst	Current	X	X	X	H	H	H	H	L	L	X	↑	D_{IN}
Write Cycle, Suspend Burst	Current	X	X	X	H	H	H	L	X	X	X	↑	D_{IN}
Write Cycle, Suspend Burst	Current	H	X	X	X	H	H	H	L	L	X	↑	D_{IN}
Write Cycle, Suspend Burst	Current	H	X	X	X	H	H	L	X	X	X	↑	D_{IN}

NOTES:

3616 tbl 09

1. L = V_{IL}, H = V_{IH}, X = Don't Care.
2. $\overline{ZZ}$ = LOW for this table.
3. $\overline{OE}$ is an asynchronous input.

SYNCHRONOUS WRITE FUNCTION TRUTH TABLE(1)

Operation	$\overline{GW}$	$\overline{BWE}$	$\overline{BW_1}$	$\overline{BW_2}$	$\overline{BW_3}$	$\overline{BW_4}$
Read	H	H	X	X	X	X
Read	H	L	H	H	H	H
Write all Bytes	L	X	X	X	X	X
Write all Bytes	H	L	L	L	L	L
Write Byte 1 (2)	H	L	L	H	H	H
Write Byte 2 (2)	H	L	H	L	H	H
Write Byte 3 (2)	H	L	H	H	L	H
Write Byte 4 (2)	H	L	H	H	H	L

NOTES: 3616 tbl 10
1. L = V_{IL}, H = V_{IH}, X = Don't Care.
2. Multiple bytes may be selected during the same cycle.

ASYNCHRONOUS TRUTH TABLE(1)

Operation(2)	$\overline{OE}$	ZZ	I/O Status	Power
Read	L	L	Data Out (I/O_0 – I/O_{31})	Active
Read	H	L	High-Z	Active
Write	X	L	High-Z — Data In (I/O_0 – I/O_{31})	Active
Deselected	X	L	High-Z	Standby
Sleep Mode	X	H	High-Z	Sleep

NOTES: 3616 tbl 11
1. L = V_{IL}, H = V_{IH}, X = Don't Care.
2. Synchronous function pins must be biased appropriately to satisfy operation requirements.

INTERLEAVED BURST SEQUENCE TABLE ($\overline{LBO}$=V_{DD})

	Sequence 1		Sequence 2		Sequence 3		Sequence 4	
	A1	A0	A1	A0	A1	A0	A1	A0
First Address	0	0	0	1	1	0	1	1
Second Address	0	1	0	0	1	1	1	0
Third Address	1	0	1	1	0	0	0	1
Fourth Address(1)	1	1	1	0	0	1	0	0

NOTE: 3616 tbl 12
1. Upon completion of the Burst sequence the counter wraps around to its initial state.

LINEAR BURST SEQUENCE TABLE ($\overline{LBO}$=V_{SS})

	Sequence 1		Sequence 2		Sequence 3		Sequence 4	
	A1	A0	A1	A0	A1	A0	A1	A0
First Address	0	0	0	1	1	0	1	1
Second Address	0	1	1	0	1	1	0	0
Third Address	1	0	1	1	0	0	0	1
Fourth Address(1)	1	1	0	0	0	1	1	0

NOTE: 3616 tbl 13
1. Upon completion of the Burst sequence the counter wraps around to its initial state.

AC ELECTRICAL CHARACTERISTICS

(V_{DD} = 3.3V +10/-5%, V_{DDQ} = 3.3V +10/-5% or V_{DDQ} = 2.5V +0.4V/-0.2V, T_A = 0 to 70°C)

		133 MHz		120 MHz		100 MHz		75 MHz		66 MHz		
Symbol	**Parameter**	**Min.**	**Max.**	**Min.**	**Max.**	**Min.**	**Max.**	**Min.**	**Max.**	**Min.**	**Max.**	**Unit**
Clock Parameter												
t_{CYC}	Clock Cycle Time	7.5	—	8.3	—	10	—	13	—	15	—	ns
t_{CH}(1)	Clock High Pulse Width	2.1	—	2.5	—	3.7	—	4.5	—	5	—	ns
t_{CL}(1)	Clock Low Pulse Width	2.1	—	2.5	—	3.7	—	4.5	—	5	—	ns
Output Parameters												
t_{CD}	Clock High to Valid Data	—	4.5	—	5	—	5.5	—	6	—	7	ns
t_{CDC}	Clock High to Data Change	2	—	2	—	2	—	2	—	2	—	ns
t_{CLZ}(2)	Clock High to Output Active	0	—	0	—	0	—	0	—	0	—	ns
t_{CHZ}(2)	Clock High to Data High-Z	2	4	2	4.5	2	5	2	5	2	6	ns
t_{OE}	Output Enable Access Time	—	4	—	4.5	—	5	—	5	—	6	ns
t_{OLZ}(2)	Output Enable Low to Data Active	0	—	0	—	0	—	0	—	0	—	ns
t_{OHZ}(2)	Output Enable High to Data High-Z	—	3	—	4	—	5	—	5	—	6	ns
Set Up Times												
t_{SA}	Address Setup Time	2	—	2.5	—	2.5	—	2.5	—	2.5	—	ns
t_{SS}	Address Status Setup Time	2	—	2.5	—	2.5	—	2.5	—	2.5	—	ns
t_{SD}	Data In Setup Time	2	—	2.5	—	2.5	—	2.5	—	2.5	—	ns
t_{SW}	Write Setup Time	2	—	2.5	—	2.5	—	2.5	—	2.5	—	ns
t_{SAV}	Address Advance Setup Time	2	—	2.5	—	2.5	—	2.5	—	2.5	—	ns
t_{SC}	Chip Enable/Select Setup Time	2	—	2.5	—	2.5	—	2.5	—	2.5	—	ns
Hold Times												
t_{HA}	Address Hold Time	0.5	—	0.5	—	0.5	—	0.5	—	0.5	—	ns
t_{HS}	Address Status Hold Time	0.5	—	0.5	—	0.5	—	0.5	—	0.5	—	ns
t_{HD}	Data In Hold Time	0.5	—	0.5	—	0.5	—	0.5	—	0.5	—	ns
t_{HW}	Write Hold Time	0.5	—	0.5	—	0.5	—	0.5	—	0.5	—	ns
t_{HAV}	Address Advance Hold Time	0.5	—	0.5	—	0.5	—	0.5	—	0.5	—	ns
t_{HC}	Chip Enable/Select Hold Time	0.5	—	0.5	—	0.5	—	0.5	—	0.5	—	ns
Sleep Mode and Config. Parameters												
t_{ZZPW}	ZZ Pulse Width	100	—	100	—	100	—	100	—	100	—	ns
t_{ZZR}(3)	ZZ Recovery Time	100	—	100	—	100	—	100	—	100	—	ns
t_{CFG}(4)	Configuration Set-up Time	30	—	32	—	40	—	48	—	60	—	ns

3616 tbl 14

NOTES:
1. Measured as HIGH above 2.0V and LOW below 0.8V.
2. Transition is measured ±200mV from steady-state.
3. Device must be deselected when powered-up from sleep mode.
4. t_{CFG} is the minimum time required to configure the device based on the $\overline{LBO}$ input. $\overline{LBO}$ is a static input and must not change during normal operation.

AC TEST LOAD

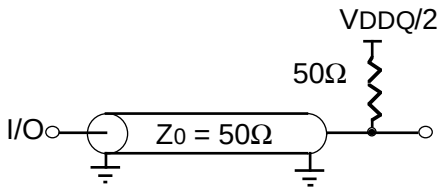

3616 drw 05

Figure 3. AC Test Load

AC TEST CONDITIONS (V_{DDQ} = 3.3V / 2.5V)

Input Pulse Levels	0 to 3V / 0 to 2.5V
Input Rise/Fall Times	2ns
Input Timing Reference Levels	1.5V / 1.25V
Output Timing Reference Levels	1.5V / 1.25V
AC Test Load	See Figures 2 and 3

3616 tbl 15

TIMING WAVEFORM OF PIPELINED READ CYCLE(1, 2)

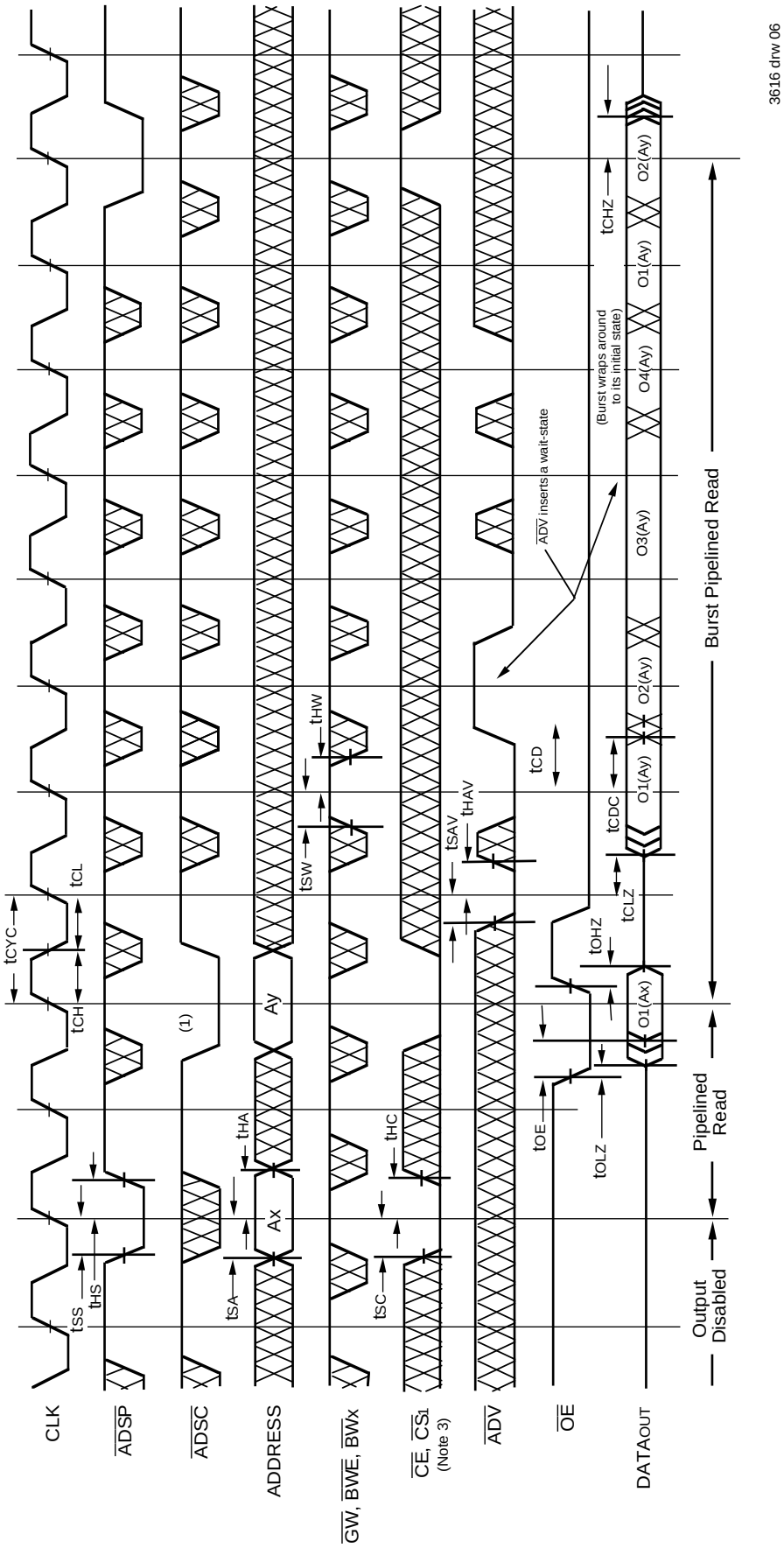

3616 drw 06

NOTES:
1. O1 (Ax) represents the first output from the external address Ax. O1 (Ay) represents the first output from the external address Ay; O2 (Ay) represents the next output data in the burst sequence of the base address Ay, etc. where A0 and A1 are advancing for the four word burst in the sequence defined by the state of the LBO input.
2. ZZ input is LOW and LBO is Don't Care for this cycle.
3. CS0 timing transitions are identical but inverted to the CE and CS1 signals. For example, when CE and CS1 are LOW on this waveform, CS0 is HIGH.

TIMING WAVEFORM OF COMBINED PIPELINED READ AND WRITE CYCLES(1, 2, 3)

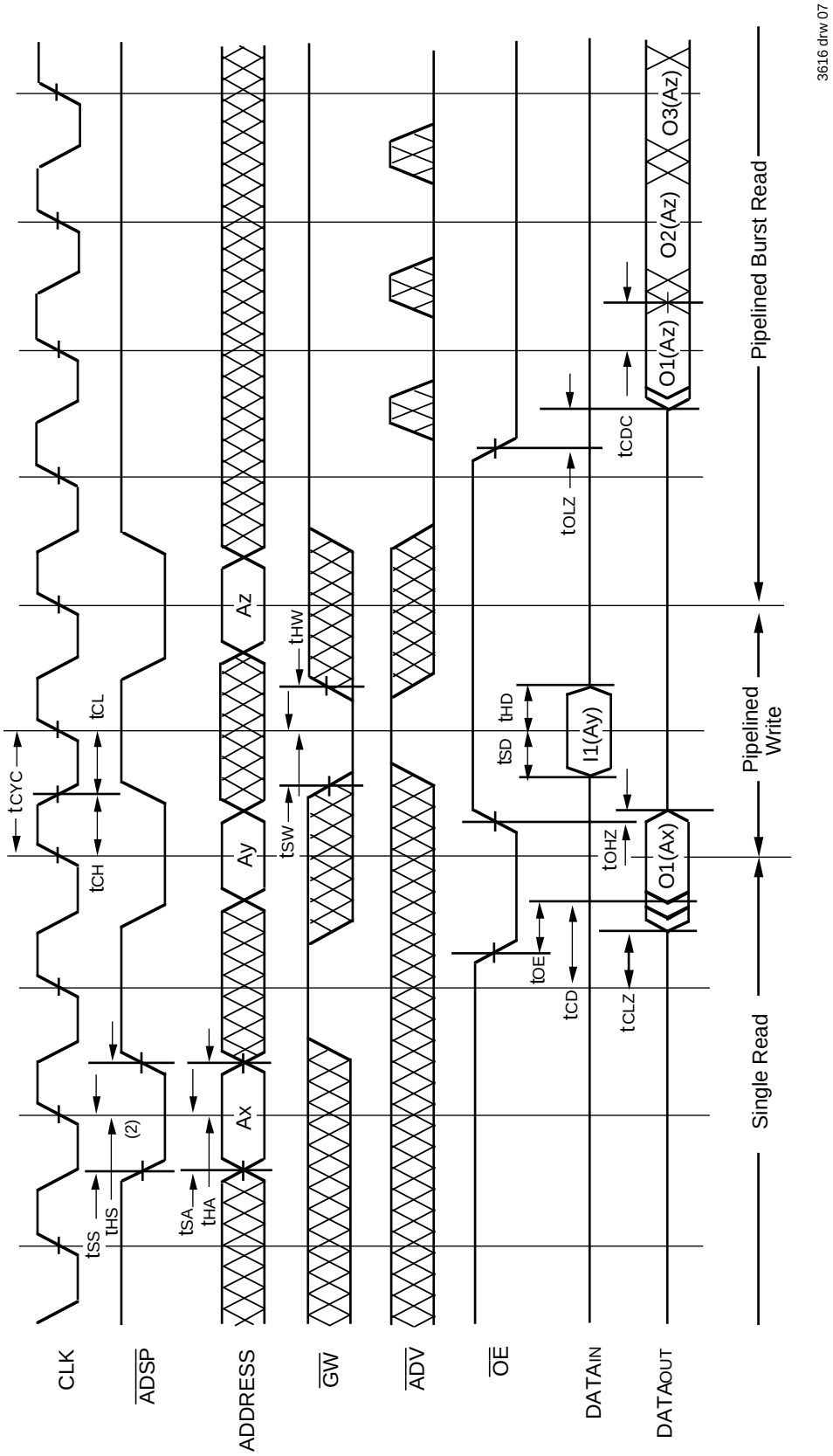

NOTES:
1. Device is selected through entire cycle; $\overline{CE}$ and $\overline{CS_1}$ are LOW, CS_0 is HIGH.
2. ZZ input is LOW and $\overline{LBO}$ is Don't Care for this cycle.
3. O1 (Ax) represents the first output from the external address Ax. O1 (Ay) represents the first output from the external address Ay; O2 (Ay) represents the next output data in the burst sequence of the base address Ay, etc. where A0 and A1 are advancing for the four word burst in the sequence defined by the state of the $\overline{LBO}$ input.

TIMING WAVEFORM OF WRITE CYCLE NO. 1 - $\overline{GW}$ CONTROLLED(1, 2, 3)

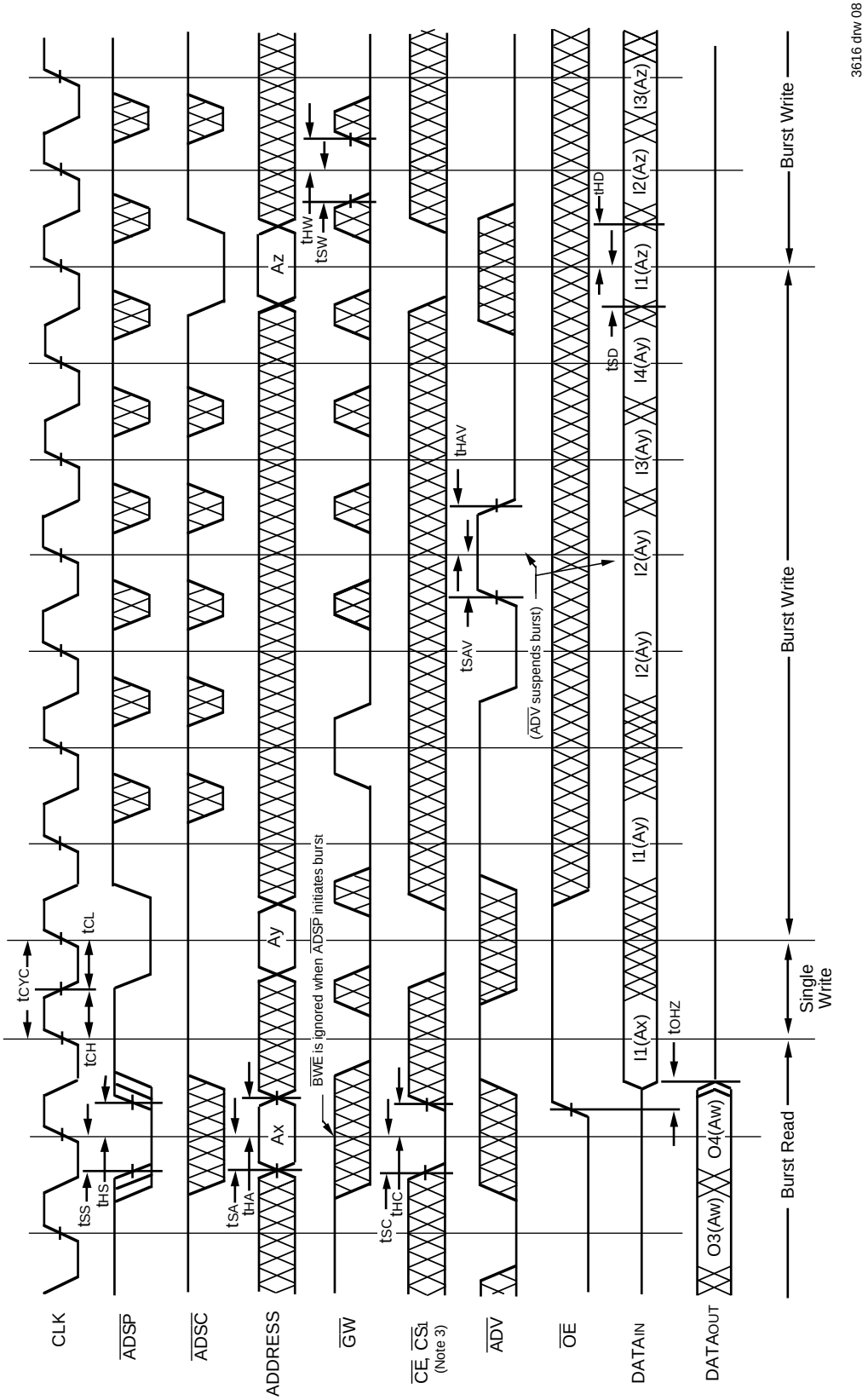

NOTES:
1. ZZ input is LOW, $\overline{BWE}$ is HIGH, and $\overline{LBO}$ is Don't Care for this cycle.
2. O1 (Ax) represents the first output from the external address Ax. O1 (Ay) represents the first output from the external address Ay; O2 (Ay) represents the next output data in the burst sequence of the base address Ay, etc. where A0 and A1 are advancing for the four word burst in the sequence defined by the state of the $\overline{LBO}$ input.
3. CS0 timing transitions are identical but inverted to the $\overline{CE}$ and $\overline{CS_1}$ signals. For example, when $\overline{CE}$ and $\overline{CS_1}$ are LOW on this waveform, CS0 is HIGH.

TIMING WAVEFORM OF WRITE CYCLE NO. 2 - BYTE CONTROLLED(1, 2, 3)

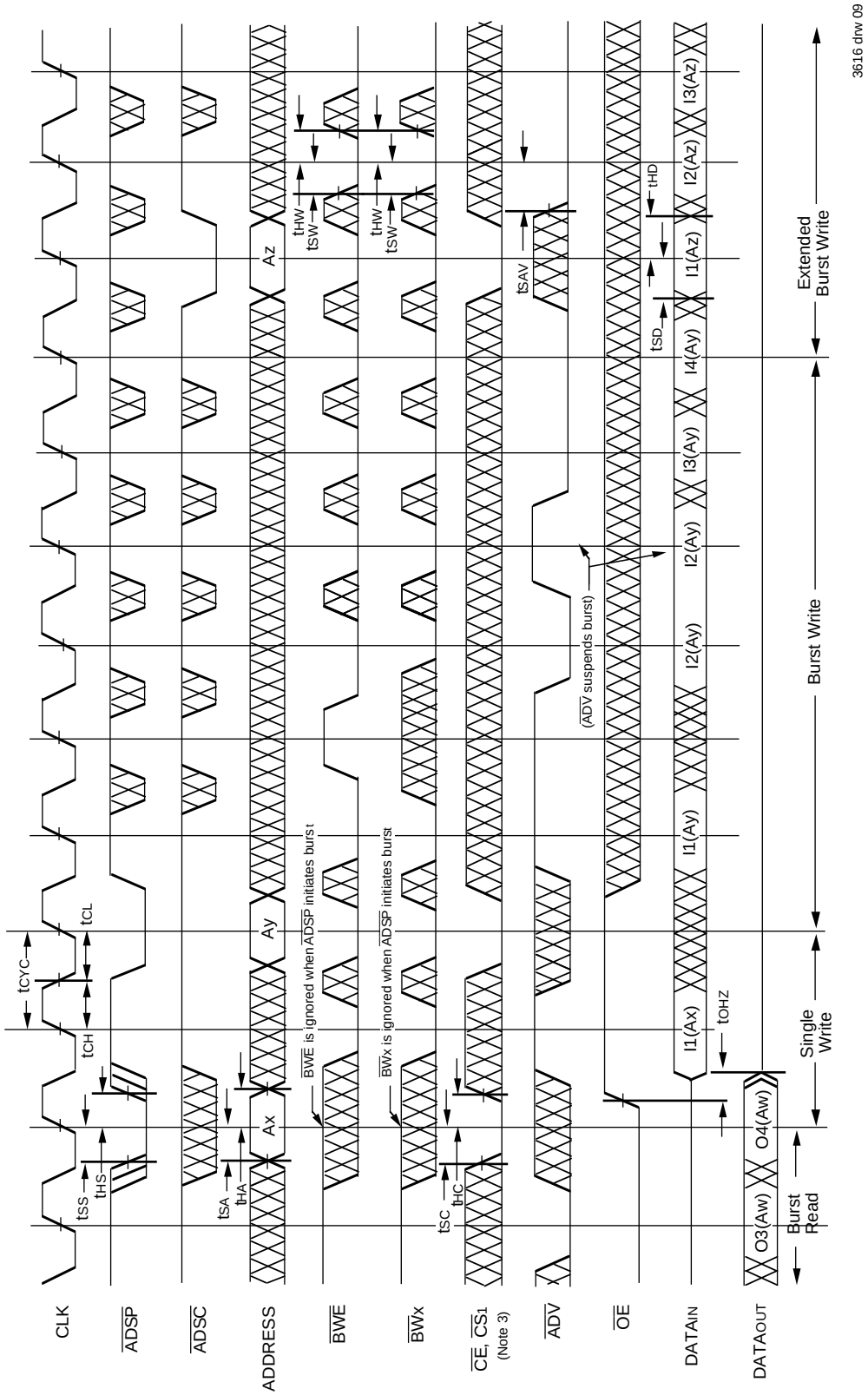

NOTES:
1. ZZ input is LOW, $\overline{GW}$ is HIGH, and $\overline{LBO}$ is Don't Care for this cycle.
2. O1 (Ax) represents the first output from the external address Ax. O1 (Ay) represents the first output from the external address Ay; O2 (Ay) represents the next output data in the burst sequence of the base address Ay, etc. where A0 and A1 are advancing for the four word burst in the sequence defined by the state of the $\overline{LBO}$ input.
3. CS0 timing transitions are identical but inverted to the $\overline{CE}$ and $\overline{CS_1}$ signals. For example, when $\overline{CE}$ and $\overline{CS_1}$ are LOW on this waveform, CS0 is HIGH.

TIMING WAVEFORM OF SLEEP (ZZ) AND POWER-DOWN MODES(1, 2, 3)

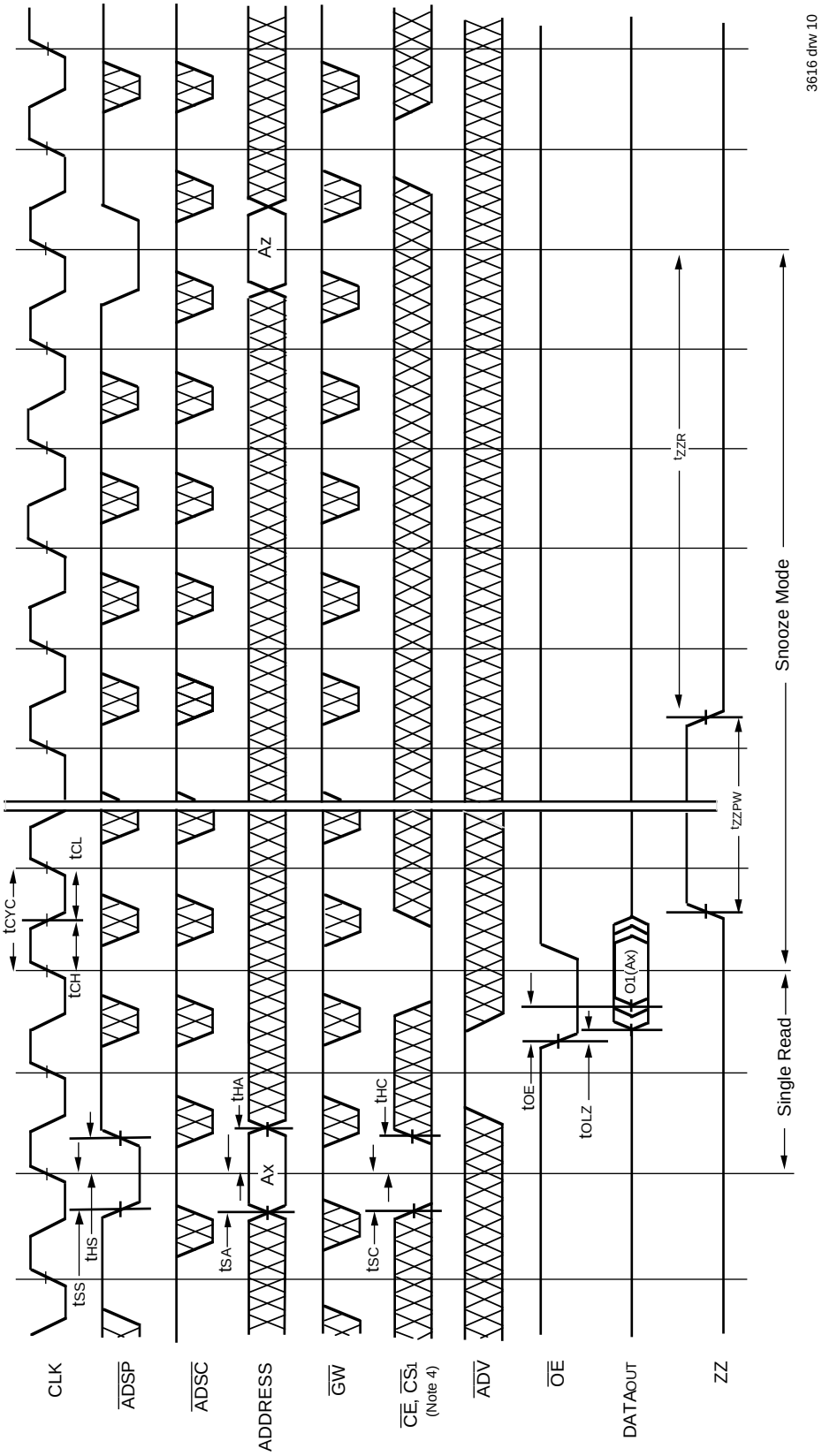

NOTES:
1. Device must power up in deselected Mode ($\overline{CE}$ and $\overline{CS_1}$ are HIGH, CS_0 is LOW).
2. $\overline{LBO}$ input is Don't Care for this cycle.
3. It is not necessary to retain the state of the input registers throughout the Power-down cycle.
4. CS_0 timing transitions are identical but inverted to the $\overline{CE}$ and $\overline{CS_1}$ signals. For example, when $\overline{CE}$ and $\overline{CS_1}$ are LOW on this waveform, CS_0 is HIGH.

ORDERING INFORMATION

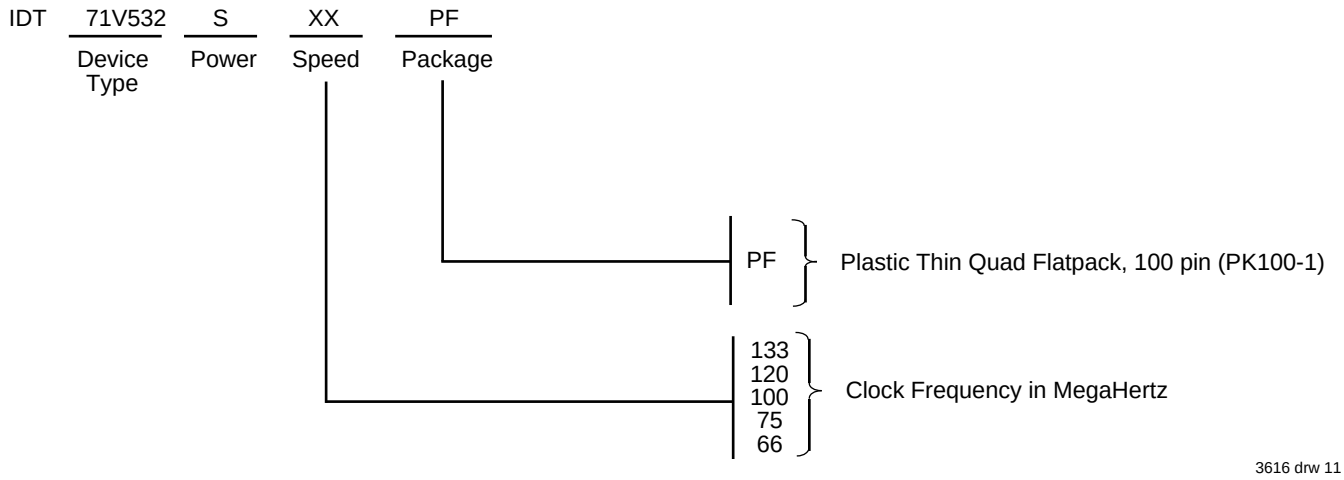

3616 drw 11