HD-20 Right Angle Posted D-Sub Connectors

Listed Certified

Front Metal Shell

0.318 mount. 0.125" PC board posts. Plugs with grounding indents.

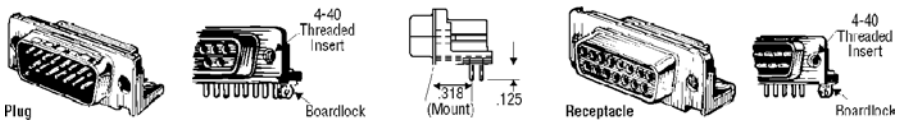

Plugs with Standard .125" Dia. Mounting Holes, without Boardlocks

Stock No.	Mfr.'s Type	No. of Contacts	Plating Code*	EACH 1-24	25-99	100-499
512-0427	747250-2	9	A	**4.19**	**3.77**	**3.15**
512-0429	747236-2	15	A	**3.51**	**3.16**	**2.64**
512-0431	747238-2	25	A	**3.69**	**3.23**	**2.96**
512-0433	747252-2	37	A	**8.75**	**7.87**	**6.56**

Plugs with 4-40 Threaded Inserts without Boardlocks

512-0426	747250-4	9	A	**1.90**	**1.71**	**1.42**
512-0428	747250-3	9	B	**4.01**	**3.61**	**3.01**
512-0432	747236-4	15	A	**5.30**	**4.77**	**3.98**
512-0434	747238-4	25	A	**3.38**	**3.04**	**2.53**
512-0436	747238-3	25	B	**10.09**	**9.08**	**7.56**
512-0438	747252-4	37	A	**9.20**	**8.28**	**6.90**

Plugs with 4-40 Threaded Inserts, with Boardlocks

512-0442	747840-4	9	A	**1.24**	**1.12**	**.93**
512-0444	747840-3	9	B	**1.54**	**1.39**	**1.16**
512-0446	747841-4	15	A	**1.61**	**1.45**	**1.21**
512-0450	747842-4	25	A	**2.81**	**2.53**	**2.11**
512-0138	747843-4	37	A	**3.49**	**3.14**	**2.62**
—	—	—	—	—	—	—

Receptacles with Standard .125" Dia. Mounting Holes, without Boardlocks

Stock No.	Mfr.'s Type	No. of Contacts	Plating Code*	EACH 1-24	25-99	100-499
512-0452	745781-2	9	A	**2.15**	**1.94**	**1.61**
512-0454	745782-2	15	A	**4.92**	**4.43**	**3.69**
512-0456	745783-2	25	A	**3.01**	**2.71**	**2.26**
—	—	—	—	—	—	—

Receptacles with 4-40 Threaded Inserts, without Boardlocks

512-0460	745781-4	9	A	**1.65**	**1.48**	**1.24**
512-0462	745781-3	9	B	**2.02**	**1.81**	**1.51**
512-0464	745782-4	15	A	**2.02**	**1.81**	**1.51**
512-0468	745783-4	25	A	**2.38**	**2.14**	**1.79**
512-0472	745783-3	25	B	**4.67**	**4.20**	**3.50**
512-0474	745784-4	37	A	**4.96**	**4.47**	**3.72**

Receptacles with 4-40 Threaded Inserts, with Boardlocks

512-0476	747844-4	9	A	**1.47**	**1.32**	**1.10**
512-0478	747845-4	15	A	**1.27**	**1.14**	**.95**
512-0480	747845-3	15	B	**1.21**	**1.09**	**.91**
512-0482	747846-4	25	A	**2.22**	**2.00**	**1.67**
512-0484	747846-3	25	B	**2.02**	**1.81**	**1.51**
512-0486	747847-4	37	A	**4.96**	**4.47**	**3.72**

***Contact Platings:** A — .000030 gold on mating end, tin-lead on the termination end, with entire contact nickel underplated; B — gold flash on mating end, tin-lead on the termination end, with entire contact nickel underplated.

HD-20 Straight Posted Connectors D-Sub Connectors

Listed Certified

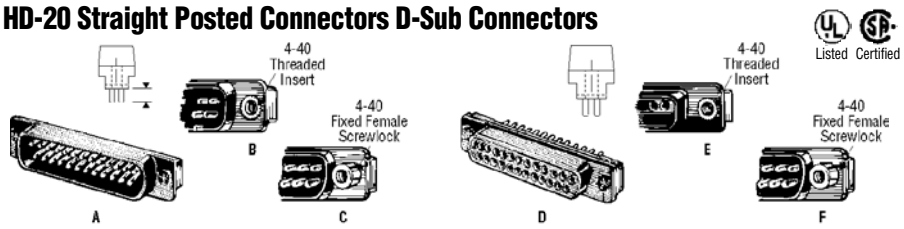

Flame retardant thermoplastic housing. Pin contacts are brass; socket contacts are phosphor bronze. Both have plating options. Intermateable with other HD-20 connectors. UL Recognized and CSA Certified.

All-Plastic

Plugs with .120" Dia. Standard Mounting Holes, .125" Post Length — Fig. A

Stock No.	Mfr.'s Type	No. of Contacts	Plating Code*	EACH 1-49	50-99	100-499
512-0488	208006-2	9	A	**2.88**	**2.59**	**2.16**
512-0490	208007-2	15	A	**4.37**	**3.64**	**3.12**
512-0494	208008-2	25	A	**6.30**	**5.72**	**5.25**
512-0496	208008-1	25	B	**5.06**	**4.60**	**4.22**
512-0500	208009-1	37	B	**7.20**	**6.00**	**5.14**
—	—	—	—	—	—	—
—	—	—	—	—	—	—

Plugs with 4-40 Threaded Inserts, .125" Post Length — Fig.B

512-0502	745051-2	9	A	**4.15**	**3.73**	**3.11**
512-0504	745051-1	9	B	**5.30**	**4.77**	**3.98**
512-0506	745052-1	15	B	**5.96**	**4.96**	**4.25**
512-0508	745053-2	25	A	**8.05**	**7.24**	**6.04**
—	—	—	—	—	—	—
—	—	—	—	—	—	—

Plugs with 4-40 Fixed Female Screwlocks, .125" Post Length — Fig.C

512-0516	745071-2	9	A	**6.26**	**5.63**	**4.69**
512-0518	745071-1	9	B	**5.39**	**4.53**	**3.85**
512-0522	745072-2	15	A	**7.12**	**6.41**	**5.34**
512-0524	745073-2	25	A	**7.83**	**7.12**	**6.53**
512-0526	745073-1	25	B	**7.40**	**6.53**	**5.93**
512-0532	745074-1	37	B	**9.49**	**8.54**	**7.75**
—	—	—	—	—	—	—
—	—	—	—	—	—	—
—	—	—	—	—	—	—

Receptacles with .120" Standard Mounting Holes, .125" Post Length — Fig. D

Stock No.	Mfr.'s Type	No. of Contacts	Plating Code*	EACH 1-49	50-99	100-499
512-0534	207826-4	9	A	**2.99**	**2.69**	**2.24**
512-0536	207826-3	9	B	**2.79**	**2.51**	**2.09**
512-0538	207827-4	15	A	**4.61**	**4.19**	**3.84**
512-0540	207827-3	15	B	**4.52**	**4.11**	**3.77**
512-0542	207828-4	25	A	**4.90**	**4.41**	**3.67**
512-0544	207828-3	25	B	**6.05**	**5.45**	**4.54**
512-0546	207829-4	37	A	**7.30**	**6.57**	**5.47**

Receptacles with 4-40 Threaded Inserts, .125" Post Length — Fig. E

512-0548	207841-4	9	A	**4.15**	**3.73**	**3.11**
512-0550	207841-3	9	B	**3.92**	**3.53**	**2.94**
512-0552	745057-4	15	A	**4.83**	**4.35**	**3.62**
512-0556	745058-4	25	A	**6.12**	**5.51**	**4.59**
512-0558	745058-3	25	B	**5.45**	**4.96**	**4.13**
512-0562	745059-4	37	A	**8.47**	**6.99**	**6.39**

Receptacles with 4-40 Fixed Female Screwlocks, .125" Post Length — Fig. F

512-0566	745076-4	9	A	**4.13**	**3.71**	**3.09**
512-0568	745076-3	9	B	**3.60**	**3.24**	**2.70**
512-0570	745076-6*	9	A	**5.79**	**4.83**	**4.14**
512-0572	745077-4	15	A	**5.30**	**4.77**	**3.98**
512-0574	745077-3	15	B	**6.22**	**5.19**	**4.44**
512-0576	745078-4	25	A	**6.30**	**5.67**	**4.73**
512-0578	745078-3	25	B	**5.26**	**4.73**	**3.94**
512-0582	745078-5†	25	B	**7.51**	**6.26**	**5.36**
512-0584	745079-4	37	A	**11.09**	**10.08**	**9.15**

Front Metal Shell

Shell: Steel, tin plated.

Plugs with .120" Dia. Standard Mounting Holes, .125" Post Length

512-0585	747871-2	9	A	**2.77**	**2.49**	**2.07**
512-0588	747872-4†	15	A	**3.33**	**3.00**	**2.50**
512-0589	745968-2	25	A	**4.28**	**3.86**	**3.21**
512-0591	747375-2	37	A	**6.69**	**6.02**	**5.01**

Receptacles with .120" Dia. Standard Mounting Holes, .125" Post Length

512-0593	747150-2	9	A	**2.86**	**2.57**	**2.14**
512-0595	747299-2	15	A	**3.40**	**3.06**	**2.55**
512-0597	745967-2	25	A	**4.62**	**4.16**	**3.47**
512-0599	747301-2	37	A	**8.21**	**7.45**	**6.15**

***Contact Platings:** A — .000030 gold on mating end, tin-lead on the termination end, with entire contact nickel underplated; B — gold flash on mating end, tin-lead on the termination end, with entire contact nickel underplated. †.170" post length.

HD-20 Right-Angle Posted, PC Board D-Subs

All Plastic Housing

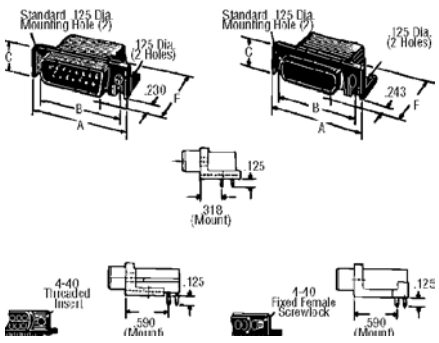

Housing: Black thermoplastic, 94V-O rated. **Contacts:** Phosphor bronze.

.318 Mount, .125" PC Board Posts
Receptacle with fixed female screwlocks.

Stock No.	Mfr.'s Type	No. of Contacts	Plating Code*	EACH 1-49	50-99	100-499
512-0338	745395-2	9	A	**4.53**	**4.08**	**3.40**
512-0344	745397-2	25	A	**10.83**	**9.75**	**8.13**

.590 Mount (Front Load), .125" PC Board Posts
Receptacle with unplated brass threaded inserts.

512-0349	747459-4	9	A	**4.03**	**3.63**	**3.03**
512-0350	747460-4	15	A	**4.56**	**4.10**	**3.42**
512-0352	747461-4	25	A	**9.25**	**7.71**	**6.60**

.590 Mount (Front Load), .125" PC Board Posts
Plug with standard mounting holes (.120").

512-0356	747467-2	9	A	**3.67**	**3.30**	**2.75**
512-5900	747467-1	9	B	**3.15**	**2.84**	**2.36**
512-0358	747468-2	15	A	**7.25**	**6.59**	**6.04**
512-5902	748826-2	25	B	**4.62**	**4.16**	**3.47**
512-0362	747470-2	37	A	**9.28**	**8.35**	**7.58**
512-0364	206971-2†	50	A	**14.93**	**13.58**	**12.44**
512-5904	206971-1†	50	B	**13.67**	**11.39**	**9.76**

Receptacle with standard mounting holes (.120").

512-0366	747459-2	9	A	**3.47**	**3.12**	**2.60**
512-5907	747461-1	25	B	**3.79**	**3.41**	**2.84**
512-0372	747462-2	37	A	**5.21**	**4.69**	**3.91**
512-0374	206973-2†	50	A	**15.73**	**14.30**	**13.11**

Front Metal Shell

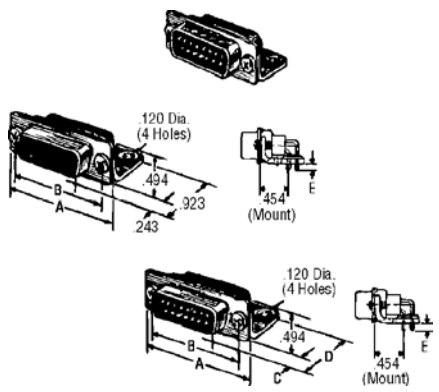

.545" Mount, .125" PC Board Post
Plug with ground indents and standard screws.

512-0388	745352-4	15	A	**11.44**	**9.54**	**8.17**
512-0392	745353-4	25	A	**13.85**	**11.53**	**9.79**
512-0397	745354-4	37	A	**16.40**	**13.67**	**11.72**
512-0398	745355-4	50	A	**20.85**	**17.37**	**14.89**

Receptacle with standard mounting screws.

512-0402	745112-2	9	A	**10.87**	**9.05**	**7.76**
512-0422	745116-2	50	A	**24.32**	**20.27**	**17.37**
512-0424	745116-1	50	B	**21.86**	**18.22**	**15.62**

***Contact Plating:** A — .000030 gold on mating end, tin-lead on termination end, with entire contact nickel underplated; B — Gold on mating end, tin-lead on termination end, with entire contact nickel underplated. †Rear loading version.