Standard Profile Headers — Shrouded Right Angle, Double Row, 0.100" × 0.100 Centers

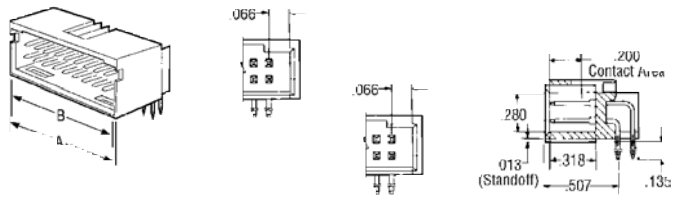

0.025 Square Right-Angle Post — 0.066 End Dimension

Stock No.	Mfr.'s Type	No. of Pos.	Dimensions A	Dimensions B	Plating Code*	EACH 1-99	EACH 100-499
512-2836	103166-1	6	0.412	0.332	1	**.84**	**.75**
512-2838	102617-1	6	0.412	0.332	2	**.73**	**.65**
512-2840	103166-2	8	0.512	0.432	1	**1.09**	**.98**
512-2842	102617-2	8	0.512	0.432	2	**1.52**	**1.37**

0.025 Square Right-Angle Post — 0.150 End Dimension

Stock No.	Mfr.'s Type	No. of Pos.	Dimensions A	Dimensions B	Plating Code*	EACH 1-99	EACH 100-499
512-2848	103167-1	8	0.680	0.600	1	**1.06**	**.98**
512-2850	102570-2	8	0.680	0.600	2	**1.52**	**1.37**
512-2852	103167-2	10	0.780	0.700	1	**2.11**	**1.92**
512-2854	102570-3	10	0.780	0.700	2	**1.09**	**.98**

***Contact Plating:** 1=Duplex C — 0.000030 gold on contact area, 0.000100-0.000200 tin-lead on solder area, with entire post underplated 0.000050 nickel; 2=Duplex D — 0.000015 gold on contact area 0.000100-0.000200 tin-lead on solder area, with entire post underplated 0.000050 nickel; 3=Tin-Lead/Nickel — 0.000100-0.000200 tin-lead over 0.000050 nickel on entire post.

Low Profile Headers

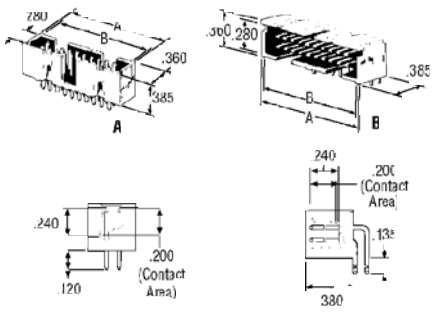

Shrouded with 0.150 End Dimension Double Row, 0.100" × 0.100" Centers

0.025 Square Straight Post — Fig. A

Stock No.	Mfr.'s Type	No. of Pos.	Dimensions A	Dimensions B	Plating Code*	EACH 1-99	EACH 100-499
512-2626	103308-1	10	0.800	0.700	2	**.48**	**.43**
512-2627	103309-1	10	0.800	0.700	1	**.57**	**.51**
512-2625	103308-2	14	1.000	0.900	2	**.63**	**.57**
512-2628	103308-3	16	1.100	1.000	2	**.88**	**.80**
512-2629	103308-5	20	1.300	1.200	2	**.84**	**.76**
512-2630	103309-5	20	1.300	1.200	1	**1.02**	**.92**
512-2631	103308-6	26	1.600	1.500	2	**.99**	**.89**
512-2632	103309-6	26	1.600	1.500	1	**1.20**	**1.08**
512-2633	103308-7	34	2.000	1.900	2	**1.29**	**1.16**
512-2635	103308-8	40	2.300	2.200	2	**1.50**	**1.35**
512-2636	1-103308-0	50	2.800	2.700	2	**1.44**	**1.29**

0.025 Square Right-Angle Post — Fig. B

Stock No.	Mfr.'s Type	No. of Pos.	Dimensions A	Dimensions B	Plating Code*	EACH 1-99	EACH 100-499
512-2634	103310-1	10	0.800	0.700	2	**.63**	**.57**
512-2637	103311-1	10	0.800	0.700	1	**1.81**	**1.63**
512-2638	103310-2	14	1.000	0.900	2	**.84**	**.75**
512-2644	103310-3	16	1.100	1.000	2	**.70**	**.63**
512-2648	103310-5	20	1.300	1.200	2	**1.11**	**1.00**
512-2639	103310-6	26	1.600	1.500	2	**1.34**	**1.20**
512-2640	103310-7	34	2.000	1.900	2	**4.53**	**4.08**
512-2641	103311-7	34	2.000	1.900	1	**5.10**	**4.59**
512-2642	103310-8	40	2.300	2.200	2	**5.10**	**4.59**
512-2643	1-103310-0	50	2.800	2.700	2	**2.10**	**1.89**
—	—	—	—	—	—	**—**	**—**

***Contact Plating:** 1=Duplex C — 0.000030 gold on contact area, 0.000100-0.000200 tin-lead on solder area, with entire post underplated 0.000050 nickel; 2=Duplex D — 0.000015 gold on contact area 0.000100-0.000200 tin-lead on solder area, with entire post underplated 0.000050 nickel; 3=Tin-Lead/Nickel — 0.000100-0.000200 tin-lead over 0.000050 nickel on entire post.

8

Double Row MT Receptacle Connectors

Housings are preloaded with standard pressure contacts on 0.100" × 0.100" centers. The contacts are insulation displacement for termination of discrete wires or ribbon cable with conductors separated. Crimp, snap-in contacts can be used interchangeably with the insulation displacement contacts. Connector covers are sold separately. **Specifications. Housing:** Black thermoplastic, flame retardant. **Contacts:** Copper alloy; duplex plated 0.000030 µ" gold on the contact area, 0.000050 µ" min. tin-lead on termination area, with entire contact underplated 0.000050 µ" nickel. **Rating:** 3 amperes for single contact in free air. UL recognized, CSA certified. **Operating Temperature:** –65°C to +105°C. Mate with posts 0.222"-0.273" in length.

Wire Size 26-22 AWG — Fig. A

Stock No.	Mfr.'s Type	No. of Pos.	A Dim.	EACH 1-99	EACH 100-499
512-6424	102398-1	6	0.300"	**1.68**	**1.51**
512-6000	102398-2	8	0.400"	**2.74**	**2.47**
512-6002	102398-3	10	0.500"	**2.31**	**2.08**
512-6004	102398-4	12	0.600"	**2.74**	**2.47**
512-6006	102398-5	14	0.700"	**3.20**	**2.88**
512-6008	102398-6	16	0.800"	**2.63**	**2.36**
512-6010	102398-7	18	0.900"	**2.79**	**2.51**
512-6012	102398-8	20	1.000"	**4.56**	**4.10**
512-0946	102394-8*	20	1.000"	**2.24**	**2.02**
512-6014	1-102398-1	26	1.300"	**3.25**	**2.92**
512-6426	1-102398-3	30	1.500"	**6.85**	**6.16**
512-6018	1-102398-5	34	1.700"	**7.75**	**6.98**
512-6022	1-102398-8	40	2.000"	**6.78**	**6.10**
512-6026	2-102398-3	50	2.500"	**8.25**	**7.43**

Wire Size 22-20 AWG — Fig. A

512-6040	102448-3	10	0.500"	**2.31**	**2.08**
512-6042	102448-4	12	0.600"	**2.74**	**2.47**
512-6044	102448-5	14	0.700"	**3.20**	**2.88**
512-6046	102448-6	16	0.800"	**3.65**	**3.28**
512-6048	102448-8	20	1.000"	**4.56**	**4.10**
512-6428	1-102448-0	24	1.200"	**5.51**	**4.96**
512-6052	1-102448-1	26	1.300"	**4.71**	**4.24**
512-6068	1-102448-8	40	2.000"	**9.04**	**8.22**

*Unloaded housings.

Front Covers

Latching Cover — Fig. B. Mates with AMPMODU® 4-sided shrouded headers with extraction slot.

Stock No.	Mfr.'s Type	No. of Pos.	L Dim.	EACH 1-99	EACH 100-499
512-6430	102681-1	12	0.600"	**.49**	**.45**
512-6432	102681-4	18	0.900"	**.48**	**.44**
512-6077	102681-5	20	1.000"	**1.36**	**1.24**
512-6079	102681-8	26	1.300"	**.89**	**.81**
512-6085	2-102681-0	50	2.500"	**1.65**	**1.48**

Covers. Low profile for double row MT connectors. **Material:** Black thermoplastic, flame retardant.

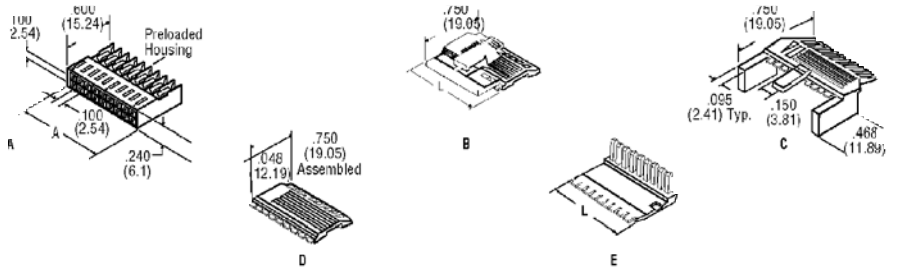

Front Covers (continued)

Ejection Cover — Fig. C. Mates with AMP-LATCH® universal ejection style pin headers with latching ears or AMPMODU® low profile shrouded headers.

Stock No.	Mfr.'s Type	No. of Pos.	L Dim.	EACH 1-99	EACH 100-499
512-6434	102537-5	14	0.700"	**1.26**	**1.15**
512-6087	102537-8	20	1.000"	**.39**	**.35**
512-6436	1-102537-0	24	1.200"	**1.26**	**1.15**
512-6089	1-102537-1	26	1.300"	**.39**	**.35**
512-6438	1-102537-3	30	1.500"	**.43**	**.39**
512-6091	1-102537-5	34	1.700"	**1.26**	**1.15**
512-6093	1-102537-8	40	2.000"	**.95**	**.86**
512-6095	2-102537-3	50	2.500"	**.95**	**.86**

Non-polarizing Cover — Fig. D. For shielded connectors or non-polarizing applications.

512-6440	102541-1	6	0.300"	**.24**	**.22**
512-6097	102541-2	8	0.400"	**.42**	**.38**
512-6099	102541-3	10	0.500"	**.24**	**.22**
512-6101	102541-5	14	0.700"	**.41**	**.37**
512-6103	102541-6	16	0.800"	**.30**	**.27**
512-6105	102541-8	20	1.000"	**1.20**	**1.09**
512-6107	1-102541-1	26	1.300"	**.70**	**.63**

Back Covers — Fig. E

Fig. E — For use with the front covers to the left.

512-6117	102536-3	10	0.500"	**.27**	**.24**
512-6444	102536-4	12	0.600"	**.97**	**.88**
512-6119	102536-5	14	0.700"	**.88**	**.80**
512-6121	102536-6	16	0.800"	**.74**	**.66**
512-6446	102536-7	18	0.900"	**.68**	**.62**
512-6123	102536-8	20	1.000"	**.34**	**.31**
512-6125	1-102536-1	26	1.300"	**.49**	**.45**
512-6131	2-102536-3	50	2.500"	**1.35**	**1.21**

Keying Plugs

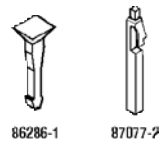

Material: Natural color nylon. For all AMPMODU® receptacles.

Type 86286-1. Plugs into receptacle contact.
512-6070. 1-99 ..... **EACH .13**
100-499 ..... **EACH .11**
Type 87077-2. Plugs directly into housing.
512-6071. 1-99 ..... **EACH .09**
100-499 ..... **EACH .08**

Contact Extraction and Lance Reset Tool

Type 843996-3. For new style locking lance Mod. IV contacts.
512-6073 ..... **EACH 14.47**

Pistol Grip Tool

Type 58074-1. Pistol grip-handle only.
512-9082 ..... **EACH 75.48**
Type 58062-1. Modular head for MT receptacles.
512-9083 ..... **EACH 207.40**